BY ORDER OF THE COMMANDER,
51ST FIGHTER WING

AIR FORCE INSTRUCTION 21-101

51ST FIGHTER WING
Supplement 1

15 AUGUST 2005

Maintenance

AEROSPACE EQUIPMENT MAINTENANCE MANAGEMENT

COMPLIANCE WITH THIS PUBLICATION IS MANDATORY

NOTICE: This publication is available digitally on the AFDPO WWW site at: **http://www.e-publishing.af.mil.**

OPR: 51 MXG/MXGQ (Capt M. Burke)
Supersedes PACAFI21-101_51FWSUP1, 28 March 2002

Certified by: 51 MXG/CC (Col P. Ridgway)
Pages: 75
Distribution: F

AFI 21-101, 1 June 2004, is supplemented as follows: This supplement prescribes policies and procedures governing aerospace equipment maintenance management in the 51st Fighter Wing. It applies to all 51 FW organizations and personnel that maintain aircraft, aircraft systems, equipment, support equipment, and components regardless of AFSC.

SUMMARY OF REVISIONS

This document is substantially revised and must be completely reviewed. This revision is renumbered to align with new version AFI 21-101.

1.1. **Introduction.** This supplement supersedes all previous 51 FW supplements to PACAFI 21-101, as well as any previous waivers or changes.

1.7. **Publications.** All 51 FW supplements and local policies mandated by Air Force and MAJCOM are consolidated in 51 FW Sup 1 to AFI 21-101. The QA is the OPR for maintenance policy guidance and consolidation.

1.10.3.14. A phase dock day is a non-weekend, non-holiday O&M day, unless otherwise spelled out in the pre-dock contract as agreed upon between AMXS and MXS. If it is determined by both parties that weekend work is required above and beyond the normal contracted maintenance time, it will be tracked internally within the Maintenance Group as a phase dock day if both day and swing shift work an entire shift. Weekend duty will not constitute a phase duty day.

2.2.6. All local guidelines for Crash Damaged or Disabled Aircraft Recovery (CDDAR) capability are outlined in 51 MXG OI 21-003, I/W close to MXG approval.

2.3.1.78.1. (Added) See **Attachment 1** for 51 FW Flight Control Program Guidelines

2.5.8. All cannibalization program guidelines are listed in Chapter 18.5 of this supplement

2.7.7.1. See AFI 21-103, *Equipment Inventory, Status and Utilization Reporting*, for local AME/NIE procedures.

3.8.4.1. (Added) The 51 AMXS/MOO/SUPT will review/approve the "Red X" criteria check sheet annually

3.10.6.6.3. (Added) During exercise/contingency operations use the following procedures:

3.10.6.6.4. (Added) In the event the host or the work center cannot reconcile aircraft download data through normal channels (i.e., network reconciliation), the work center will provide a CETADS send file to EMB for the entire (exercise) period via e-mail.

3.10.6.6.5. (Added) In the event the work center cannot deliver aircraft download data via e-mail (send file) due to unforeseen circumstances (i.e., lack of networked resources or real world situations), the work center will place a copy (floppy disk) of the CETADS send file at the end of each flying day at a pre-determined central location for pick up by designated runner for delivery to the EMB host alternate location.

3.10.6.6.6. (Added) At the end of the exercise period, data will be "sent" via send file from the CETS laptop and "received" in the CETADS workstation computer. Data will then be reconciled with the host PRIOR to downloading any aircraft into the CETADS workstation computer.

3.10.6.6.7. (Added) If the CETS laptop is used during non-contingency periods, a send file will be extracted form the CETS laptop and "received" into the CETADS workstation computer and reconciled normally. This will be done at the end of each flying day.

4.6.4.2. (Added) 51 FW fuels Section local policy.

4.6.4.2.1. (Added) Coordinates fuel quantity system maintenance with appropriate AMU maintenance personnel.

4.6.4.2.2. (Added) Troubleshooting and performing operational checks of the fuel quantity system will be performed by AMU technicians with Fuel Cell technician's assistance as required. Ordering fuel quantity probes and/or harnesses is the responsibility of the applicable AMU's maintenance personnel.

4.6.4.2.3. (Added) Replacement of fuel probes and harnesses is the responsibility of the Fuel Systems Repair Section.

4.6.4.2.4. (Added) Fuel systems repair maintenance will only be performed in designated facilities and areas. Previously approved facilities for fuel systems repair maintenance are: Charlie 14, Baker 19R, Gen 20, and hangar 1104. Approval letters are kept on file by the MXS/Fuel Shop. AMU's or phase dock personnel will ensure assigned aircraft are properly configured for fuel systems repair maintenance IAW TO 1-1-3, *Inspection and Repair of Aircraft Integral Tanks and Fuel Cells*, prior to positioning in a fuel systems repair facility/area.

4.6.4.2.4.1. (Added) Designated Repair Facilities and Areas:

4.6.4.2.4.2. (Added) Hangar 1104 is the approved primary fuel systems repair facility. The types of fuel systems maintenance that may be performed there are outlined IAW TO 1-1-3.

4.6.4.2.4.3. (Added) Hard Stand C-14 is an approved alternate fuel systems repair area and shall only be utilized when space in Hangar 1104 is occupied/unavailable. It is an open repair area and is subject to weather conditions such as wind, rain, snow, etc. All field level fuel systems repair maintenance, other than cell maintenance, and extensive maintenance that would call for extended periods of exposing open

fuel tanks, may be performed there. The 51 MXS Supervision or designee shall be the determining authority on use of this area when in question.

4.6.4.2.4.4. (Added) HAS B-19R is an alternate fuel cell repair facility that may be used to perform minor fuel systems maintenance when Hangar 1104 is not available. All fuel systems maintenance except physical entry into fuel tanks may be performed there provided all provisions IAW TO 1-1-3 are adhered to.

4.6.4.2.4.5. (Added) GEN 20 is an alternate fuel cell repair facility, which may be used to perform minor fuel systems maintenance when hangar 1104 is not available. All fuel systems maintenance except entry into fuel tanks may be performed there provided all provisions IAW TO 1-1-3 are adhered to.

4.6.4.2.5. (Added) F-16 Hydrazine (H-70) Designated Areas:

4.6.4.2.5.1. (Added) Recovering F-16 aircraft with a Fired EPU:

4.6.4.2.5.2. (Added) If aircraft is landing on runway 27, it will be parked on taxi-way “B” or its alternate, the hot cargo pad.

4.6.4.2.5.3. (Added) If aircraft is landing on runway 09, it will be parked on taxi-way “F” or its alternate, the hot brake/arming area.

4.6.4.2.6. (Added) Routine F-16 Hydrazine/EPU maintenance Areas:

4.6.4.2.6.1. (Added) The primary F-16 Hydrazine/EPU maintenance area is located in dispersal “A” (Hard Stand A-10 and A-11), and Flow Thru 15 thru 24. This area will be used to perform maintenance of the F-16 EPU to include: H-70 tank replacement, purge of EPU system, EPU quick-disconnect coupling disconnection/re-connection, and mono-propellant operational checkout.

4.6.4.2.7. (Added) AMU Actions Concerning External Fuel Tanks:

4.6.4.2.7.1. (Added) AMU personnel will contact the main fuel systems repair section to coordinate/schedule delivery of tanks requiring repair and will completely drain the tank, properly cover all open stand pipes and canon plugs, and attach an AFTO Form 350, **Repairable Item Processing Tag**, and WCE containing a detailed discrepancy prior to delivery to the external tank maintenance section.

4.6.4.2.7.2. (Added) AMU personnel will properly load an off/on equipment job or cut a Work Center Event (WCE) in CAMS (dependent if pilot detectable or ground related malfunction) against the respective tank serial number.

4.6.6. (Added) F-16 Wheel and Brake Warranty Program: The F-16 brake warranty program requires the AMU’s to maintain a paper copy of AFTO IMT 95, **Significant Historical Data**. Each warranted brake requires an AFTO IMT 95 be returned with defective brakes in order to make a warranty claim.

4.6.6.1. (Added) Improper use of tempilstik, thermomelt, cleaning compounds, greases or oils in the carbon disc brake area will void the warranty.

4.6.6.2. (Added) 51 MXS hydraulic shop will determine if the warranty has been voided. If warranty has not been voided, enter findings and recommendations into PQDR started by crew chief.

4.6.6.3. (Added) The crew chief will:

4.6.6.3.1. (Added) Ensure the AFTO IMT 95 for each new brake is annotated with the date the brake was installed, the aircraft tail number and the current number of aircraft landings. The crew chief will then route the AFTO IMT 95 to the applicable AMU Plans and Scheduling section.

4.6.6.3.2. (Added) Inform the P&S section of any cannibalization of aircraft brakes so the AFTO IMT 95 can be updated and moved to new aircraft jacket file.

4.6.6.3.3. (Added) Initiate PQDR in CAMS whenever a brake fails.

4.6.6.4. (Added) The P&S Section will maintain AFTO IMT 95 in the aircraft jacket file.

4.6.6.5. (Added) MXS tire shop will enter a PQDR into CAMS if the warranty has not been voided on all wheels that have failed.

4.6.6.6. (Added) Product Improvement Manager will screen, process and monitor the warranty PQDR.

4.7.2.18.1. (Added) 51 MXS AGE Flight has three CATs

4.7.2.18.2. (Added) 25 CAT is responsible for maintaining equipment supporting 25 AMU aircraft. Their equipment is identified with a blue dot.

4.7.2.18.3. (Added) 36 CAT is responsible for maintaining equipment supporting 36 AMU aircraft. Their equipment is identified with a red dot.

4.7.2.18.4. (Added) 51 CAT is the 51 FW CAT. They are responsible for maintaining equipment for Munitions, Transient Alert, maintenance backshops, and other wing support requirements. Their equipment is identified with a yellow dot.

4.7.2.18.5. (Added) The 51 CAT is also responsible for maintaining the 51 FW WRM AGE. WRM AGE is identified with a black triangle.

4.7.6.6. AMU Expediters are responsible of accounting for oxygen and nitrogen levels and notifying AGE driver or CAT leader when carts need delivered to a maintenance facility for re-servicing.

4.7.6.7. Functional responsibilities for AGE:

4.7.6.7.1. (Added) AGE Driver Responsibilities:

4.7.6.7.1.1. (Added) Respond to movement requests from 51 AMXS expediters and/or MOC as applicable. Drivers will tow any AGE assigned to the AGE Flight with the exception of lox, oil and hydraulic servicing carts, C1 stands and aircraft axle jacks.

4.7.6.7.1.2. (Added) Coordinate with appropriate AMU expediter or work center supervisor and notify AGE driver when critical AGE is borrowed or loaned to another CAT or AMU.

4.7.6.7.1.3. (Added) Notify appropriate AMU expediter prior to being released for duty (when there is no relief driver).

4.7.6.7.1.4. (Added) Service oil and hydraulic carts with fluid after scheduled 180-day periodic inspections performed by AGE Flight. Prior to dispatch, the AGE Flight will perform an OAP sample on oil carts following 180-day periodic inspections or maintenance of the oil system. An OAP sample will also be performed when a cart is returned from a deployment/TDY.

4.7.6.7.2. (Added) User Responsibilities.

4.7.6.7.2.1. (Added) Assist AGE driver with keeping track of location of assigned low quantity AGE (i.e., canopy crane, cabin leakage testers, B-1/C-1 combo stand, jack trailer, etc.).

4.7.6.7.2.2. (Added) Ensure that any AGE no longer in use is properly prepared and positioned for movement.

4.7.6.7.2.3. (Added) With the exception of equipment located inside the munitions storage facility, users must return MHU-83 and MJ-1B Bomblifts to their respective Combat AGE Team for complete service inspection no more than every 7 days after signing them out.

4.7.6.7.2.4. (Added) Ensure equipment no longer required for use will be properly secured by using personnel before towing to ready line. Proper securing of equipment consists of stowing and capping all hoses, ducts and electrical cables, closing and latching all doors and panels.

4.7.6.7.2.5. (Added) Service oil and hydraulic carts with fluid as needed daily. Ensure hydraulic and oil carts are placed under protective shelters when not in use.

4.7.6.7.2.6. (Added) Expediters ensure that AGE is prepared for pickup. This will include, but not limited to, securing and capping all hoses, cables, ducts, etc. and ensuring equipment is positioned on pavement, at least 10 feet from the aircraft, with tow bar facing the area of entrance. Record any discrepancies on the AFTO IMT 244, **Industrial/Support Equipment Record**, IAW TO 00-20-5, *Aerospace Vehicle Inspection and Documentation*. Notify driver if there are any problems with the equipment.

4.7.6.7.2.7. (Added) Expediters are responsible for accounting for oxygen and nitrogen levels and notifying the AGE driver or CAT leader when carts need delivered to a maintenance facility for re-servicing.

4.7.6.7.2.8. (Added) Coordinate with appropriate CAT on AGE requirements. Notify CAT on the last duty day of the week, any known weekend transient aircraft AGE requirements, or any other AGE requirement.

4.7.6.7.2.9. (Added) Be trained to operate AGE and document AGE training.

4.7.6.7.2.10. (Added) Ensure tow speed, weight and travel limits are not exceeded (as marked on equipment), and pins and locks are installed as required.

4.7.6.7.2.11. (Added) Ensure that identified equipment discrepancies are annotated on equipment AFTO IMT 244, Industrial/Support Equipment Record, and the CAT driver is immediately notified of unserviceable equipment location.

4.7.6.7.3. (Added) Supervision will supply NDI with a list of oil carts in for periodic maintenance or deployed/TDY.

4.7.6.7.3.1. (Added) Ensure a sample is submitted and delivered to the OAP Lab drop box on all oil carts being placed back in service after periodic maintenance or returning from a deployment/TDY.

4.7.6.7.4. (Added) AGE Damage, Misuse and Abuse.

4.7.6.7.4.1. (Added) Incidents will be reported immediately to using organization supervision, QA and 51 MXS supervision.

4.7.6.7.4.2. (Added) Expeditors should immediately report incidents of AGE damage, misuse, or abuse to the applicable CAT Leader or AGE Flight Chief.

4.7.6.7.4.3. (Added) If misuse or abuse is suspected, QA may be notified to conduct an investigation with the respective CAT leader. The investigation findings will be forwarded to the 51 MXS Maintenance Supervisor/Chief and AGE Flight Commander/Chief for appropriate action. Action may include, but is not limited to: (1) recommendation for a report of survey, (2) required re-certification in AGE operation.

4.7.6.7.4.4. (Added) If the investigation or report of survey finds damage due to user abuse or negligence, the using organization is obligated to pay for parts required to repair the damage.

4.7.10. 51 FW AGE sub-pools:

4.7.10.1. (Added) 25 CAT Sub-pool is located on Hardstand A-12.

4.7.10.2. (Added) 36 CAT Sub-pool is located on Hardstand 1 -4 and Hardstand 11.

4.7.10.3. (Added) 51 CAT Sub-pool is located on Delta hardstand and the AMC Ramp.

4.7.10.4. (Added) During inclement weather (i.e., snow, typhoon, floods, etc.) the AGE ready lines and sub-pools will be sub-located to a coordinated hardened aircraft shelter or any approved indoor facility. This will increase AGE reliability and minimize potential hazards for AGE dispatch drivers.

4.8.5.1. See AFI 21-103 for local AME/NIE procedures.

4.9.15.5.1. (Added) Establishes a program to effectively manage awaiting parts pods to return them to service at a minimum of every 90 days. At 60 day point, notify Maintenance Supervision. At 60 day point any CANN/maintenance actions must be approved by the Maintenance Supervisor/Superintendent. At 75 day point, notify Maintenance Squadron Commander and MXG/CC.

4.10.5.7.1. (Added) Maintain AFTO IMT 392, **Parachute Repack, Inspection and Component Record (LRA)**, or equivalent on each parachute with PSN, lot number, DOM, DOI, due date, and installed position.

4.10.5.7.2. (Added) Perform hands-on inventory of all parachute components when they are taken to the shop for maintenance, and correct errors detected in CAMS. Identify errors in CAMS to AMU P&S.

4.10.5.7.3. (Added) Verify PSN data on each drogue chute prior to repack and correct CAMS errors as needed.

4.10.5.7.4. (Added) Provide time change forecast information for all parachute components (including spares) to AMU PS&D IAW TO 00-20-9, *Forecasting Replacement Requirements for Selected Calendar and Hourly Time Change* and TO 00-20-9-1.

4.11.3.5. (Added) A/OA-10 White Area

4.11.3.5.1. (Added) The A/OA-10 white area is defined in TO 1A-10A-2-27MS-1, figure 1-1.

4.11.3.5.2. (Added) Anytime the white area is opened (i.e., removing a cover, seal, panel, stick boot, etc.), all white area rules apply and a white area inspection will be conducted in accordance with TO 1A-10A-2-27MS-1, TO 1A-10A-2-27 Job Guides and this instruction.

4.11.3.5.2.1. (Added) If maintenance cannot be performed because of lack of direction or compatibility between TO's and equipment, the 51 MXG Quality Assurance (QA) office will be notified immediately to resolve the problem with engineering assistance.

4.11.3.5.3. (Added) All maintenance and inspections conducted in the white area will be documented on the aircraft's AFTO IMT 781A, **Maintenance Discrepancy and Work Document**, as follows:

4.11.3.5.3.1. (Added) As a minimum, the following discrepancies will be "**Red X**" entries:

4.11.3.5.3.1.1. (Added) Forward/Aft white area opened to Facilitate Other Maintenance (FOM).

4.11.3.5.3.1.2. (Added) Panel(s) and components removed to gain access to the white area.

4.11.3.5.3.1.3. (Added) CTK inventory due prior to white area closure. (Enter CTK number in AFTO IMT 781A)

4.11.3.5.3.2. (Added) As a minimum, the following discrepancies will be "**Red Dash**" entries:

4.11.3.5.3.2.1. (Added) 5-Level inspection of white area due prior to closure.

4.11.3.5.3.2.2. (Added) 7-Level inspection of white area due prior to closure.

4.11.3.5.3.2.3. (Added) QA inspection of Forward/Aft white area due prior to closure.

4.11.3.5.3.3. (Added) As a minimum, the following discrepancy will be "**Red Diagonal**" entries:

4.11.3.5.3.3.1. (Added) Cockpit vacuum due prior to white area opening.

4.11.3.5.3.4. (Added) All white area maintenance and inspections will be documented on the aircraft's AFTO IMT 95. The following information will be listed for each inspection:

4.11.3.5.3.4.1. (Added) Date.

4.11.3.5.3.4.2. (Added) Location.

4.11.3.5.3.4.3. (Added) Detailed description of maintenance performed.

4.11.3.5.3.4.4. (Added) Rank/Name of technicians, white area inspector, and QA inspector who performed maintenance and inspected the white area.

4.11.3.5.4. (Added) White Area Responsibilities and Procedures:

4.11.3.5.4.1. (Added) Aircraft undergoing white area maintenance will be placed in a hardened aircraft shelter or hangar (flows are not acceptable).

4.11.3.5.4.2. (Added) Personnel engaged in maintenance and inspection of the white area will:

4.11.3.5.4.2.1. (Added) Remove all jewelry.

4.11.3.5.4.2.2. (Added) Remove all items from pockets and hair.

4.11.3.5.4.2.3. (Added) Wear white pocketless coveralls prior to entering and while performing maintenance and inspections in this area.

4.11.3.5.4.3. (Added) The white area access area will, at a minimum, extend from aft of the gun drum bay to the front of the nose section. The access area will be roped off and have signs posted to limit access to authorized personnel only. White area maintenance will be the only maintenance performed in the access area. A two-man maintenance concept will be implemented. The emphasis is on positive Foreign Object (F.O.) control.

4.11.3.5.5. (Added) White Area Maintenance:

4.11.3.5.5.1. (Added) White area certified personnel are the only personnel authorized to open and close white area access panels. Anytime maintenance in the white area is required by an uncertified technician, a white area certified technician will brief the contents of this instruction positive tool/F.O. procedures and accompany the technician at all times.

4.11.3.5.5.1.1. (Added) If a tool box is required for maintenance other than the white area box, procedures in paragraph **4.11.3.5.3.1.3. (Added)** will be adhered to.

4.11.3.5.5.2. (Added) Prior to opening the white area from the cockpit, the technician performing the maintenance will inspect the cockpit for loose or missing objects. If loose or missing objects are discovered, the F.O. potential will be eliminated prior to opening the white area.

4.11.3.5.5.3. (Added) Prior to use in the white area, each maintenance stand will be inspected for condition and cleaned of any debris to eliminate any potential F.O. from entering the white area.

4.11.3.5.5.4. (Added) Stick boot maintenance or replacement will be performed strictly by white area certified personnel.

4.11.3.5.5.5. (Added) Stick shaker repair or replacement will require a white area technician to be present to open and close the stick boot and monitor the maintenance during the procedure.

4.11.3.5.6. (Added) White Area Inspections:

4.11.3.5.6.1. (Added) After maintenance in the white area has been completed, but prior to installation of panels and/or seals the following will be completed:

4.11.3.5.6.1.1. (Added) The technician will inspect the forward or aft white area compartment with a mirror and the brightest white light source available. If the white area inspector (7-Level) or QA inspector are not satisfied with the inspection, they can require additional compartment openings as they deem necessary. All other areas will be inspected in accordance with TO 1A-10A-2-27MS-1.

4.11.3.5.6.1.2. (Added) Notify QA prior to closing the white area to perform a pre-closure F.O. inspection IAW TO 1A-10A-2-27MS-1.

4.11.3.5.6.2. (Added) Quality Assurance will:

4.11.3.5.6.2.1. (Added) Inspect the white area for proper maintenance, F.O., aircraft forms documentation to include AFTO IMT 95 and items emphasized in this instruction.

4.11.3.5.6.2.2. (Added) Inspect the CTK used for white area maintenance for tool accountability prior to white area closure.

4.11.3.5.6.2.3. (Added) Maintain a minimum of two qualified white area inspectors at all times.

4.11.3.5.7. (Added) White Area Personnel Qualifications:

4.11.3.5.7.1. (Added) White area inspectors will, as a minimum, meet the following requirements:

4.11.3.5.7.1.1. (Added) Be thoroughly familiar with A/OA-10A aircraft, TO 1A-10A-2-27MS-1, TO 1A-10A-2-27 Job Guides, and this instruction.

4.11.3.5.7.1.2. (Added) Possess a 7-skill level within their Air Force Specialty Code (AFSC).

4.11.3.5.7.1.3. (Added) Have at least 6 months experience as a white area technician.

4.11.3.5.7.1.4. (Added) Recommended by Aero Repair (AR) Section Chief and approved via squadron's special certification process.

4.11.3.5.7.1.5. (Added) Demonstrate their proficiency by inspecting one white area under the supervision of a certified white area inspector.

4.11.3.5.7.1.6. (Added) Have a working knowledge of all A/OA-10A flight controls.

4.11.3.5.7.2. (Added) White area technicians will, as a minimum, meet the following requirements:

4.11.3.5.7.2.1. (Added) Be thoroughly familiar with A/OA-10A aircraft, TO 1A-10A-2-27MS-1, TO 1A-10A-2-27 Job Guides, and this instruction.

4.11.3.5.7.2.2. (Added) Possess a 5-skill level within their AFSC.

4.11.3.5.7.2.3. (Added) Have at least 6 months experience as an A-10 aircraft technician.

4.11.3.5.7.2.4. (Added) Demonstrate their proficiency by maintenance and inspection procedures for white are under the supervision of a certified white area inspector.

4.11.3.5.7.3. (Added) QA white area inspector will, as a minimum, meet the following requirements:

4.11.3.5.7.3.1. (Added) Be thoroughly familiar with A/OA-10A aircraft, TO 1A-10A-2-27MS-1, TO 1A-10A-2-27 Job Guides, and this instruction.

4.11.3.5.7.3.2. (Added) Be recommended by QA Chief Inspector.

4.11.3.5.7.3.3. (Added) Have a working knowledge of all A/OA-10A flight controls.

4.11.3.5.7.3.4. (Added) Possess a 7-skill level within their AFSC.

4.11.3.5.7.3.5. (Added) Demonstrate their proficiency by inspecting one white area under the supervision of a certified QA white area certifier or AR Section Chief.

4.11.3.5.7.4. (Added) Work center supervisors will ensure that the Special Certification Roster (SCR) codes 568 (white area technician) and 567, (white area inspector) are only certified by qualified personnel.

4.11.7.1.1. (Added) Transient Alert Maintenance has responsibility for directing proper recovery actions on transient aircraft. As such, if there is obvious towing or recovery infractions, Transient Alert personnel will stop said action. Any stopped actions will be relayed to flight supervision. An action will only be restarted once it is in accordance with proper maintenance practices.

4.11.7.1.2. (Added) Ensure all transient aircraft OAP samples with DD Form 2026, **Oil Analysis Request**, and cross-country paperwork are delivered to the OAP Lab, allowing sufficient time for samples to be processed prior to aircraft's departure. Ensure completed cross-country paperwork is received from OAP Lab and placed back in to the transient aircraft's forms/records prior to departure.

4.14.2.8. Approval of priority calibration or repair requests is delegated to the laboratory chief.

4.14.4. The hours of operation for customer service and production scheduling are 0730 to 1200, Monday through Thursday excluding holidays and authorized down days. With prior coordination, the Production Control Section supervisor may extend the hours of operation to accommodate off-base customers on a case-by-case basis.

4.14.4.1.3. Send a letter/E-mail to OWC monitors notifying them of TMDE not delivered within 7 days after the date due calibration. If the TMDE is not delivered within 14 days of the date due calibration send a letter/E-mail to the AMU OIC/NCOIC or equivalent flight supervision notifying them of the overdue TMDE. If the TMDE is not delivered within 21 days of the date due calibration send a letter to the Squadron/Unit Commander notifying them of the overdue TMDE. Maintain a copy of all sent overdue letters in the respective OWC file.

4.14.4.2.7. Send a letter/E-mail to OWC monitors notifying them of TMDE awaiting customer pick-up more than 7 days. If the TMDE is not picked up within 14 days send a letter/E-mail to the AMU/NCOIC or equivalent flight supervision notifying them of TMDE awaiting customer pick-up. If the TMDE is not picked up within 21 days send a letter to the Squadron/Unit Commander notifying them of TMDE awaiting customer pick-up. Maintain a copy of all sent awaiting customer pick-up letters in the respective OWC file.

5.8.19.1.1. (Added) MDSA will perform the forms/CAMS comparisons. They will be responsible for the identification of any forms/CAMS disparities found. The maintenance sections will correct the discrepancies

5.8.19.1.2. (Added) MDSA branch will process and send electronic QBRs on a daily basis for the previous day's documented maintenance actions. Squadron representatives from the 25 AMU, 36 AMU, and MXS will monitor the QBRs for errors and corrections.

5.8.19.1.3. (Added) A DIT spread sheet will be maintained for tracking corrected and incorrect errors.

5.8.19.1.3.1. (Added) A spreadsheet will be created and maintained within the MDSA branch that will enable tracking of errors by type (wrong action taken, wrong work unit code, etc.), work center, squadron, and wing.

5.8.19.1.4. (Added) Squadrons will have 5 calendar days to correct errors in CAMS and have their DIT representative return the corrected QBR errors to MDA *NLT 1600* on the 5th day. The returned copy must reflect the corrected entries.

5.8.19.1.4.1. (Added) Corrections made on the QBR will be validated in CAMS by MDSA. All errors that have been corrected in CAMS by the respective work center will be annotated on the spreadsheet. This last check will enable MDSA to calculate and present both the uncorrected and the corrected error rates.

5.8.19.1.4.2. (Added) Prior to this presentation, a monthly DIT meeting will be held where each squadron representative will be provided a monthly-summarized report. This will allow for the squadron DIT representative to brief their supervision prior to the MXG/OG meeting.

5.8.19.2.2. (Added) Deployment of CAMS Related Hardware and Software. When 51 FW aircraft are deployed to a TDY location where CAMS connectivity exists, all maintenance will be documented in CAMS. A CAMS connection will be established by utilizing GUI, Info-Connect loaded on computers carried to TDY location, or by utilizing computers provided by the host base. When CAMS capable PCs are carried to the TDY location, the CAMS database manager (DBM) from Osan AB should load Info-Connect and CAMS terminal ID's on the computers prior to being deployed. At least 14 duty days prior to deployment/TDY unit POC will contact DBM for required training.

5.8.20.5.16. The CAMS database is backed up to tape daily. CAMS is unavailable for approximately 30 minutes while the save is being accomplished. System backups are scheduled from 0400-0430, but are subject to change according to mission requirements.

5.8.20.5.17.2. Guidelines for manual documentation and Job Control Numbers (JCN) assignment are defined in paragraph 15 of this instruction and **Attachment 3**—Manual Job Numbers.

5.8.20.5.17.3. (Added) The following procedures establish manual JCN for documentation of all maintenance actions performed on aerospace vehicles and associated equipment when the CAMS is down for an extended period of time, or when operating under a manual documentation system while deployed. (See **Attachment 3**)

5.8.20.5.17.3.1. (Added) In the event of CAMS being down for an extended period of time the following manual JCNs/event ID's will be used: (See **Attachment 3**)

5.8.20.5.17.3.2. (Added) JCNs will be used to record support general and other recurring tasks. All agencies requiring JCNs will use only those assigned to their area of responsibility.

5.8.20.5.17.3.3. (Added) The JCN will consist of nine characters with "M" as the first character and the last digit of the year as the second character. The third through fifth character will be the Julian date. The last four will be assigned in accordance with **Attachment 3**.

5.8.20.5.17.4. (Added) Responsibilities:

5.8.20.5.17.4.1. (Added) All supervision levels will comply with JCN assignment rules in TO 00-20-2, Section IV, and Paragraph 4-2.

5.8.20.5.17.4.2. (Added) Authorized maintenance tasks will be assigned a JCN. Maintenance is not authorized without a JCN. Blanket work orders will not be issued, used for minor maintenance needs, or units of work with an unknown start/stop time/date (i.e., shop cleaning, support by shops for periodic needs, or Mockup servicing on a blanket basis).

5.8.20.5.17.4.3. (Added) Use of AF IMT 861, **Base/Transient Job Control Number Register**, is optional for internal distribution/assignment of JCNs in all sections, work centers, flights, and squadrons other than what is defined in this instruction.

5.8.20.5.17.4.4. (Added) Whenever ammunition is loaded or unloaded from an assigned aircraft, an information note entry is required on the aircraft AFTO IMT 781A. The note will include type and quantity of ammunition loaded/unloaded. The serial number of the loading equipment used (Universal Ammunition Loading System or Ammunition Loading Adaptor) is also required.

5.8.20.6.1.1. (Added) Updating/Correcting CAMS: The CAMS database management section will ensure that only personnel that have coordinated a suspense validation (QVR TRIC) authorization letter will be authorized to process suspense's within CAMS. The validation letter must be coordinated through MOS PS&D, who will ensure personnel gaining access to the required CAMS screens understand the importance of timely and accurate data processing. PS&D will perform periodic reviews of installed-on chains, any errors or mis-configurations will be identified by PS&D. Owning work center personnel will make corrections to the CAMS database. All corrections will be validated by PS&D to ensure accuracy. Periodic reviews of the TRIC QVR will be performed by PS&D to ensure work centers are processing their suspense's in a timely manner.

5.8.20.6.1.2. (Added) All TCTO's requiring Kits/Parts, except parts required by inspection type TCTOs', will be ordered on AF IMT 2001, **Notification of TCTO Kit Requirements**, and submitted to the FCC for requisitioning IAW PACAFI 23-203, *Combat Oriented Supply Organization (COSO) Procedures*, AFMAN 23-110, *USAF Supply Manual*, and applicable supplements.

5.8.20.12. Data Integrity: Each squadron should provide as a minimum, three formal DIT members, one primary and two alternates. It's recommended that the AMU's DIT members come from specialists, weapons, and the APG sections. Members representing the maintenance squadron should come from accessories, avionics, and the munitions sections. Members will be appointed by letter.

6.1.2. MOC maintains the local call sign system. Only call signs identified in this instruction should be used. See **Attachment 2**—Local Call Signs.

6.2.3.1. (Added) The 51 FW MOC will prioritize refueling operations by the following list:

6.2.3.1.1. (Added) Distinguished visitor aircraft.

6.2.3.1.2. (Added) Medivac aircraft (C-9, etc.).

6.2.3.1.3. (Added) 33 RQS aircraft.

6.2.3.1.4. (Added) Priority aircraft (as determined by MOC).

6.2.3.1.5. (Added) 51 FW aircraft scheduled as flyers with earlier takeoffs having higher priority.

6.2.3.1.6. (Added) Routine TA aircraft.

6.2.3.1.7. (Added) Aircraft requiring fuels maintenance.

6.2.3.1.8. (Added) Defiles.

6.2.3.1.9. (Added) IFR checks.

6.2.3.1.10. (Added) Phase aircraft.

6.2.3.1.11. (Added) Non-flyers.

6.2.3.2. (Added) All fuel requests must come through MOC except those for the 5th Reconnaissance Squadron. If POL receives requests from anyone other than MOC or 5th Reconnaissance Squadron, they should refer requester to MOC.

6.5.5. (Added) Any changes to assigned call signs must first be approved by squadron maintenance supervision and coordinated through the MOC. Aircraft maintenance units TDY to Osan AB must supply MOC with a complete list of call signs they'll be using. TDY units with call signs already assigned to Osan AB will have to select alternate call signs.

7.2.2. Aircraft Document Review (ADR) Procedures: Document reviews and validations will also be accomplished prior to aircraft deploying TDY and during acceptance of assigned aircraft.

7.2.3.2. AMU PS&D requirements are outlined in Chapter 15 of this instruction.

7.2.3.5. At a minimum, the individuals listed below will review the squadron developed coordination sheet: DCC/Assistant, AMU PS&D, MSL and AMU NCOIC/OIC

7.2.3.6. (Added) The Automated Records Check (ARC) may be used during prolonged CAMS down-time.

7.2.3.7. (Added) MSL will:

7.2.3.7.1. (Added) Ensure all aircraft discrepancies requiring parts in AFTO IMT 781's, **ARMS Aircrew/ Mission Flight Data Document**, have a valid due-out supply document number that matches the CAMS 380 screen data.

7.2.3.7.2. (Added) Notify the crew chief of on-hand parts in TNB.

7.2.3.7.3. (Added) Change the aircraft discrepancy deferred code in CAMS to AWM status, for those discrepancies that can't be corrected by the crew chief or specialist in a reasonable amount of time and for which parts are on hand.

7.2.3.7.4. (Added) Sign coversheet stating that the supply portion of DR has been complied with.

7.2.3.8. (Added) The DCC or assistant will:

7.2.3.8.1. (Added) Ensure the following AFTO IMT 781A entry is entered in the aircraft forms using a red dash: "14 Day Aircraft Document Review Due".

7.2.3.8.2. (Added) Hand-carry the aircraft forms and ADR package (see Chapter 15) to all functions to accomplish the ADR. ADR accomplishment should follow established AMU routing procedures. The

order of the accomplishment should not be allowed to become a hindrance to the expedient accomplishment of the ADR.

7.2.3.8.3. (Added) Complete the Work Center event to the scheduled JCN. Review the work order using CAMS screens 907, 914 and AFTO IMT 781A entry IAW TO 00-20-2.

7.4.2. (Added) Repeat/Recur and CND Discrepancies Clearing Procedures: When clearing a Repeat/Recur and CND discrepancy the AMU Supervision will ensure an adequate corrective action was accomplished and the following procedures are strictly adhered to:

7.4.2.1. (Added) The discrepancy will be investigated using the most highly qualified technician(s) available. In addition, aircraft forms, CAMS and other source documents will be thoroughly reviewed using a minimum 90-day look back. Consult with AFETS/Tech Reps/System Program Office (SPO) for additional technical assistance as necessary.

7.4.2.2. (Added) Parts removed for most probable cause will be bench checked if capability exists, and AFTO Form 350 tag will be annotated with Repeat/Recur or CND (in red lettering) as applicable.

7.4.2.3. (Added) On second Repeat/Recur and subsequent occurrences the MOO/MS will review the corrective action prior to next flight. On the third repeat of a "safety of flight item" and/or weapons malfunction aircraft will be impounded.

7.4.2.4. (Added) Personnel who clear Repeat/Recur and CND malfunctions must be authorized on the SCR.

7.5.2. (Added) See Para. **7.4.2. (Added)-7.4.2.4. (Added)** of this supplement

8.19. See paragraph **13.6.1. (Added)** for Local Manufacture Procedures

10.16.9. (Added) Technical Order Management.

10.16.9.1. (Added) TOs will receive a complete List of Effective Pages (LEP) check annually. A routine LEP will be conducted whenever a change is received. This check will include all applicable Technical Order Page Supplements (TOPS) and supplements. Compliance will be documented at the end of the LEP in the following formats; Annual check - Annual C/W, mm-yy (Jan 99), reviewers initials Routine check - LEP C/W, dd-mm-yy (15 Jan 99), reviewers' initials.

10.16.9.2. (Added) TODA will develop a schedule for ensuring all technical orders are checked annually.

10.16.9.3. (Added) CD-ROM Media.

10.16.9.3.1. (Added) CD-ROMs may be filed in the main TO file or a separate CD-ROM file may be created. If filed in the main TO file it will be merged into the book a paper copy of the first TO on the CD-ROM would normally occupy. A DD Form 2861, **Cross-Reference**, will be used to represent any other TOs that might be on the CD-ROM, it will be placed in the file at the location the TO would normally occupy. If a separate CD-ROM file is created, a DD Form 2861 for each TO will be placed in the main TO file.

10.16.9.3.2. (Added) CD-ROM media will receive routine and annual TO index checks.

10.16.9.3.3. (Added) Reproduction of an entire TO from a CD-ROM is discouraged due to the requirement of paper copy updates that must be made each time a new CD-ROM is received. All paper copies of TOs made from CD-ROM will be marked "For Reference Only". (All paper copies will be destroyed after use).

10.16.9.3.4. (Added) Destroy superseded CD-ROMs according to chapter 3 of TO 00-5-2.

10.16.9.3.5. (Added) TOs on CD-ROM may have paper Rapid Action Changes (RAC), Interim Operational Supplements (IOS), Interim safety Supplements (ISS), HQ PACAF and local supplements. The following will be typed in the remarks section of each DD Form 2861 used to represent a TO on the CD-ROM; **"RAC, IOS, ISS, HQ PACAF and local supplements to this TO will be reviewed prior to use"**.

10.19.1.1. (Added) Crew Requirements.

10.19.1.1.1. (Added) The OG/CC will be the waiver authority to increase number of FCF crews above four per squadron. Submit justification letter to OG/CC for approval. If approved, the requirement to exceed four FCF crews will be reviewed/updated annually. A copy of the letter will be maintained in the squadron and QA FCF continuity book. Include DEROS and initial qualification date on certification letter.

10.19.1.2. (Added) FCFs will be performed in lieu of high-speed taxi checks (faster than normal taxi speed).

10.20.1. (Added) The collaborative coordination of the AMU OIC, Flying Squadron Director of Operations and Maintenance Operations Officer will determine when aircraft will require an OCF. The AMU OIC/NCOIC should be the focal point for all coordination requirements and may delegate efforts to the AMU Production Superintendent.

10.20.1.1. (Added) The Production Superintendent will:

10.20.1.1.1. (Added) Conduct a forms review to ensure adequate actions have been taken to preclude recurrence of the condition necessitating the OCF.

10.20.1.1.2. (Added) Notify QA of the OCF requirement, aircraft tail number, reason for OCF, and scheduled take-off time.

10.20.1.1.3. (Added) QA will conduct a forms review to ensure valid measures have been taken to preclude recurrence of the discrepancy and ensure proper documentation.

10.22. High speed taxi checks are not authorized at Osan Air Base.

10.23.1.11. (Added) AMU Plans and Scheduling will:

10.23.1.11.1. (Added) Notify the MXG/QA weight and balance manager 30 days prior to the due date of any aircraft requiring a weight check.

10.23.1.11.2. (Added) Coordinate with the QA weight and balance manager to schedule adequate downtime to weigh aircraft.

10.23.1.11.3. (Added) Notify the MXG/QA weight and balance manager at least 5 duty days prior to any Programmed Depot Maintenance (PDM) departures or transfers for coordination of weight and balance requirements.

10.23.1.12. (Added) Time Compliance Technical Order (TCTO) monitors, and P&S will notify the MXG/QA weight and balance manager of all TCTO'S, and modifications over 2 pounds on aircraft with a basic weight under 25,000 pounds, and items over 5 pounds on all other aircraft with a basic weight above 25,000 pound

10.23.1.13. (Added) The MXG/QA weight and balance manager will perform a chart A inventory before the aircraft is weighed.

10.23.1.14. (Added) AMU Production Superintendent will:

10.23.1.14.1. (Added) Coordinate with the QA weight and balance manager to schedule actual time of aircraft weigh.

10.23.1.14.2. (Added) Ensure the appropriate panels are removed by maintenance personnel to perform the chart A inventory.

10.23.1.14.3. (Added) Provide AMU/Flight support as needed during chart A inventories.

11.2.3. The impoundment official appointment letter must contain rank, name, AFSC, and DEROS of the individuals appointed. QA will maintain a copy of the letter on file.

11.2.4. While deployed, the ranking maintenance officer will have impoundment release authority for deployed aircraft or equipment (unless an Expeditionary MXG exist). The maintenance officer will notify 51 MXG/CC of an impoundment action within 12 hours of occurrence.

11.3. The following conditions require aircraft/equipment impoundment: (Notify Wing Safety immediately for pound sign (#) items to determine if the incident is reportable.)

11.3.2.1. (Added) #F-16 dual-flight control failures or uncommanded digital back up engagements resulting in an in-flight emergency.

11.3.2.2. (Added) #Any throttle binding or suspected throttle binding.

11.3.2.3. (Added) #Uncommanded flight control inputs.

11.3.3.1. (Added) #Inadvertent/Uncommanded release—the release of a munitions item which was not aircrew initiated, or release from a station not selected. If impulse cartridges have not fired, then the rack/TER/launcher/pylon will be impounded.

11.3.3.2. (Added) Multiple release (release of munitions in a greater quantity than that selected).

11.3.4.1. (Added) #Third repeat discrepancy of safety of flight items and/or weapons malfunctions.

11.3.4.2. (Added) #Aircraft/equipment with suspected or confirmed fluid contamination.

11.3.4.3. (Added) #Aircraft/equipment involved in a dropped object incident in which aircraft damage occurs.

11.3.4.4. (Added) #Abnormal EPU activation/operation in air or on ground (F-16 Activate TAO).

11.3.4.5. (Added) #Any abnormal main fuel shutoff valve operation in flight or on ground (F-16 Activate TAO).

11.3.4.6. (Added) Aircraft involved in border violations.

11.3.6.5.1. (Added) #Engine loss of thrust, flameout, stalls on ground or in flight. (F-16 Activate TAO).

11.3.6.6.1. (Added) #Any FO to an engine to include bird strikes that are suspected or confirmed of entering the engine inlet which cause damage or result in extensive tear-down for cleaning and/or operational check (e.g., ECS ram air ducts, gun system, etc.).

11.3.10.1. (Added) #Aircraft involved in aircrew physiological incidents such as; hypoxia, oxygen.

11.3.12. (Added) The Production Superintendent/Expediter will immediately notify MOC that an item is lost and the affected aircraft is placed on a 1 hour "Quick Freeze" in lieu of immediate impoundment. MOC will notify QA of the "Quick Freeze" and the time it was initiated.

11.3.13. (Added) During the "Quick Freeze" and/or impoundment, aircraft will not be operated or moved unless necessitated by safety considerations.

11.3.14. (Added) If after a 1-hour search the lost or missing item is not found, the aircraft must be impounded following normal impoundment procedures.

11.5.3. The impoundment official will use 51 FW procedures in **11.5.13. (Added)** through **11.5.19. (Added)** of this publication. The procedures apply equally to aircraft and equipment

11.5.13. (Added) Quality Assurance will:

11.5.13.1. (Added) Insert an AFTO IMT 781A impoundment preprint (with red border) in front of the active AFTO IMT 781, (numbered 1a, 1b, etc). Additionally, QA will insert a 51 FW IMT 57, **Aircraft/ Equipment Impoundment Checklist**, into the aircraft forms binder. For equipment forms and maintenance flow packages insert the 51 FW IMT 57 and make the following entry: "Equipment Impounded by the 51 MXG/CC for "REASON."

11.5.13.2. (Added) Notify the wing FOD NCO of confirmed/suspected bird strikes or of any damage/ incident related to FO or dropped objects.

11.5.13.3. (Added) Review the AFTO IMT 781 series/applicable equipment forms, and all paperwork for adequate corrective actions and completeness of required data.

11.5.13.4. (Added) Ensure F-16 SPO Checklists are completed by the impound official. Currently, the following checklists are in existence from the Falcon Hotline website (**https://f16.wpafb.af.mil/org/asc/ypl/ypld/Checklists/checklists.htm**): Tire Failure, EPU Activation, Loss of Thrust (Impound Required), Main Fuel Shut Off Valve (MFSOV), and Unexplained Flight Maneuvers Checklist (Impound Required).

11.5.14. (Added) Squadron will:

11.5.14.1. (Added) Not perform maintenance on aircraft or equipment until released for maintenance by the impoundment official (Exceptions: Installing protective devices and covers, oil servicing check, and taking JOAP samples are authorized).

11.5.14.2. (Added) Assemble applicable Flight Control Maintenance Team (FCMT) IAW **Attachment 1** of this supplement, when the AMU OIC/Chief or the impoundment official deems necessary.

11.5.14.3. (Added) Submit PQDRs on parts when required.

11.5.15. (Added) Impoundment Official/Team Chief will:

11.5.15.1. (Added) Isolate aircraft by using cones, rope and a placard stating "Aircraft Impounded." Isolate equipment by affixing a placard stating "Equipment Impounded." For equipment that has a control panel, the placard will be affixed as close as possible to the panel. Impounded equipment will be isolated from equipment that is serviceable or awaiting maintenance. Monitor maintenance actions until completion of impoundment. Report any impoundment integrity violations to the squadron supervision. Support sections are responsible for maintaining the security of impounded equipment.

11.5.15.2. (Added) Determine what maintenance can be performed and ensure proper documentation of authorized maintenance actions are annotated in the AFTO IMT 781A or appropriate equipment forms/

maintenance work package. Additionally, conduct a preliminary investigation; ensuring no maintenance is performed that may hinder proper investigation except to safe the aircraft or secure equipment.

11.5.15.3. (Added) Ensure MOC has notified wing safety (who will determine whether a formal investigation needs to be accomplished). This does not preclude the safing of aircraft systems or downloading of live ordinance. Do not alter, disrupt, tear down, or test parts until cleared by the wing safety investigating officer. Work closely with the safety/interim investigating officer to ensure the timely repair of equipment while preserving valuable evidence.

11.5.15.4. (Added) Not release parts from an aircraft impounded for a safety investigation without the Wing Safety investigating officer's authorization. Once the safety investigating officer releases the part from the investigation, the impoundment official may continue IAW standard impoundment procedures.

11.5.15.5. (Added) Use all sources necessary (AFETS, etc.) and assemble the appropriate technicians, including the Dedicated Crew Chief (DCC). Only highly qualified technicians will be appointed to work impounded aircraft.

11.5.15.6. (Added) Assemble the FCMT as necessary.

11.5.15.7. (Added) Review aircraft/equipment records and analysis data to identify any history or contributing discrepancies.

11.5.15.8. (Added) Control and limit access to impounded aircraft/equipment and historical records (Jacket Files).

11.5.15.9. (Added) Ensure all recoverable data is collected prior to operating systems that may dump stored information.

11.5.15.10. (Added) Verify the status of all parts removed and that they are sent to 51 MXS shops for bench check. An AFTO Form 350, Repairable Item Processing Tag, bordered in red with the word "IMPOUNDED OPR: (Impoundment Official Name), x (phone)" written on the bottom of the tag will be attached with each part removed from an impounded aircraft/equipment. Coordinate with the QA office and contact the 51 MXS work center prior to determining the disposition of any parts. All suspected parts should be considered for deficiency reporting through the product improvement office.

11.5.15.11. (Added) Ensure all components requiring impoundment are listed on the 51 FW IMT 57 impoundment checklist with assigned control number prior to clearing the aircraft impoundment.

11.5.15.12. (Added) Review the applicable maintenance forms for accuracy and adequacy of maintenance and corrective action. Sign off and initial the symbol block for the forms review.

11.5.15.13. (Added) Report to AMU/Flight for forms review process.

11.5.15.14. (Added) Report to QA for forms review process and accompany QA during the release process.

11.5.15.15. (Added) Notify MOC when impoundment is terminated and provide QA the original signed 51 FW IMT 57 and original PACAF IMT 140a, **Lost Tool-Chit Investigation Work Sheet (V2)**.

11.5.15.16. (Added) Ensure that the preprinted AFTO IMT 781A for impoundment and a copy of the PACAF IMT 140a (if applicable) is filed in the aircraft's jacket file.

11.5.15.17. (Added) Ensure PQDR's are submitted when deficiency exists

11.5.15.18. (Added) Ensure F-16 SPO Checklists are completed and submitted to the SPO. Currently, the following checklists are in existence from the Falcon Hotline website (**https://f16.wpafb.af.mil/org/asc/ypl/ypld/Checklists/checklists.htm**): Tire Failure, EPU Activation, Loss of Thrust (Impound Required), MFSOV, and Unexplained Flight Maneuvers (Impound Required)

11.5.16. (Added) Engine Impoundment:

11.5.16.1. (Added) Aircraft impoundment, which can be positively identified to the engine, shall be released with a statement in the "Corrective Action" block stating "Aircraft Impoundment cleared and transferred to engine serial number XXX." Release can only be accomplished once the engine is removed from the aircraft. Once the engine is removed from the aircraft, a new IO will be appointed. Follow procedures in paragraph **11.5.13. (Added)** to **11.5.15. (Added)** to clear impoundment. Engines will only be released from impoundment after the functional run is complete or are met.

11.5.17. (Added) AGE Impoundment: Follow procedures **11.5.13. (Added)** through **11.5.15. (Added)** of this publication with the following additional guidance:

11.5.17.1. (Added) AGE suspected of contamination will be secured and cordoned off immediately. An impoundment officer or NCO will be appointed to ensure the following procedures are accomplished:

11.5.17.1.1. (Added) AGE flight personnel will annotate the AFTO IMT 244, or AFTO IMT 245, **Industrial/Support Equipment Record (Continuation Sheet),** stating reason for impoundment. The "SYM" block will contain a "Red X." "Impoundment" will be entered in red bold letters in the "Discrepancy Block." Sterile fluid samples will be taken immediately for analysis.

11.5.17.1.2. (Added) Notify affected AMUs of possible AGE contamination through MOC.

11.5.17.1.3. (Added) Determine any aircraft that could be possibly contaminated using all available documentation.

11.5.17.1.4. (Added) Notify AMUs of fluid sample results as soon as they are known.

11.5.18. (Added) Equipment impoundments for support equipment, such as cables, lifting devices, or other items that could catastrophically fail and cause injury to personnel or damage to equipment, will be impounded similar to engines and AGE.

11.5.19. (Added) Procedures for impounded equipment leaving Osan, AB.

11.5.19.1. (Added) When determined an impounded engine/equipment will require repair, inspection or testing at another location due to limited capabilities within the 51 FW or the equipment is to be turned into supply for PQDR, the impounded item will be released from impoundment prior to shipment/transfer.

11.5.19.2. (Added) The impoundment official will ensure the Comprehensive Engine Management System (CEMS) or applicable documents accompanying equipment to the repair facility will be annotated: "Released from Impoundment for the sole purpose of further investigation, troubleshooting and/or repair at, repair facility name." A copy of the 51 FW IMT 57 (with releaser signature) will accompany the equipment when shipped off station.

13.2.1.1. Weapons load crew crimpers, die, and or lead seals are not authorized at Osan. Additionally, engine blade blending blue dye is not authorized at Osan. If shops need to mark damage areas, they will use a suitable substitute (e.g. GG-M-00114 marker). Also see para. **13.5.2.**

13.2.1.2. Equipment custodians will inventory and transfer responsibility of equipment accounts 60 days prior to their DEROS. A letter listing equipment account number, inventory accomplishment and transfer

will be signed by the outgoing and incoming custodians and forwarded to the unit commander and 51 LRS equipment management section.

13.2.1.3. Each work center will track all broken warranted tools for negative trends and problem items.

13.2.1.4. List by noun and authorized quantity all spare/replacement tools. This list will be approved by the section supervisor or support NCOIC and kept in the CTK continuity folder. Personnel authorized to purchase tools will be appointed in writing.

13.2.1.5. See para. **13.5.2.1.4. (Added)**

13.2.1.6. See para. **13.8.1.11. (Added)**

13.2.1.7. See para. **13.4.1.**

13.2.1.8. See para. **13.3.4.13.**

13.2.1.9. Rag Control Procedures: Rags will be accounted for in the same manner as any tool and reported as a lost tool or item when unaccounted for. The standard for rags is that they be red in color with stitched edge borders, square by design with a side length between 7 and 11 inches when new. Stains and discoloration will not be used to determine serviceability as long as the original color of the rag can be readily determined. Rags that are torn to the point that pieces may separate from the rag will be treated as a broken tool until properly discarded and accounted for.

13.2.1.9.1. (Added) Complete accountability of rags issued individually within the Support Sections will be accomplished at the end of each maintenance shift and accountability procedures within CTKs will follow the same guidelines as tools.

13.2.1.9.2. (Added) Pre-packaged rags placed inside of CTKs will have the number of rags in the package clearly marked on the package and annotated in master CTK listing.

13.2.1.9.3. (Added) Pre-packaged sets of rags will consist of no more than ten rags per packaged set.

13.2.1.9.4. (Added) Rags identified as “clean replacement rags” or “dirty unserviceable rags” need not be marked but must be inventoried at the end of each shift, even when not issued and must be secured to prevent unauthorized access. Access will be limited to Support Section and CTK monitors.

13.2.1.10. Tools purchase will be limited to (list position; i.e. Support Equipment Custodian and Alternate only or CTK day shift supervisor only; who ever you want to purchase tools).

13.2.1.11. See para. **13.6.1. (Added)**

13.2.1.12. Depot teams, factory representatives, and contract field teams:

13.2.1.12.1. (Added) Will be briefed by work center supervisor on local CTK procedures contained in this instruction before work is performed on aircraft or equipment.

13.2.1.12.2. (Added) Will provide QA a listing of all equipment and CTKs to be used.

13.2.1.13.3. Personnel will inventory tool kit, they will then have a second party inventory and sign in their tools prior to leaving work.

13.2.1.13.3.1. (Added) Tools will be verified against TAS to ensure that all tools issued to the individual have been returned.

13.2.1.13.3.2. (Added) Documentation procedures will be clearly defined by the shop, in advance, if the individual who performs the inventory is not loaded into TAS. These records must be maintained for a minimum of 1 year.

13.3.2.1. (Added) Develop and maintain a continuity folder for the tool room or work center. The folder will contain as a minimum the following: Appointment letters, Master CTK contents listings, inspection plans and documentation if not automated, completed PACAF IMT 140a (to be kept for a period of 1 year from the date of initiation), and any approved flight operating procedures or additions to this instruction.

13.3.4.4. All broken and removed tools will be documented on PACAF IMT 140, **CTK Inventory Inspection Log (V2)**; a copy will remain with the CTK at all times, and one copy with the CTK folder. These copies must match at all times.

13.3.4.6. The shadowed layout, label, or silhouette of each tool, item of equipment, or consumable in a CTK that is permanently removed needs to be filled in or marked as deleted, and deleted from the MIL.

13.3.4.7. Ensure spare bulbs are removed from flashlights. Spare bulbs stored in CTKs will not be stored inside the flashlight. Easily removable buttons, will be taped over or removed. If removed, it must be identified as such on the MIL.

13.3.4.12. Clips removed from tools will be annotated on the MIL.

13.3.4.13. Personal tools will not be “used” or “possessed” within a maintenance environment (i.e. leathermans, gerbers, and flashlights). Individuals may however use personal “checklist pouches”, reflective belts, ear defenders, headsets, and wet weather gear, but items must be marked with individuals first initial, last name, and last five of SSN (i.e., J. Doe, 12345).

13.3.4.14.1. (Added) Those who require explosion-proof lights will inspect and document these inspections IAW TO 35F5-1-2. Also, only those explosion-proof lanterns and extension lights, which have approval for use in specific hazardous locations, shall be used in hazardous locations. Hazardous locations are described in TO 1-1-688.

13.3.4.14.2. (Added) Work center supervisors will initiate AF IMT 2426, **Training Request and Completion Notification** to submit names of qualified technicians IAW TO 35F5-1-2 paragraph 1.3b, to inspect explosion-proof lights. Form will be sent to the Maintenance Superintendent and he/she will ensure the Form is processed through the unit-training manager to update the special certification roster.

13.3.5. (Added) Foreign Object Damage (FOD) Prevention Procedures:

13.3.5.1. (Added) Locally manufactured FOD bags will be added to the master inventory sheet and will be attached to or placed in each CTK used for flight line maintenance. They must be emptied when the CTK is turned in. Foreign objects will be removed from CTK at job completion and prior to turn in.

13.3.5.2. (Added) When plastic bags or other similar containers are used to store items, the bags must be labeled to identify the items, their quantity, and the CTK number or storage location.

13.3.5.3. (Added) Bench stock items carried out on a work order will be placed in a container (screw bag, zip-lock bag, etc.). This container may be placed in the CTK. These items must be controlled by showing that when a new bolt, nut, washer, etc., is used, an old one is accounted for by utilizing the FOD bag and checking its contents and quantity after completion of the work. After completing the work order, remove any unused items from the CTK and return them to bench stock.

13.3.5.4. (Added) All tools/items assigned to vehicles not provided by manufacturer, i.e., flashlights, ice scraper, tire pressure gauge, hearing protection, chocks, fire extinguisher, and F.O. cans, will be etched or otherwise permanently marked with the vehicle registration number and will be annotated in appropriate vehicle forms. Wrenches, sockets and other tools provided by manufacturers will be removed from the vehicle. If lost or misplaced, these items will be reported in accordance with lost tool/item procedures.

13.4.1. The WWID designator will be etched as outlined below on tools. To keep re-etching of tools to a minimum, the four-digit WWID may be etched/marked as close as possible to the original CTK markings. The WWID may be before, after, above or below the original markings, as long as it is clearly discernable from the original markings. When the tool is completely re-etched or replaced through attrition, the WWID will be included in the CTK number as outlined below. A dash "-" may be used to separate portions of a WWID to aid in discerning tool storage location. Dashes are not an authorized character for use in WWIDs. Any 51 FW unit not listed on the WWID table below will etch their tools with their group and four digit office symbol.

51st Aircraft Maintenance Squadron			**51st Maintenance Operations Squadron**	
25 AMU	**OPAA**		QA	**OPQA**
36 AMU	**OPAB**		AFREP	**OPGF**
51st Maintenance Squadron			WSS	**OPML**
Accessories	**OPMC**		**25th Fighter Squadron**	
Age Flt	**OPMG**		Life Support	**OPFA**
Avionics	**OPMV**		**36th Fighter Squadron**	
Fabrication Flt	**OPMF**		Life Support	**OPFB**
Metals Tech	**OPFM**		**55th Airlift Flight**	
Structures	**OPFS**		Life Support	**OPDO**
Survival	**OPFV**		**33rd Rescue Squadron**	
NDI	**OPFN**		33rd RQS	**OPAD**
Maintenance	**OPMT**		**5th Reconnaissance Squadron**	
Propulsion	**OPMP**		5th RS	**BD5R**
TMDE	**OPMD**		**51st Munitions Squadron**	
Phase	**OPMA**		Armament	**OPMR**
Transient Alert	**OPTT**		Munitions	**OPMW**
Wheel & Tire	**OPTW**		**51st CES Barrier Maintenance**	
Fuels	**OPCF**		* 51CES Barrier Maint	**OPBM***
Egress	**OPCG**			
Hydraulics	**OPCP**			
E & E	**OPCE**			

*This shop not required to use TAS by AFI 21-101. Tools will be etched with this code!

13.4.2. Attaching a chit or tag with (MIL SPEC) of the type of grease used is an acceptable option.

13.4.4.1. (Added) Include the TMDE identification number on the MIL.

13.4.4.2. (Added) Test equipment and special tools that are listed on a Customer Account/Customer Receipt Listing (CA/CRL), and assigned to a CTK or storage location, will be identified on the inventory listing.

13.4.4.3. (Added) When plastic bags or other similar containers are used to store items, the bags must be labeled to identify the items, their quantity, and the CTK number or storage location.

13.4.7. (Added) Small tools or items that cannot be marked (drill, bits, Allen wrench sets, apexes, etc.) are maintained in a container. Individual kits (i.e., testers, meters, etc.) within a CTK will be marked but will also include a listing of parts and tools within that kit.

13.4.8. (Added) Feeler gauges will be marked with the number of blades with tool.

13.5.1.2. If TAS is unavailable, additional sets of special chits may be used for tool/equipment control. These special chits will be painted as follows: RED to track broken tools removed from service, YELLOW to track items removed for calibration (i.e., PMEL), and WHITE to track items signed out on hand receipts (AF IMT 1297, **Temporary Issue Receipt**).

13.5.2. During tool room shift inventories, TAS will be checked to ensure all tools from the prior shift have been returned to the tool room. Tools overdue turn-in will be identified and located. Tools requiring flight line turnover will follow procedures outlined in **13.5.2.1.4. (Added)** all other tools must return to the tool room after each shift.

13.5.2.1.1. (Added) CTK will be inventoried immediately after use. Once a CTK is in use on a specific aircraft, it will be inventoried at the job site when the job is completed or personnel must leave the aircraft.

13.5.2.1.2. (Added) Tools will not be removed from a dispatchable CTK and used at another job site.

13.5.2.1.3. (Added) Personnel will maintain control of their assigned CTK at all times. CTKs will be locked when unattended.

13.5.2.1.4. (Added) Guidance for flight line turnover of CTK/Tool/Equipment items. Production Superintendents can authorize flight line turnover of CTK/Tool/Equipment items to provide continuity on aircraft requiring extensive maintenance. At no time should this authorization continue beyond a 24-hour period. In all cases a TSgt or above will act as third party to ensure all items are accounted for. During contingencies, exercises, and sortie surge operations; the appropriate Maintenance Operations Officer or Maintenance Superintendent can authorize blanket flight line turnovers following the procedures outlined below.

13.5.2.1.4.1. (Added) Flight line turnover procedures will be as follows:

13.5.2.1.4.1.1. (Added) The individual accepting responsibility for the CTK and any other tools will do a thorough inventory and complete a TAS produced hand receipt or AF IMT 1297. A SNCO or sortie generation cell chief will verify turnover inventory is accomplished and will provide his/her minimum signature and employee number on the hand receipt.

13.5.2.1.4.1.2. (Added) The hand receipt will be return to the tool section.

13.5.2.1.4.1.3. (Added) The tool section will verify that both individuals hand receipts identify the same tools and, if the items were signed out the hand receipt identifies all tools signed out by the releasing indi-

vidual. Once verification has been made the CTK monitor will reassign the tools to the receiving individual in TAS. After the releasing individual's tool quantity has been verified, he/she is relieved of responsibility for the tools.

13.5.2.1.4.1.4. (Added) The receiving individual is then responsible for ensuring all tools and equipment are returned to the CTK storage area.

13.5.2.1.5. (Added) Procedures for control of crash recovery and hydrazine response equipment permanently assigned in vehicles are:

13.5.2.1.5.1. (Added) Daily use items assigned to mobile vehicles will be treated and marked as a CTK. They will be signed out in TAS and inventoried using a PACAF IMT 140. These items will be turned in and signed out on each shift, and inventoried after every job and aircraft.

13.5.2.1.5.2. (Added) Crash recovery equipment used infrequently and stored in crash trailers will be assigned as a CTK with inventory, and have a weekly inventory and inspection when not used. When used, the trailer will be signed out in TAS and a complete inspection and inventory of all assets will be made upon completion of crash recovery procedures. This inspection will be annotated on a PACAF IMT 140.

13.5.2.1.6. (Added) Inspection Criteria:

13.5.2.1.6.1. (Added) When CTKs are turned in, users/issuers will make sure:

13.5.2.1.6.1.1. (Added) All tools are present or accounted for by inventory and Part II of PACAF IMT 140 entries.

13.5.2.1.6.1.2. (Added) CTK container is free from F.O. or work order debris.

13.5.2.1.6.1.3. (Added) Damaged or broken tools are reported, replaced, and or annotated on PACAF IMT 140.

13.5.2.1.6.1.4. (Added) PACAF IMT 140 is filled out properly and signed.

13.5.2.1.6.1.5. (Added) Tools are clean and serviceable.

13.5.2.2. See Paragraph **13.2.1.2.**

13.5.2.2.1. (Added) Semiannual inspection will be documented on the CTK Inventory and Inspection Log (or automated product) or in letter format which will include the next inspection due date. At a minimum the following items will be inspected during the 180 day inspection.

13.5.2.2.1.1. (Added) Ensure serviceability of all tools (free of rust, excessive wear, damage, etc.).

13.5.2.2.1.2. (Added) Ensure CTKs overall serviceability and appearance (box, paint condition, foam inlay material condition, etc.) and free of F.O.

13.5.2.2.1.3. (Added) Ensure proper etching of all tools (WWID clearly etched and correct).

13.5.2.2.1.4. (Added) Ensure Master MIL matches the contents of the CTK, and both the master MIL and the MILs in the box folder and tool box match.

13.5.2.2.1.5. (Added) Ensure CTK Folder is filled out properly and contains PACAF IMT 140 parts I and II, and current MIL.

13.5.2.2.1.6. (Added) Ensure all PMEL items calibration is current and labels are properly documented. Labels must be legible; if the master PMEL listing (TAS or paper copy) and the PMEL calibration label are in conflict, then the label on the item will be the guide for the calibration requirements.

13.5.2.2.1.7. (Added) Completing and maintaining a more frequent inspection program is authorized (i.e., 30-day and 90-day inspections). 180-day must be annotated and recorded as such an inspection. Any inspection program initiated by individual sections will be held accountable for their local inspection program.

13.6.1. (Added) The Fabricating Activity will:

13.6.1.1. (Added) Provide the requester with a local manufacture processing kit.

13.6.1.2. (Added) Assist the requester in determining specifications and quantities of required materials, part/stock numbers, and estimated cost, if known. Only the fabricating activity can determine the feasibility of the local manufacture.

13.6.1.3. (Added) Notify the Flight Service Center Local Manufacture Monitor (FSCLMM) when the local manufacture is complete, and ready for pick up by the requester.

13.6.1.4. (Added) Release parts to the requester using a FSCLMM processed DD Form 1348-1, **DoD Single Line Item Release/Receipt Document**, (Due-out release).

13.6.2. (Added) The FSCLMM will:

13.6.2.1. (Added) Load a local stock number for the requested local manufacture item and will establish a document number for the job.

13.6.2.2. (Added) Maintain a list of all approved local manufacture requests, coordinating the status (AWM, AWP, and INW) with the fabricating activity at least monthly.

13.6.2.3. (Added) Process the supply document, and obtains a due out release for the completed local manufactured item(s), once notified by the fabricating activity of the completed order.

13.6.3. (Added) The MXG/QA representative will:

13.6.3.1. (Added) Analyze the feasibility of local manufacture tools not outlined in technical data.

13.6.3.2. (Added) Verify that use of the item manufactured will not pose a safety hazard to personnel or damage equipment.

13.6.4. (Added) The MXG/CC has final approval for local manufacture requests.

13.8.1.11. (Added) Lost Tool Procedures: Ensure PACAF IMT 140a is initiated and obtain a lost tool investigation control number from QA. QA will assign a control number and inform MOC of the number. Assigned numbers for each lost tool will be as follows: Year-QA-LT-the sequential number issued by 51 MXG/QA. Example: 05-QA-LT-001.

13.8.1.11.1. (Added) The AMU/Flight OIC or designated representative will appoint a senior investigating official to direct the search for the lost item and ensure proper completion of the PACAF IMT 140a. The senior-investigating official must be a SNCO or officer and be familiar with AFI 21-101/PACAF Sup 1 requirements.

13.8.1.11.2. (Added) The MOC will:

13.8.1.11.2.1. (Added) Notify Command Post if an aircraft involved has left its parking area, relaying all information gathered on the emergency action checklist for recalling aircraft for lost/missing tools.

13.8.1.11.2.2. (Added) Notify 51 MXG/QA, as appropriate, and the Wing FOD NCO (51 FW/CVFOD).

13.8.1.11.2.3. (Added) Ensure appropriate MOO/SUPT or designated representative (for aircraft/equipment involved) has been notified. (Verify with EAC and MOC checklist)

13.8.1.11.3. (Added) The Senior Investigating Official will:

13.8.1.11.3.1. (Added) Ensure a thorough search has been conducted before terminating the investigation.

13.8.1.11.3.2. (Added) Sign the investigation-terminated block on PACAF IMT 140a when search is completed.

13.8.1.11.3.3. (Added) Ensure a copy of the completed PACAF IMT 140a is sent to 51 MXG/QA.

13.8.1.11.3.4. (Added) Ensure a copy of PACAF IMT 140a for unrecovered tools, is filed in the aircraft jacket file. If found, notify squadron P&S to remove PACAF IMT 140a from aircraft jacket file.

13.8.1.11.3.5. (Added) The PACAF IMT 140a is deemed complete when the appropriate MOO/SUPT or designated representative, signs the appropriate block.

13.8.1.11.3.6. (Added) Notify the Wing FOD NCO (51 FW/CVFOD) and the appropriate lost tool monitor in 51 MXG/QA when a reported or suspected lost tool is found even if the report has been closed.

13.8.1.11.3.7. (Added) Report any broken or unserviceable tools to the CTK monitor when turning in the tool kit. All broken tools must be turned in. Broken tools not turned in will be treated as a missing tool.

13.9. (Added) All hazardous materials storage lockers will require a weekly inspection for cleanliness, serviceability, shelf life, and general safety.

13.10. (Added) Aircrew tools are defined as tools used during maintenance of aircrew equipment. All life support section CTKs will be marked with 9 digit WWID and tracked using TAS.

15.2.1.2. MOF PS&D will provide written responses addressing deficiency resolution through their commanders to all addressees.

15.2.3.1.1. (Added) Every Monday, Wednesday, and Friday morning the following files will be copied from “Q: 51 MXG/51 MOS/MXOO/MXOOP/CAMS_ Products” to a computer in each AMU scheduling section:

15.2.3.1.1.1. (Added) Planning Requirements for Special Inspection/Time Change (PRA)

15.2.3.1.1.2. (Added) TCTO Status Listing (TSS)

15.2.3.1.1.3. (Added) Time Distribution Inquiry (TDI)

15.2.3.1.1.4. (Added) TCTO Index Listing (TIL)

15.2.3.1.2. (Added) These products will be updated electronically after Special Inspections, Time Changes or TCTO’s are processed in CAMS or printed and updated in red ink.

15.2.3.1.3. (Added) The AMU PS&D will back up these files on electronic media to be kept in the event of a communication failure with the MIS (CAMS) so that the maintenance scheduling process can continue.

15.2.3.1.4. (Added) Daily CAMS TRIC QVR (#128) will be run to see what scheduled maintenance was completed the previous shift. Once all suspense's are processed the manual back up files will be updated showing the new due date.

15.2.3.1.5. (Added) Updates will be annotated in red whether kept electronically or in printed format. A text file or a printed copy of the screen will be kept until it is verified that the MSAT Tables have been updated. At that point either new copies of the products can be downloaded or the Monday morning products have to be manually updated. Once updated files have been saved previous versions can be destroyed.

15.2.3.2.1. (Added) Automated and manual AFTO IMT 95 documentation requirements will be done IAW with this chapter and T.O 00-20-1, *Aerospace Equipment Maintenance General Policy and Procedures.*

15.2.3.3. Aircraft Jacket Files will be reviewed quarterly using the standardized checklist). Use standardized quarterly jacket file review checklist located at **Attachment 4**. Jacket files will contain the minimum historical documents identified in TO 1F-16CG-6-11, TO 1A-10-6 and TO 00-20-1.

15.2.3.3.1. (Added) Each aircraft jacket file will be standardized as in **Attachment 4**.

15.2.3.3.2. (Added) Any item that is decentralized will have a valid and current DD Form 2861 filed in the jacket file.

15.2.3.3.3. (Added) Use standardized missing Form's letter located at **Attachment 5**.

15.2.3.3.4. (Added) Inspection requirements for all decentralized scheduling activities will be conducted semiannually IAW this chapter.

15.2.3.4. An Aircraft Document Review (ADR) will be completed every 14 days at deployed locations and home station. ADR will be conducted prior to/upon completion of phase, after completion of major maintenance (e.g. Program Depot Maintenance), prior to aircraft deploying TDY and during transfer/acceptance inspection. Transfer aircraft will receive an ADR within 3 days of the transfer dock input date and on the completion date. Conflicts with modular engine flying hours and manual cycles are verified with Engine Management Section during the document review.

15.2.3.4.1. AMU PS&D will:

15.2.3.4.1.1. (Added) Provide the following MIS products to the flight chief as a complete package: 380/Documented Maintenance List (Option 6 with Supply data), 525/TCTO Data Code Inquiry (Option 4), 700/Operating Time Print, 726/Shop Equipment Operational Inquiry (Options U & H) for prior 14 day time period, 701/Insp./TCI/TCTO Forecast (Options D & H), 713/On-line Engine Inquiry (Option 1) and screen 990 (F-16's only)

15.2.3.4.1.2. (Added) Ensure use of the standardized Document Review Cover/sign off sheet (See **Attachment 7**) - At a minimum, these individuals will review the squadron coordination sheet: DCC/Assistant, P&S, MSL, and AMU OIC/NCOIC

15.2.3.4.1.3. (Added) Schedule a delayed discrepancy for verification of out-of-configuration items that cannot be immediately rectified.

15.2.3.4.1.4. (Added) Review the AFTO IMT 781F, **Aerospace Vehicle Flight Report and Maintenance Document**/AFTO IMT 781A/AFTO IMT 781J, **Aircraft and Engine Operating Time, Cycle and Oil Added (Half Pints, Pints, Quarts)**/AFTO IMT 781K, **Aerospace Vhicle Inspection, Engine**

Data, Calendar Inspection and Delayed Discrepancy Document /local forms and the on-line print outs (or ARC) to ensure accuracy and all entries match CAMS. Validate deferred discrepancies listed in the aircraft AFTO IMTs 781A/K against those write ups in CAMS and on the ARC.

15.2.3.4.1.5. (Added) Contact OAP lab and engine management sections via telephone to ensure aircraft and installed engine times in CAMS/aircraft forms match the engine records and OAP records.

15.2.3.4.1.6. (Added) Verify aircraft special inspections (SI) TCTO, and time change items

(TCI) due dates are accurate. Ensure any due or overdue SI's, TCTO's; TCI's are transferred to the AFTO IMT 781A's for immediate attention and compliance.

15.2.3.4.1.7. (Added) Ensure all applicable TCTO's are entered into the current AFTO IMT 781K showing proper status codes

15.2.3.4.1.8. (Added) Ensure the routing sheet has been completed. For F-16 component errors, review CAMS GCSAS screen # 690 and ensure corrections are made as required

15.2.3.4.1.9. (Added) File the most current completed ADR package in the applicable aircraft jacket file

15.2.3.4.1.10. (Added) Ensure delayed discrepancies requiring depot level assistance have a JCN established against the Depot level work center. Ensure the discrepancy is validated by QA.

15.2.3.7.1. (Added) SI, TCI, TCTO Procedures: The following outlines procedures and requirements for Cartridge/Propellant Actuated Device (CAD/PAD), survival kit and parachute and standard TCI management on Block 40 F-16C/D and A/OA-10 aircraft. Refer to CAMS TRIC Code RII (screen # 904) menu to inquire for a list of Generic Configuration Status and Accounting System (GCSAS) approved part numbers for Block 40 F-16C/D aircraft. The Owning Work Center (OWC) supervisor will ensure the accuracy and timely update of their portion of the CAMS TCI database and notify OSS PS&D via E-mail, voice or FAX of current TCI status (i.e., updated in CAMS with new PSN information.)

15.2.3.7.2. (Added) MOF PS&D will:

15.2.3.7.2.1. (Added) Coordinate with HQ PACAF/LGMF and database management on updates and corrections to the F-16C/D RII table for approved part numbers.

15.2.3.7.2.2. (Added) Provide CAMS training for PS&D related CAMS work centers events when needed.

15.2.3.7.2.3. (Added) Review and inform AMU PS&D weekly of overdue TCI's and SI's MSAT error listing products

15.2.3.7.2.4. (Added) All affected work centers will use MSAT use as working tools to ensure data accuracy.

15.2.3.7.2.5. (Added) Ensure compliance with TCI forecast requirements IAW TO 00-20-9, TO 00-20-9-1, and AFI 21-101/PACAF Sup 1.

15.2.3.7.2.6. (Added) Establish Job Standard Events for TCI's IAW applicable -6 and commodity TOs.

15.2.3.7.2.7. (Added) Review CAMS GCSAS screen # 690 daily for F-16 component errors and ensure corrections as needed.

15.2.3.7.2.8. (Added) Assist AMU PS&D when parts have due-in dates past aircraft and equipment ground dates.

15.2.3.7.3. (Added) AMU PS&D Will:

15.2.3.7.3.1. (Added) Act as the monitoring and coordinating agency for squadron assigned aircraft TCI, SI, TCTO.

15.2.3.7.3.2. (Added) Provide TCI forecast requirements to MOF PS&D IAW applicable 00-20 series TO's.

15.2.3.7.3.3. (Added) Refine quarterly forecast monthly to include all TCI's NLT 45 days prior to the affected month.

15.2.3.7.3.4. (Added) Forecast time change components IAW TO 00-20-9 and 00-20-9-1, scheduling and deferring work center events for parts when required.

15.2.3.7.3.5. (Added) Weekly review MSAT products ensuring data accuracy and make corrections as needed.

15.2.3.7.3.6. (Added) Review all PSN installation data using CAMS screen 128 daily and validate suspense's.

15.2.3.7.3.7. (Added) Review CAMS GCSAS screen 690 daily for F-16 aircraft component errors and contact MOF PS&D for proper solutions.

15.2.3.7.3.8. (Added) Inform the OWC of missing or incorrectly loaded PSNs for correction

15.2.3.7.3.9. (Added) Verify accuracy of installed TCI's during phase, acceptance, and other major inspections through use of automated products.

15.2.3.7.3.10. (Added) Perform initial PSN item loads and installations on newly assigned aircraft or when components are changed at depot, except egress TCIs.

15.2.3.7.3.11. (Added) Prepare out-of-cycle request letters for munitions supply if required.

15.2.3.7.3.12. (Added) Provide a letter to MOF PS&D for emergency issue requests. Due date extension requests to the applicable item manager should be submitted at least 30 days prior to aircraft grounding for non-availability of parts. All letters will be coordinated through the OWC supervisor prior to action being taken to ensure accuracy.

15.2.3.7.4. (Added) AMU APG/Specialist will:

15.2.3.7.4.1. (Added) Ensure CAMS is updated for standard TCIs when such items are changed during scheduled/unscheduled maintenance.

15.2.3.7.4.2. (Added) Forward installed component(s) new AFTO IMT 95, if received, to AMU PS&D. Ensure removed component(s) old AFTO IMT 95, Significant Historical Data, is turned in with the part to the affected supply agency.

15.2.3.7.5. (Added) FS Life Support will:

15.2.3.7.5.1. (Added) Maintain CAMS data accuracy for survival kits and components, kit and chute installed locations, and correct any detected errors.

15.2.3.7.5.2. (Added) Maintain an AFTO IMT 338, **Survival Kit Record**, for each survival kit with PSN, lot number, DOM, DOI, inspection and time change due dates, and current installed location.

15.2.3.7.5.3. (Added) Provide time change forecast information for all locking cord cutters (including spares) to MOF/AMU PS&D IAW TO 00-20-9-1.

15.2.3.7.5.4. (Added) Load, install and establish time change and/or inspection intervals for each survival kit component installed or replaced using appropriate CAMS screens, and correct errors when needed.

15.2.3.7.5.5. (Added) Verify parachute and survival kit PSNs when removing and reinstalling these components to F.O.M., and correct CAMS information when errors are detected.

15.2.3.7.5.6. (Added) Review CAMS GCSAS screen 690 daily for F-16 aircraft component errors generated by shop remote IDs, and contact AMU PS&D for correct solutions. Provide AMU PS&D new PSN TCI information as suspense validations are performed.

15.2.3.7.6. (Added) Egress Shop will:

15.2.3.7.6.1. (Added) Initiate and maintain current inventory of all egress TCI's by aircraft, canopy and seat, to include noun, PSN, lot number, DOM, DOI, due dates, and position.

15.2.3.7.6.2. (Added) Monitor and correct errors as needed.

15.2.3.7.6.3. (Added) Perform a hands-on inventory of all CAD/PAD items every 36 months as well as during aircraft acceptance inspection (in conjunction with seat and canopy 36-month inspection).

15.2.3.7.6.4. (Added) Load, install and establish time change or inspection interval for each replacement PSN item, using the JST number (DOM, DOI) that comes due first.

15.2.3.7.6.5. (Added) Review CAMS screen 690 daily for GCSAS errors on F-16 aircraft components created from shop remote IDs, and contact AMU PS&D for correct resolutions.

15.2.3.7.6.6. (Added) Coordinate with AMU PS&D for any removal and replacement actions of time change items that were damaged or found defective.

15.2.3.7.6.7. (Added) Provide CAD/PAD verification sheet(s) to AMU PS&D for updates to egress configuration TCI data.

15.2.3.7.7. (Added) Survival Shop will:

15.2.3.7.7.1. (Added) Maintain AFTO IMT 392, Parachute Repack Inspection and Component Record, or equivalent on each parachute with PSN, lot number, DOM, DOI, due date, and installed position.

15.2.3.7.7.2. (Added) Load, install, and establish time change and/or inspection intervals for each parachute component installed or replaced using appropriate CAMS screens.

15.2.3.7.7.3. (Added) Perform hands-on inventory of all parachute components when they are taken to the shop for maintenance, and correct errors detected in CAMS.

15.2.3.7.7.4. (Added) Verify PSN data on each drogue chute prior to repack and correct CAMS errors as needed.

15.2.3.7.7.5. (Added) Provide time change forecast information for all parachute components (including spares) to MOF PS&D IAW TO 00-20-9 and TO 00-20-9-1.

15.2.3.7.8. (Added) JML's for Off-Equipment Items Procedures: MXS back shop owning work center will maintain JML for their assigned equipment

15.2.3.7.9. (Added) MXS Back shops will:

15.2.3.7.9.1. (Added) Maintain all required inspection, TCIs and job flow packages (JFP) IAW applicable technical directives (i.e., engine removal/installation packages, wheel and brake removal/replacement packages).

15.2.3.7.9.2. (Added) Load and establish new equipment items into CAMS within 5 duty days of receipt.

15.2.3.7.9.3. (Added) Contact QA and applicable P&S section for updates to CAMS JFP or job standard (JST).

15.2.3.7.9.4. (Added) Maintain a current copy of JML on file for ready use.

15.2.3.7.9.5. (Added) Ensure JCN is scheduled in CAMS using established job standards for assigned equipment.

15.2.3.7.10. (Added) MOF PS&D will:

15.2.3.7.10.1. (Added) Support all MXS back shops where a 2R1X1 maintenance scheduler is not assigned.

15.2.3.7.10.2. (Added) Load, change, and delete JFP and JST's for required back shop maintenance actions as changes occur.

15.2.3.8.1. (Added) TCTO's will be maintained in six-part folders setup as follows:

Section 1 – Basic TCTO, Supplements & Messages

Section 2 – AF IMT 2410, **Inspection/TCTO Planning Checklist**

Section 3 – AF IMT 2001 (If Required)

Section 4 – CAMS 663, 525 &/or CEMS Products

Section 5 – E-Mail Correspondence

Section 6 – Extra Copies of TCTO and Supplements

TCTO Number	Data Code
TCTO Narrative…	
Ground Date:	Rescission Date:

15.2.3.9.1. (Added) Procedures for Freezing and Consolidating Aircraft and Equipment Records in the Event of an Accident: In the event of a Class A flight mishap involving aircraft assigned to the 51st Fighter Wing, Command Post will contact CAMS database manager, 51 MOS/MXOOA, and request applicable aircraft history stored in the database.

15.2.3.9.2. (Added) Immediately after Command Post notification, the CAMS database manager will place the system in file update mode (FUD), and a save of the database will be performed. After the save, all initial products will be run in triplicate copies and provided to MXG/QA.

15.2.3.9.3. (Added) For all other mishap classifications, products will be run in triplicate copies and provided to the local safety office or mishap board.

15.2.3.9.4. (Added) After products have been generated, MOF PS&D will change the CAMS possession purpose identifier code of the mishap aircraft to signify current status of the aircraft. CAMS will be brought out of FUD mode and returned to normal processing.

15.2.3.9.5. (Added) MXG/QA will ensure that AMU PS&D is notified of the event and all agencies that maintain records for effected aircraft are notified to freeze those records.

15.2.3.9.6. (Added) AMU PS&D will gather all aircraft records for MXG/QA. MXG/QA will deliver all records to local safety office/mishap board.

15.2.3.10. Aircraft transfer/equipment transfer inspections:

15.2.3.10.1. (Added) MOF P&S will:

15.2.3.10.1.1. (Added) When receiving a new aircraft, MOF P&S will coordinate the arrival of the aircraft with the AMU maintenance activities, life support and Egress so that the equipment can be inventoried.

15.2.3.10.1.2. (Added) Send messages for any shortages in the equipment inventory.

15.2.3.10.1.3. (Added) Perform appropriate AVDO duties IAW AFI 21-103.

15.2.3.10.2. (Added) The AMU PS&D will:

15.2.3.10.2.1. (Added) Coordinate with the -21 Equipment monitor to initiate the AF IMT 2692, **Aircraft/Missile Equipment Transfer/Shipping Listing**.

15.2.3.10.2.2. (Added) Initiate AFTO IMT 290, **Aerospace Vehicle Delivery Receipt**. Pilot should sign to take possession of the aircraft records. In turn the receiving organization should sign and the Pilot should return a copy to the PS&D section upon return to home station.

15.2.3.10.2.3. (Added) Utilize AFTO IMT 345, **Aerospace Vehicle Transfer Inspection Checklist and Certification**. Complete this form and File in the aircraft historical records prior to transfer.

15.2.3.10.2.4. (Added) Utilize appropriate CAMS JST's to create JCN's in CAMS for transfer and acceptance of aircraft.

15.2.3.10.2.5. (Added) Ensure aircraft acceptance inspections include a validation of completed depot and contractor maintenance requirements including accomplished, and scheduled but not accomplished TCTOs. Use the completed AFTO IMT 103, **Aircraft/Missile Condition Data**, and applicable work specifications, as applicable, as a guide to verify work accomplished.

15.3.6.5. (Added) Pre-dock Inspection Meeting Procedures:

15.3.6.5.1. (Added) The MOO/SUPT will ensure that the following persons at a minimum are in attendance at pre-dock inspection meetings: phase section dock chief, AMU/MXS production superintendent, flight chief, crew chief, MSL and AMU PS&D scheduler.

15.3.6.5.2. (Added) AMU PS&D will:

15.3.6.5.2.1. (Added) Prior to the meeting, incorporate all requirements against the aircraft into a work package. Schedule all known requirements using CAMS screen 86 (ZSC) and transcribe the Job Control Numbers (JCNs) to AF IMT 2410. Annotate deferred discrepancies to be repaired during the inspections using their original JCN. Using the AF IMT 2410 as an aid in planning for and conducting the pre-inspection meeting, list the pre-inspection meeting attendees in block 14 and any significant discussion items presented in the meeting (i.e., corrosion found on floor board panels that require removal for strip and paint, as well as any preparation and towing). In block 15 show additional specialist support tasks. Inputs from OSS PS&D and engine management scheduling sections will be made on an as required basis.

15.3.6.5.2.2. (Added) Inform representatives of the inspection schedule, input/output dates, type or number of phase inspection due, to include TCTOs, TCIs, special inspections, deferred discrepancies and any special instructions to be accomplished.

15.3.6.5.2.3. (Added) (F-16C/D aircraft only) Provide the dock chief with a verification of actual/approved aircraft configuration listing, identifying those items out of configuration, using CAMS screen 990 (ICT). Items identified as out of configuration during the pre-inspection meeting must be visually checked and verified during the phase inspection. A serially tracked component inventory sheet may be used for documentation purposes by the inspection activity.

15.3.6.5.2.4. (Added) (A/OA-10A aircraft only) Provide the dock chief with a PSN verification sheet and include any missing or questionable TCI's requiring verification.

15.3.6.5.2.5. (Added) Provide a complete signed copy of AF IMT 2410 to the dock chief and maintain a duplicate suspense copy, to be used as an aid in conducting the post-dock meeting.

15.3.7. Post-dock Meeting Procedures:

15.3.7.1. (Added) Agencies attending meeting should be the same as those attending the pre-dock meeting.

15.3.7.2. (Added) The dock chief will:

15.3.7.2.1. (Added) Verify completion of all inspection requirements and transcribe/defer all open discrepancies to the appropriate AFTO IMT 781 and CAMS. Change delivery destination for all parts ordered and not received during the inspection.

15.3.7.2.2. (Added) Complete automated/basic inspection events in CAMS, ensuring all work center events (WCE's) pertaining to the inspection are completed and present a completed CAMS 380/122 print out for the phase to AMU PS&D for filing.

15.3.7.2.3. (Added) (F-16 C/D) Provide verified configuration data at the post-dock meeting.

15.3.7.2.4. (Added) Ensure the production superintendent is informed of all incomplete/deferred open discrepancies and formulates a plan to resolve these discrepancies with the phase dock chief and other affected agencies. Ensure all attendees sign the AFTO IMT 2410 signifying phase completion, with any pertinent remarks as to non-completion of any work cards.

15.5.1. (Added) In according with AFI 21-101 and AF1 l1-401/PACAFSUP1, *Aviation Management*, Maintenance Operations Flight (MOF) Plans, Scheduling & Documentation (PS&D) and the Operations Support Squadron (OSS) Aerospace Vehicle Utilization Monitor (A.VUM) are required to publish procedures for ensuring daily reconciliation and reporting of the daily, monthly, and annual flying hour program. This policy letter will establish these required procedures.

15.5.2. (Added) The OSS AVUM will be point of contact for reporting the 51 FW annual flying hour program to HQ PACAF/DOT. The source document for aircraft flying hours is the AFTO IMT 781, MOS FS&D provides the Aircraft Utilization Report (AUR) using the Core Automated Maintenance System (CAMS). Aircraft Maintenance Unit (AMU) debriefing and Flying Squadron Aviation Resource Managers (SARMs) are jointly responsible for the accuracy of utilization data as recorded on the AFTO IMT 781 and input into CAMS.

15.5.3. (Added) MOF PS&D will:

15.5.3.1. (Added) Coordinate daily with CAMS database management to produce the AUR.

15.5.3.2. (Added) Transmit the AUR, via email, to OSS/OSC, the SARMs and debrief agencies NLT 0930. This will allow the SARMs and debrief personnel to validate the previous day's utilization data entered into CAMS and the AFTO IMT 781s.

15.5.3.3. (Added) Provide assistance as required to AMU debrief for corrections required in CAMS.

15.5.3.4. (Added) Coordinate monthly with CAMS database management to run an AUR NLT the third calendar day of the month for transmittal to the AMU debriefing and SARMs for verification and validation.

15.5.3.5. (Added) After verification of flying hours and sorties by SARMs and AMU debrief personnel, compile the data and email to OSS/OSC AVUM.

15.5.3.6. (Added) Input 55 ALF AFTO IMT 781s into CAMS.

15.5.3.7. (Added) Monitor and verify daily and monthly 55 ALF data with 55 ALF SARM.

15.5.4. (Added) Flying Squadron Operations Officer will ensure aircrew members fax completed AFTO IMT 781 to AMU debriefing office upon delivery of an aircraft to a depot facility or during off-station/cross-country sorties if aircrew will not be able to return prior to the end-of-month/end-of-year closeout. If a fax machine is not available, call or e-mail the information in as soon as possible.

15.5.5. (Added) SARM's will:

15.5.5.1. (Added) Verify all information on AFTO IMT 781s received, from debriefing is correct and input data into the Aviation Resource Management System (ARMS). The original AFTO IMT 781 will be maintained IAW RDS table 13-10 rule 02.00.

15.5.5.2. (Added) 55 ALF SARMs will fax all AFTO IMT 781's to MOP PS&D for debriefing into CAMS and coordinate with MOF PS&D to correct all discrepancies.

15.5.5.3. (Added) Verify daily the previous day's total hours and sorties flown. Using the AFTO IMT 781 as the source document, sign and date the CAMS AUR annotating all discrepancies on The AUR

15.5.5.4. (Added) Monthly, using the AFTO IMT 781 as the source document, verify the previous month's total hours and sorties flown listed on the monthly AUR. Coordinate with AMU debriefing to correct all flying hour discrepancies NLT the fourth calendar day of each month. SARMs and AMU debrief sign the report and fax it to MOP PS&D NLT the end of the duty day.

15.5.6. (Added) 25 and 36 AMU debriefing will:

15.5.6.1. (Added) Verify accuracy of utilization data on AFTO IMT 781s received from aircrew and initial Block 33.

15.5.6.2. (Added) Input flying hour data into CAMS IAW AFCSM 21-565, Vol 2. Forward the initialed AFTO IMT 78ls to SARMs after utilization data is input into CAMS. If CAMS is down for an extended period, make a duplicate copy of the AFTO IMT 781 and forward the original to the flying squadron. Identify and destroy duplicate AFTO IMT 781 after entry into CAMS.

15.5.6.3. (Added) Receive the AUR from MOF PS&D daily and reconcile with SARMs to verify total hours and sorties flown for the previous day and total hours and sorties flown for the month with ARMs. Make any necessary corrections to CAMS from AUR. Annotate corrections made in CAMS, sign the AUR, and fax to MOF PS&D NLT end of that duty day.

15.5.6.4. (Added) Review monthly AIJR data. Correct flying hours and sorties for the previous month NLT the fourth calendar day of each month. Fax the signed AUR to MOF PS&D NLT the end of that duty day.

15.5.7. (Added) OSS/OSC section will:

15.5.7.1. (Added) Monitor the wing's annual Flying Hour Program (FHP) via the AUR and delta sheets and recommend adjustments when goals are greatly exceeded or unrealistic.

15.5.7.2. (Added) Keep commanders informed of the wing FHP status via slides at the Tuesday and Thursday scheduling meetings.

15.5.7.3. (Added) Coordinate daily with flying squadrons and AMU debriefing personnel to validate FHP information.

15.5.7.4. (Added) Update the wing sortie status board and remove all data during exercises.

15.5.7.5. (Added) On the fifth calendar day of each month acquire an AUR "B" and "C" report from MOS PS&D.

15.5.7.6. (Added) After verification of flying hours and sorties by SARMs and AMU debrief personnel, compile the data and email to all using on-base agencies and HQ PACAF/DOT IAW via e-mail IAW AFI 11-401/PACAF Sup 1. This copy will be maintained on file for 1 year IAW Air Force Records Information Management System (AFRIMS).

15.5.7.7. (Added) Coordinate changes to the 51 FW FHP and transmit changes to HQ PACAF/DOT.

15.5.7.8. (Added) Maintain a current delta sheet indicating all changes to sorties/hours contracted, scheduled and flown.

15.11.3. Be the POC for the depot field team arrival and departure information. Once the team arrives on base, PS&D will initiate an arrival message addressed to the MAJCOM receiving assistance and the SM/IM ALC. They will also be responsible for initiating a team departure message to the same organizations (Ref 00-25-107, *Maintenance Assistance*).

15.11.3.1. (Added) Change the aircraft possession code to appropriate code utilizing the date time that the message was transmitted and return aircraft to the appropriate code after completion of repairs. Update aircraft status with the MOC, MXG/CC/CD, and the squadron's maintenance supervision of the affected unit.

15.12.2.2.2. MOF PS&D will periodically review MIS products to ensure proper documentation and management by owning and managing TCTO agencies. When errors are detected, MOF PS&D will advise affected scheduling functions and provide assistance when necessary to correct the discrepancies. MOF PS&D will coordinate with MDSA to ensure MIS TCTO and Aircraft Configuration synchronization programs are run monthly.

15.12.2.2.2.1. (Added) MOF PS&D will chair a monthly TCTO review meeting attended by all TCTO owning and managing agencies. The chair will discuss the supply reconciliation, supply status, scheduling factors, current TCTO status and anticipated problems for all active TCTO's. MOF PS&D will provide minutes from the meeting and distribute to all affected agencies.

15.12.2.2.2.2. (Added) MOF PS&D will ensure all TCTO's requiring kits/parts, except parts required by inspection type TCTO's', are ordered on an AF IMT 2001 and submitted to the Flight Service Center for requisitioning IAW PACAFI 23-203, AFMAN 23-110 and applicable supplements.

15.12.2.2.2.3. (Added) Scheduling, tracking and day-to-day monitoring of TCTO's is accomplished by the owning scheduling agency (MOF PS&D, MOF EM, AMU PS&D, Armament, and AGE).

15.15.1.2.1. (Added) Notify the AMU maintenance activities and squadron life support of the date the aircraft will be transferred and when the transfer documents are required to be ready. When receiving a new aircraft MOF P&S will coordinate the arrival of the aircraft with the AMU maintenance activities, Life Support and Egress so that the equipment can be inventoried.

15.15.2.1. Send messages for any shortages in the equipment inventory.

15.15.2.2. Perform appropriate AVDO duties IAW AFI 21-103.

15.15.4. (Added) Acceptance Inspection General Procedures: The receiving organization will perform an acceptance inspection on all newly assigned aircraft prior to placement into service. This will include inspecting all aircraft and engines received from depot maintenance, either organic or contract, prior to being placed in service. These inspections will be of sufficient depth to determine the ability of the item to perform its designed function. If the inspection has not been accomplished within 90 days of arrival at home station, the equipment must be removed from service. General requirements are as follows IAW TOs 00-20-1 and TO 2-1-18, applicable –6, and applicable –21.

15.15.4.1. (Added) Quality Assurance will:

15.15.4.1.1. (Added) Review and update weight and balance requirements.

15.15.4.1.2. (Added) Perform inspection on all areas required for Chart A completion.

15.15.4.1.3. (Added) Appoint a QA acceptance inspection POC to collect all noteworthy discrepancies from appropriate work centers and AMU PS&D sections for a particular aircraft or equipment item and submit an Acceptance Inspection report. The DREAMS system will be used when available. To ensure accurate and appropriate feedback is sent to the losing organization, QA will coordinate with maintenance supervision and receive MXG/CC approval before transmission of the Acceptance Inspection report. QA will file copies of all Acceptance Inspection reports.

15.15.4.1.4. (Added) MOS Plans and Scheduling will ensure all PDM returns, and newly assigned aircraft, are scheduled for Chart A inventories and acceptance inspections prior to the aircraft being placed on the local flying schedule.

15.15.4.2. (Added) 51 AMXS will:

15.15.4.2.1. (Added) Verify equipment status change with plans and scheduling and MOC.

15.15.4.2.2. (Added) Intercommand transferred equipment will carry a status of BT for a maximum of 5 duty days. (Ref. AFI 21-103, PACAF Sup)

15.15.4.2.3. (Added) Intracommand transferred equipment will carry a status of BT for a maximum of 10 duty days. (Ref. AFI 21-103, PACAF Sup)

15.15.4.2.4. (Added) Review historic documents and schedule aircraft for any required TCTO’s. Record this inspection on appropriate documents.

15.15.4.2.5. (Added) Perform basic postflight inspection IAW applicable -6.

15.15.4.2.6. (Added) Depanel and assist QA with a chart A inspection IAW local checklist.

15.15.4.2.7. (Added) Inventory and sign for applicable –21 equipment.

15.15.4.2.8. (Added) Appoint a squadron or AMU POC who will assist QA in compiling all notable minor and major discrepancies that pertain to the acceptance inspection aircraft or equipment.

15.16. (Added) Osan AB sortie sequence numbers—**Attachment 8**.

16.1.35. (Added) The Wing Weapons Manager (WWM) will:

16.1.35.1. (Added) Be the focal point for the 51 FW weapons incentive program.

16.1.35.2. (Added) Be the final authority for determining the eligibility of personnel.

16.1.35.3. (Added) Monitor competition progress and resolve discrepancies or conflicts.

16.1.35.4. (Added) WWM or designated representative will conduct AFI 36-2903, *Dress and Personal Appearance of Air Force Personnel*, Inspection.

16.1.35.5. (Added) Review results and forward winners' names to the commander for inclusion in the quarterly awards presentations.

16.2.2.22. (Added) Weapons Technician of the Quarter:

16.2.2.23. (Added) Compile AF IMT 1206's, **Nomination for Award**, and provide score sheet for board members.

16.2.2.24. (Added) (Weapons Load Crew of the Quarter)

16.2.2.25. (Added) WS will forward a schedule of events to each AMU approximately 1 week prior to the competition. Quarterly competitions will be held the third Friday of the first month after the quarter (i.e., 1st quarter Jan-Mar, competition will be the third Friday of April). All other Weapons Load Competition specific procedures are to be outlined by the WWMs Weapons Recognition Policy Letter.

16.2.2.26. (Added) Designate the munitions configuration to be loaded for each competition and establish time standards for the load. (NOTE: Load will not be released until the day of the competition)

16.2.2.27. (Added) Screen load crew records to ensure crew integrity has been maintained to the fullest extent possible.

16.2.2.28. (Added) Control and administer the load crew written examinations.

16.2.2.29. (Added) Document results of AFI 36-2903 Inspection.

16.2.2.30. (Added) Complete score sheets for each load crew.

16.2.2.31. (Added) Compile the total score of each load crew, determine the winner, and submit to WWM.

16.2.2.32. (Added) The 51 MXG commander will announce the winners and make presentations at the quarterly awards presentations, normally held in Weapons Load Training Facility.

16.6.3. (Added) Specific Training Aircraft responsibilities.

16.6.3.1. (Added) 51 MXG Weapons Standardization (WS) will manage the A-10 weapons load crew ground training aircraft to meet weapons load crew training requirements. The MTF A-10 APG instructor will be the assigned dedicated crew chief. The electrical, communications, pneumatic, and hydraulic systems will be kept operational to meet training requirements as much as possible.

16.6.3.2. (Added) 51 MXG/MXGW Weapons Standardization will inform the MXG/CC/CD of the weapons load crew ground training aircraft status as needed

16.6.3.3. (Added) 51 AMXS will provide maintenance support for the aircraft to keep systems operational for weapons load crew training.

18.5.4.1.1. (Added) Production superintendents are the approving authority for all CANN actions, except on hangar queen aircraft (CANN actions involving hangar queen aircraft are not delegated below the MXG/CC/CD level).

18.5.4.1.2. (Added) Production superintendents will coordinate cannibalization actions between squadrons when mission requirements dictate. For engine-to-aircraft cannibalizations, the squadron production superintendent will coordinate with Propulsion Flight Chief IAW standard supply discipline.

18.5.5.1. (Added) Specific DCC/CANN Manager responsibilities

18.5.5.1.1. (Added) Daily:

18.5.5.1.1.1. (Added) Inspect the aircraft to ensure that all connectors/lines disconnected during component removal from the night prior are capped or covered. If items are not covered, inform the owning shops of the discrepancy.

18.5.5.1.1.2. (Added) Inspect the aircraft for leaks and area around the aircraft for foreign objects; clean up leaks and empty the drip pans as required. If leaks and/or foreign objects are found that were obviously left from maintenance, inform the owning shops.

18.5.5.1.1.3. (Added) Verify CAMS, AFTO IMT 781A, and Supply match each other. Provide feedback to owning shops of discrepancies noted.

18.5.5.1.1.4. (Added) As time permits, install any parts determined not to be “high CANN items.”

18.5.5.1.1.5. (Added) Whenever possible, correct delayed discrepancies and perform time changes, TCTOs and/or scheduled maintenance, as required. Exception: battery cap checks may be delayed until the aircraft is being rebuilt.

18.5.5.1.2. (Added) Weekly:

18.5.5.1.2.1. (Added) Perform a records check on the CANN aircraft on the first day of each week. The document file only needs to be reviewed on the first records check.

18.5.5.1.2.2. (Added) Inventory FOM/TNB bins to verify required parts and/or hardware are on hand. If discrepancies are noted, order any missing parts or hardware to reduce build-up time.

18.5.5.1.2.3. (Added) For any MICAP item that seems to have a long lead-time, look at alternate procedures for procurement or repair. Note: MICAP may be able to find alternate sources of supply, as well as names and phone numbers for item managers and owning depots.

18.5.5.1.3. (Added) CANN Rebuild:

18.5.5.1.3.1. (Added) Provide a CANN asset priority spreadsheet of all open write-ups daily to the Production Super and flightline expediters, to include; APG, weapons, and specialists upon notification of rebuild. This spreadsheet will be placed in CANN aircraft forms.

18.5.5.1.3.2. (Added) Inventory old CANN aircraft FOM/TNB and move parts to new CANN aircraft FOM/TNB as required (reconcile with supply).

18.5.5.2. (Added) Expediters will ensure personnel perform proper documentation for cannibalized parts (i.e., CAMS, AFTO IMT 781As, etc.).

18.5.5.3. (Added) Aircraft will not exceed 21 days in CANN status without coordination with MOO/SUPT.

18.5.11.1.1. (Added) CAMS will be the primary source of data used in CANN data compilations. The CANN Log will be used as manual back-up system for cannibalization actions accomplished during CAMS downtime will be entered into CAMS at a later date. The maintenance systems analysis section chief will develop procedures to verify CAMS cannibalization data prior to reporting.

18.6.3.2.1. (Added) In coordination with QA, determine the need for an FCF (if not otherwise required by the aircraft specific TO).

18.6.3.2.2. (Added) Ensure aircraft forms, pulled and active are reviewed by QA prior to flight.

18.6.3.2.3. (Added) QA will make daily visits to the aircraft in Cat II and Cat III status to oversee forms documentation and perform needed QVIs.

18.9.6. (Added) Intake and Engine Inspection:

18.9.6.1. (Added) Personnel will remove all items from their pockets and inspect their footwear prior to entering aircraft intakes. Bunny suits will only be worn for intake and exhaust inspections marked as such, and controlled. They will be free of openings, pockets, hardware (snaps, zippers, patched, etc.), and designed to fit snugly at the wrists and ankles. A/OA-10 intakes do not require the use of bunny suits.

18.9.6.1.1. (Added) When exercise condition codes make the wear of chemical suits mandatory, personnel not wearing a Bunny suit will:

18.9.6.1.1.1. (Added) Ensure the ankle ties are tightly drawn and tied.

18.9.6.1.1.2. (Added) Empty chemical suit pockets and remove all accessories.

18.9.6.1.1.3. (Added) Account for all chemical suit external hardware (snaps, buckles, etc.) before and after each entry into cockpits and engine intakes.

18.9.6.2. (Added) Transient Alert personnel will:

18.9.6.2.1. (Added) Inspect intakes of applicable aircraft as soon as possible after the aircraft is parked.

18.9.6.2.2. (Added) Accomplish an intake inspection prior to flight if the aircraft remains overnight.

18.9.6.2.3. (Added) If the intake inspection cannot be accomplished, an entry will be made on the aircraft AFTO IMT 781A stating, “No intake inspection completed prior to engine start.” Entry will require a red dash. If the aircraft forms are not available, the entry will be made on a blank AFTO IMT 781A and given to the pilot for placement in the aircraft forms. Transient Alert will also notify MOC who will log the incident.

18.9.6.2.4. (Added) Transient aircraft with ground crews are responsible for their own intake inspections.

18.10.2.1. (Added) The wing Avionics manager will act as the group ASIP project officer who will maintain a continuity folder containing as a minimum: group and squadron monitor letter of appointment, copies of ASIP correspondence and AMU ASIP monthly reports for the previous 12 months.

18.10.2.1.1. (Added) The group ASIP project officer will perform semi-annual inspections and monitor monthly reports to include CAMS documentation to ensure activities are being completed on schedule. Inspections will include review of continuity folders and related records.

18.10.3.1.1.1. (Added) The 25 and 36 AMUs are responsible for changing and submitting ASIP data, records, tapes, and/ or computer files as required.

18.10.3.1.2.1. (Added) The AMXS commander appoints a primary and alternate ASIP monitor for each AMU to oversee and manage activities relating to ASIP. The monitors should be at a minimum a five level in AFSC 2A3X1X (A-10) or AFSC 2A3X2 (F-16).

18.10.3.1.3.1. (Added) The AMU ASIP monitors will ensure required resources and equipment for maintaining ASIP systems are available at TDY locations.

18.10.3.1.3.1.1. (Added) 25 AMU ASIP monitor will ensure flight log data is recorded after every flight utilizing the AFTO IMT 278, **A-10 Flight Log**. If capability exists, debrief will enter the data into the A-10 data collection web site at **https://asip.tinker.af.mil/plsql/a10public/a10pri.a10_package.a10_check**. If not, enter the data into the web site upon return to home station.

18.10.3.1.3.1.2. (Added) 36 AMU ASIP monitor will ensure aircraft are downloaded at the scheduled time. If capability exists, transfer the data to the F-16 ASIP reports web site at **http://asip.tinker.af.mil/f16/**. If not, transfer the data to the web site upon return to home station.

18.10.3.1.4.1. (Added) The AMU ASIP monitors will train maintenance and debrief personnel to perform ASIP related tasks. Training will be documented in the individuals training records.

18.10.3.1.4.1.1. (Added) 25 AMU ASIP monitor will ensure training includes use of AFTO IMT 278 and procedures on use of the A-10 data collection web site.

18.10.3.1.4.1.2. (Added) 36 AMU ASIP monitor will ensure training includes procedures on use of the F-16 ASIP reports web site.

18.10.3.1.5. The group ASIP project officer and the AMU ASIP monitors will work with OC-ALC, Tinker AFB to reconcile any erroneous or missing data in order to maintain ASIP data integrity.

18.10.3.2. (Added) For 36 AMU aircraft, ensure NDI personnel perform ASIP control point inspections IAW 1F-16CG-6-11, Section II, Part E, during aircraft phase inspections, as required.

18.10.6.6.1. (Added) 25 AMU ASIP monitor will ensure debrief enters the flight log data recorded on the AFTO IMT 278 into the A-10 data collection web site for each sortie flown.

18.10.6.6.2. (Added) 25 AMU ASIP monitor will ensure debrief maintains a minimum 6 months worth of pulled AFTO IMT 278s.

18.10.6.7. (Added) AMU ASIP monitors will maintain a continuity folder containing as a minimum: group ASIP project officer and squadron monitor letter of appointment, copies of ASIP correspondence and AMU ASIP monthly reports for the previous 12 months.

18.10.6.8. (Added) AMU ASIP monitors will submit monthly reports to the group ASIP project officer and are responsible for ensuring adequate ASIP resources are available.

18.10.6.8.1. (Added) 25 AMU ASIP monthly report will contain: accelerometer status, accelerometer parts on order, FLDR equipped aircraft tail number, recorder serial number, tape installation date, tape removal date, tape submitted date and FLDR parts on order with document numbers to include due in dates.

18.10.6.8.2. (Added) 36 AMU ASIP monthly report will contain: aircraft serial number, last download/ submission date, CSMU serial number, SAU serial number, CSFDR system status and CSFDR parts on order with document numbers to include due in dates.

18.10.6.9. (Added) AMU ASIP monitor will review and inspect ASIP program status semi-annually. Inspections will include review of continuity folders and ASIP related records.

18.11.3.1. (Added) Flexible Bore Scope Inspection Training and Certification Program: Only qualified personnel will be allowed to sign out borescope equipment.

18.11.3.2. (Added) Training will be accomplished in three phases. Phase 1 initial training will consist of academic training to include use and care of equipment.

18.11.3.3. (Added) Phase 2 training will consist of hands-on training using borescope equipment to inspect engine.

18.11.3.4. (Added) Phase 3 certification will consist of the certifying official evaluating the technician performing borescope inspection procedures. Documentation of qualification will be accomplished on an AF IMT 2426. Technicians will perform a minimum of three flex borescope inspections, supervised by a certifying official prior to initial flex borescope certification.

18.11.3.5. (Added) Those technicians that submit proof of prior flex borescope training on their MDS's applicable model/series powerplant may be waived from Phase 1 and Phase 2 requirements, but must complete Phase 3 training.

18.11.4.1. (Added) Certifying Officials: Each squadron should have a maximum of four technicians to serve as certifying officials designated by letter from the MXG/CC.

18.11.4.2. (Added) The maximum number of certified personnel, to include certifying officials should be limited to twelve personnel per AMU. The Maintenance Squadron should be limited to six personnel. This restriction is to ensure proficiency with flex borescope is maintained.

18.11.6.3. The MTF will document completed training by updating CAMS. The unit-training manager will ensure placement of personnel on the SCR by updating CAMS once the certifying official completes AF IMT 2426.

18.13.9. (Added) See 51 FWI 21-112, *Launch and Recovery of Explosive Loaded Aircraft, End of Runway Procedures, and Hung Ordnance/Jammed Gun Procedures,* for local EOR procedures.

18.13.9.1. (Added) EOR Procedures for Transient Aircraft: With the exception of cross servicing (ROKAF), transient aircraft will not be loaded at Osan Air Base, except by personnel of the parent organization. The MXG Commander can waive this provision.

18.15.2.1. 51 MXG/Weapons Standardization (WS) will manage the A-10 weapons load crew ground training aircraft to meet weapons load crew training requirements.

18.15.2.2.10.6. A letter of agreement between the MTF and MXW will identify the MTF A-10 instructor assigned as dedicated crew chief.

18.15.2.2.11. (Added) 51 MXG/MXW will schedule aircraft for wash at least semi-annually and paint every 3 years.

18.15.2.2.12. (Added) 51 MXG/MXW will inform the MXG commander of the aircraft status as needed.

18.17.1.1. (Added) Aircraft on "SPECIAL SURVEILLANCE" code "E" will not hot pit.

18.17.8. Hot Pit Refueling Procedures: Use unit developed checklist LCL-51 FW-QA-028 for Concurrent Servicing Operations and and LCL-51 FW-QA-029 for Hot Pit Refueling.

18.17.8.1. (Added) AMU Production Superintendents will ensure that the Maintenance Operations Center (MOC) has notified the fire department 30 minutes prior to aircraft scheduled land time to ensure standby fire truck is available.

18.17.8.2. (Added) Ensure AFTO IMT 781H, **Aerospace Vehicle Flight Status and Maintenance**, is annotated by aircrew member with the time and condition of the aircraft after flight. If the aircraft was in-flight refueled or hot pit refueled this data must be entered on the AFTO IMT 781H.

18.17.11.6. (Added) The cursory crew may be comprised of the same individuals performing the hot pit refueling, however, cursory procedures must be accomplished outside the hot pit flow-through.

18.17.11.6.1. (Added) The cursory crew will consist of a supervisor (highly qualified 5 or 7-level aircraft maintenance AFSC) to act as a safety observer and marshal aircraft into the flow-through area.

18.17.11.6.2. (Added) Cursory crew will chock the aircraft, perform cursory check and leave chocks installed until hot pit area is clear.

18.17.11.7. (Added) A hot refueling pad supervisor is required if multiple (simultaneous) refuel operations are being performed in adjoining/connecting flows (example: 16/17, 18/19, and 22/23). A hot pad supervisor will be: 5-level or higher aircraft maintenance AFSC, qualified in the "A" member position, and certified as a hot pad supervisor.

18.17.11.8. (Added) Each AMU will maintain a minimum of three hot pit refueling crews at all times, to consist of three "A" member, and three "B" member qualified personnel. At least two individuals in each AMU will be qualified as hot pad supervisors at all times. A minimum of ten individuals in the 2F0X1 (fuels) AFSC will maintain "C" member qualification at all times.

18.17.16.1. (Added) Training and Certification Requirements:

18.17.16.1.1. (Added) The 51 MOS/MTF will conduct initial hot pit "familiarization" (Phase 1), "demonstration" (Phase 2), and "certification" (Phase 3) training. All personnel performing hot refueling operations will attend Phase 1, 2, and 3 training. MTF will update CAMS using the course codes in Figure 1. The fuels specialist "C" member (2F0X1 AFSC) will attend all three phases of training and be certified by a fuels AFSC certifying official IAW TO 00-25-172/PACAF Sup 1, *Ground Servicing of Aircraft and Static Grounding/Bonding*.

18.17.16.1.1.1. (Added) Demonstration (Phase 2) is supervised by designated instructors. Instructors ensure the individual demonstrates and understands the tasks required prior to evaluation by a qualified certifier. The instructor will not certify the individual being trained. Certification (Phase 3) is accomplished by a qualified certifier. A QA augmentee or TEC (see Figure 1) will certify individuals upon successful demonstration of hot refueling.

18.17.16.1.1.2. (Added) Each AMU must ensure individuals complete Phase 3 certification within 10 duty days after completion of Phase 1 and 2 training. Close coordination between the MTF and the squadron is essential in completing Phase 3 initial certification. Initial certifications will be updated by the MTF on the special certification roster using the CAMS codes listed in Figure 1. Individuals who are not certified within 10 duty days (any position) after initial Phase 1 and 2 training will reaccomplish all phases of hot pit refuel training prior to attempting certification. The MTF will be the final authority for exceptions to these requirements on a case by case basis.

18.17.16.1.1.3. (Added) Dual (multi-MDS) hot refueling qualification on the A/OA-10 and the F-16 aircraft is permitted provided the individual completes both individual MDS Hot Pit training courses, and

maintains certification/rectification, and proficiency requirements for each MDS. Updating in the CAMS will reflect the required qualifications/certifications/proficiency for each MDS as described in Figure 1. CAMS course codes used to document hot refueling certified personnel; "X" designates training required, "C" designates certifications required to perform in the position indicated (Example: shaded area). An individual seeking certification to perform "A" member duties during F-16 hot refueling would require Phase 1, 2, and 3 training (402), and certification (408) by a TEC or QA augmentee. The proficiency course code (403) would be loaded upon initial certification to track performance of at least two hot refuels every 180 days.

18.17.16.1.2. (Added) Each AMU will designate one primary and one alternate QA augmentee to certify operations squadron personnel, if needed. Certifiers will possess a 7 or higher skill level and be qualified in the "A" member and hot pad supervisor positions. QA augmentees are certified by a trainer/evaluator/certifier (TEC) assigned to the MXG QA.

18.17.16.1.3. (Added) Proficiency performance and annual evaluations are required to maintain certified hot pit refueling crews and certifying officials. In order to maintain certification in any hot refueling team position, proficiency and annual evaluation requirements must be met. Failure to comply with either requirement is cause for decertification.

18.17.16.1.3.1. (Added) Proficiency will be maintained by performing the following: TECs, "A" and "B" members will perform at least two hot refuels every 180 days. QA augmentees and hot pad supervisors will perform at least two multiple hot refuels every 180 days. The "C" member will perform at least two hot refuels annually. Proficiency status is tracked on the SCR using CAMS course codes 403 through 407 (F-16) and 773 through 777 (A-10). Work center supervisors are responsible for tracking/updating proficiency status in the CAMS.

18.17.16.1.3.2. (Added) Annual evaluations are required for each of the positions. Annual evaluations are tracked in the CAMS with course codes 408 through 412 (F-16) and 778 through 782 (A-10). Work center supervisors are responsible for tracking/updating annual evaluations and for coordinating the evaluation time and place.

18.17.16.1.4. (Added) Enter, by position, all personnel qualified to perform hot refueling tasks on the SCR. This includes all course codes listed in Figure. 1

TRAINING POSITION	CAMS F16/A10	PROF 2Xevery	ANNUAL EVAL BY	CAMS F16/A10	A	B	PAD SUP	QA AUG	TEC
Phase 1, 2 and 3	402/ 772	1 time	N/A	N/A N/A	X	X	X	X	X
A-member C	403/ 773	180 days	TEC OR QA AUG	408/ 778	C		C	C	C
B-member	404/ 774	180 days	TEC OR QA AUG	409/ 779		C			
Hot pad super	405/ 775	180 days	TEC OR QA AUG	410/ 780			C	C	C
QA augmentee	406/ 776	180 days	QA TEC EPE REQ	411/ 781				C	
TEC	407/ 777	180 days	QA OIC/NCOIC	412 782					C

Figure 1

18.19.2.2.1. (Added) Hangaring Aircraft Procedures:

18.19.2.2.1.1. (Added) Tow team supervisor will ensure the hangar checklist is completed, if required. Checklist is not required for PAS entry; however, it is required for aircraft going through a schedule phase inspection or fuel maintenance in the PAS

18.19.6.5. (Added) Shelter Door Operation Procedures: MOO/SUPT will ensure that a comprehensive PAS door training plan is developed and that only qualified personnel operate shelter doors.

18.19.6.6. (Added) Prior to operating shelter doors, personnel will be thoroughly familiar with normal and emergency door operating procedures. Training will be documented in CAMS. HAS and GEN door operation will be documented as separate course codes.

18.19.6.7. (Added) PAS/hangar owning work center will develop a detailed written door operating procedures (normal and emergency) and post it next to each door operating control unit. The PAS/hangar custodian will be responsible for maintenance and currency of the checklist.

18.19.6.8. (Added) Luminescent or reflective directional arrows will be placed adjacent to each door control switch.

18.19.6.9. (Added) When all PAS in area have same fire symbol, posting of fire symbols is not required at each PAS.

18.20.5. (Added) Procedures for documenting Red Ball (Red X/Red Diagonal) discrepancies are as follow:

18.20.5.1. (Added) Expediters will call in all Red Ball discrepancies to Debrief, with aircraft tail #, Line #, and work unit code.

18.20.5.2. (Added) Expeditors will ensure weapons loaded aircraft are safed prior to any maintenance action.

18.20.5.3. (Added) Debrief will load the discrepancy into CAMS and pass the assigned job control number via radio to the appropriate expediter. Debrief will load the narrative for the discrepancy into CAMS with the words "RED BALL MAINTENANCE" immediately preceding the actual discrepancy.

18.20.5.4. (Added) Expediters will ensure that technicians performing Red Ball maintenance annotate the discrepancy on the aircraft forms using the assigned job control number.

18.20.5.5. (Added) All Red X discrepancies will be cleared from the aircraft forms prior to flight. Personnel clearing the discrepancy will accomplish the AFTO IMT 781A documentation upon completion of the task, perform an FO inspection of the immediate area, and conduct a complete CTK inventory. If the discrepancy occurred after the Exceptional Release was accomplished, the Pro-Super will re-accomplish a new Exceptional Release IAW TO 00-20-1.

18.20.5.6. (Added) (Red-X Only) Every effort must be made to clear Red Ball Red-X discrepancies in CAMS prior to flight. If personnel clearing the Red-X condition cannot access CAMS in a timely manner, expediters may call in corrective action and man-number to debrief. Debrief will in-turn clear the Red-X in CAMS. In the case that CAMS is unavailable, technicians will accomplish an AFTO IMT 349, **Maintenance Data Collection Record**, (or equivalent document) and input the corrective action as soon as possible.

18.20.5.7. (Added) Debrief Section will document Red Ball discrepancies on the daily discrepancy sheet. Red Ball discrepancies and corrective actions will be reviewed at the daily production meeting.

18.23.2.11. All units (including TDY units) will ensure FOD walks are accomplished at the start of each flying day and throughout the day as needed in their assigned aircraft parking areas, hangers and adjacent taxiways. (See **Attachment 7**)

18.23.2.11.1. (Added) End of Runway (EOR) crews will conduct a FOD walk of the arm and de-arm areas prior to aircraft taxi.

18.23.2.20. (Added) All maintenance vehicles normally driven on the flightline will be equipped with FO containers, secured to prevent overturning. All vehicle containers will be emptied when full or once a day, whichever comes first. Operators of bomb lifts, staff cars, forklifts, and other special purpose vehicles where use of a FOD can is impractical must ensure FO does not accumulate in their vehicles.

18.23.2.21. (Added) FOD checks of all vehicles and tires will be completed at all entry control points/ vehicle FOD checkpoints. The vehicle operator will shut off the engine, engage the parking brake or chock the vehicle if it does not have an operational parking brake. Vehicle operators will ensure their vehicle is FOD free (tires, inside and outside of vehicle), to include removal of accumulated snow in wheel wells, prior to each entry into the flightline area. In addition, if the vehicle is towing any type of equipment (i.e., AGE equipment, trailers etc.) the vehicle operator will inspect all tires on the towed equipment. Vehicles requiring access to the flightline during the hours of darkness will have a flashlight to perform FO inspections. When emergency response/security vehicles (i.e., ambulances, security forces and fire department vehicles) are responding ***directly*** to real world in-flight or ground emergencies, are exempt from performing FOD tire checks at any/all entry control points that access the flightline. These ground emergencies for Security Forces vehicles included ***real world*** Helping Hand, Covered Wagon or to apprehend personnel already in or attempting access to restricted flightline areas. The FOD tire exception is only permitted when time is essential in responding to the emergency. Additionally, Ramp Sweepers will be dispatched through/by Base Operation via ramp net to reduce any FOD potential.

18.23.2.22. (Added) Driving off paved surfaces or onto AM-2 matting surfaces is discouraged, unless blocking a taxing aircraft or emergency vehicle. If a vehicle has been off a paved surface, a thorough FOD and tire check is mandatory before driving onto the flight line.

18.23.2.23. (Added) Only aircraft/munitions tow vehicles and two wheel drive fire department vehicles are authorized to use chains on taxiways or ramps. The tow vehicle operator may use chains only when towing and snow or ice accumulation warrants the need. All vehicle operators are responsible for ensuring chains are of closed link design (no “C” or “S” links) and checked for FOD potential before each use.

18.23.2.24. (Added) All non-self-locking pintle hooks will have pin installed and secured to the vehicle or support equipment by means of chain or wire rope. All self-locking pintle hooks will be checked for closure by pulling up on the tow bar (of the equipment being towed) three times.

Pintle hook latch will be closed at all times.

18.23.2.25. (Added) Studded snow tires are not authorized on any vehicle driven on the flightline.

18.23.2.26. (Added) Any tool/item found within the flightline/MXG areas that cannot be positively identified to its owner/source will be reported at a minimum to squadron supervision and QA.

18.24.1. The wing Avionics manager will act as the group RWR/RTHW manager. The AMXS commander appoints a primary and alternate RWR/RTHW monitor for each AMU to oversee and manage activities relating to RWR/RTHW testing. The monitors should be at a minimum a 5 level in AFSC 2A3X1X (A-10) or AFSC 2A3X2 (F-16).

18.24.1.3. (Added) Hand signals will be utilized as the primary means to communicate with pilots during testing. A thumbs up indicates a good test and the symbology is correct. A thumbs down indicates a failed test. Pilots should identify the failed quadrant to the ground crew by signaling the respective quadrant number on the board and giving a thumbs down (i.e., one finger is quadrant one, two fingers quadrant two etc.). A ground cord and headset will be available as an alternate means and only utilized if the pilot indicates it is necessary.

18.24.1.4. (Added) AMU monitors will send RWR/RTHW testing results to the RWR/RTHW manager the day after testing is accomplished. The manager will compile the data collected from all reliability checks, produce a status report, and forward to the wing EWO.

18.24.2. (Added) 51 OSS/OSP, Wing Electronic Warfare Officer (EWO).

18.24.2.1. (Added) Serve as primary point of contact for 25/36th Fighter Squadron (FS) Electronic Combat Pilots (ECP) regarding RWR/RTHW testing program issues.

18.24.2.2. (Added) Ensure FS pilots are aware of proper RWR/RTHW testing program operating procedures.

18.24.2.3. (Added) Identify the simulated threat profiles to be utilized during RWR subsystem checks.

18.24.2.3.1. (Added) Coordinate simulated threat selection with 25/36 FS ECPs as necessary.

18.24.2.3.2. (Added) Ensure simulated threat selection is communicated to 25 AMU and 36 AMU for use by the RWR/RTHW testing site team.

18.24.3. (Added) RWR/RTHW manager:

18.24.3.1. (Added) Maintain a continuity folder containing as a minimum: RWR/RTHW manager and squadron monitor letter of appointment, copies of RWR/RTHW correspondence and RWR/RTHW reports for the previous 12 months.

18.24.3.2. (Added) As part of a regularly scheduled activity inspection, semi-annually inspect and evaluate AMU RWR/RTHW program.

18.24.3.3. (Added) Establish a schedule for conducting RWR/RTHW testing during peacetime operations.

18.24.4. (Added) AMU RWR/RTHW monitors will:

18.24.4.1. (Added) Ensure RWR/RTHW testing is conducted during the first launches IAW this instruction, locally approved checklists and the schedule published by the RWR/RTHW manager.

18.24.4.2. (Added) Ensure availability and serviceability of RWR test equipment for required RWR/RTHW testing.

18.24.4.3. (Added) Ensure all RWR/RTHW check results are accurately documented on the RWR/IFF worksheet.

18.24.4.4. (Added) Maintain a continuity folder containing as a minimum: RWR/RTHW manager and squadron monitor letter of appointment, copies of RWR/RTHW correspondence and AMU RWR/RTHW check results for the previous 12 months.

18.24.5. (Added) RWR/RTHW testing General Guidelines:

18.24.5.1. (Added) The RWR/RTHW testing location will be in place before the first launches of the day.

18.24.5.2. (Added) During peacetime operations set up the test site at the top of Taxiway "A" (see **Attachment 8**) or as noted in the schedule published by the RWR/RTHW manager. Notify Airfield Management at least 24 hours prior if the location needs to change.

18.24.5.3. (Added) During Exercises/Contingencies, two test sites will be set up. Both sites will be utilized as long as the possibility of bi-directional operations exists. This will ensure that all aircraft are checked even if the active runway changes. The location for the RWR pits (see Attachment 10) is defined below:

18.24.5.3.1. (Added) At the East end of Taxiway "F," in the dogleg with Taxiway "E" just before the 27 End of Runway.

18.24.5.3.2. (Added) In the arming area off of Taxiway "F" at the 09 End of Runway.

18.24.5.4. (Added) Monitor the RAMP net to facilitate the break down and set up of the test site to accommodate movement of large aircraft in the area if necessary.

18.24.5.4.1. (Added) Must have connectivity with Mission Director to ensure real-time knowledge of current runway status (bi-directional ops / single runway ops) if operating only one RWR pit.

18.24.5.5. (Added) All individuals associated with RWR/RTHW testing will be familiar with test location operating procedures and fully qualified to conduct their required duties.

18.24.5.6. (Added) RWR/RTHW roll through tests will be conducted IAW Local Checklists.

18.24.5.7. (Added) Pilots will taxi slowly into the test location and compare symbology on the RWR scope with the RWR threat board. Pilots should stop if any symbology is missing to allow the technician to reposition the test set.

18.24.5.8. (Added) Only an airframe-qualified person (25 AMU for A/OA-10, 36 AMU for F-16) should approach an operating aircraft when interphone communications are necessary.

18.24.5.9. (Added) Notify the respective debrief or specialist section of failed test results for post flight validation with the aircrew.

18.24.5.10. (Added) Conduct follow-up actions (for their respective airframes) to validate any failures and perform necessary corrective actions.

18.24.5.11. (Added) Ensure all validated failures are entered into CAMS and the AFTO IMT 781A.

18.24.6. (Added) RWR and IFF Mode IV Contingency/Exercise Procedures:

18.24.6.1. (Added) RWR and IFF Mode IV testing will be accomplished in a manner consistent with the procedures identified in paragraphs 18.24 and 18.27.

18.24.6.2. (Added) Survivability is the key factor during contingencies/exercises. Personnel will make every attempt to limit their exposure and seek shelter when not actively engaged in testing operations.

18.24.6.3. (Added) Flightline maintenance supervision should check on RWR/RTHW team periodically and/or immediately following an attack. Communications between the RWR/RTHW team and flightline operations must be maintained in order to verify survivability of the team and reduce downtime of the test site in the event of casualties or equipment damage.

18.24.6.4. (Added) All RWR/RTHW test equipment will have M8/M9 applied (simulated as necessary for exercises) to or next to them. Testers will be removed from the open ramp as necessary or covered to limit exposure when not in use. The RWR/RTHW team supervisor determines the frequency and extent of this activity.

18.24.6.5. (Added) IFF/RWR reports must be sent to the Maintenance Operations Center at the end of the flying day.

18.24.6.6. (Added) The Mission Director is the only person authorized to modify or relocate RWR/RTHW testing activities.

18.24.7. (Added) The wing EWO and wing Avionics Manager will serve as POCs for deployed units supporting the 51 FW.

18.25.4.1. (Added) The wing Avionics Manager will act as the group AIP project officer. The group AIP project officer will maintain a continuity folder containing as a minimum: group AIP project officer and squadron monitor letter of appointment and copies of AIP correspondence.

18.25.5.1.1. (Added) The 25 and 36 AMUs are responsible for submitting FDR data and computer files as required.

18.25.5.2.1. (Added) AMXS commander appoints a primary and alternate AIP monitor for each AMU to oversee and manage activities relating to AIP. The monitors should be at a minimum a five level in AFSC 2A3X1X (A-10) or AFSC 2A3X2 (F-16).

18.25.5.4.1. (Added) 25 AMU AIP monitor will ensure training includes use of AFTO IMT 11, **A-10 Recording System Status (LRA)**.

18.25.5.4.2. (Added) 36 AMU AIP monitor will ensure training includes procedures on use of the F-16 ASIP reports web site, **http://asip.tinker.af.mil/f16/**.

18.25.5.5.1. (Added) AIP training will be documented in the individuals training records.

18.25.5.6.1. (Added) The group AIP project officer and the AMU AIP monitors will work with OC-ALC, Tinker AFB to reconcile any erroneous or missing data in order to maintain AIP data integrity.

18.27.1. The wing Avionics Manager will act as the group MODE IV/MODE-C manager. The AMXS commander appoints a primary and alternate MODE IV/MODE-C monitor for each AMU to oversee and manage activities relating to IFF. The monitors should be at a minimum a five level in AFSC 2A3X1X (A-10) or AFSC 2A3X2 (F-16).

18.27.1.1. (Added) AMUs will conduct IFF MODE IV/MODE C checks with aircraft in chocks prior to taxi.

18.27.1.2. (Added) Hand signals will be utilized by AMUs as the primary means to communicate with pilots during testing. A thumbs up indicates a good test and a thumbs down indicates a failed test. A ground cord and headset will be available as an alternate means and only utilized if the pilot indicates it is necessary.

18.27.1.3. (Added) The requirement to code IFF MODE IV will be documented on the aircraft's AFTO IMT 781A Info Note page as, "Mode IV keyed for Zulu: Code 'A': YYYYMMDD, Code 'B': YYYYMMDD", where YYYYMMDD is the date for which the Mode IV is keyed.

18.27.2.2. AMU monitors will send IFF MODE IV/MODE C check results to the MODE IV/MODE-C manager the day after testing is accomplished. The MODE IV/MODE-C manager will compile the data collected from all IFF reliability checks and produce an IFF MODE IV/MODE C status report. The report will be forwarded to the wing ECP.

18.27.3. (Added) 51 OSS/OSP, Wing Electronic Combat Pilot (ECP).

18.27.3.1. (Added) Ensure FS pilots are aware of proper IFF MODE IV/MODE-C reliability program operating procedures.

18.27.4. (Added) Group MODE IV/MODE-C manager.

18.27.4.1. (Added) Maintain a continuity folder containing as a minimum: MODE IV/MODE-C manager and squadron monitor letter of appointment, copies of IFF correspondence and MODE IV/MODE-C reports for the previous 12 months.

18.27.4.2. (Added) As part of a regularly scheduled activity inspection, semi-annually inspect and evaluate AMU MODE IV/MODE-C program.

18.27.5. (Added) AMU MODE IV/MODE-C monitors:

18.27.5.1. (Added) Maintain a continuity folder containing as a minimum: MODE IV/MODE-C manager and squadron monitor letter of appointment, copies of IFF correspondence and AMU MODE IV/MODE-C check results for the previous 12 months.

18.27.5.2. (Added) Ensure availability and serviceability of required IFF test equipment for IFF testing operations.

18.27.5.3. (Added) Ensure appropriate entries are made in the AFTO IMT 781A and the Core Automated Maintenance System (CAMS) to reflect all discrepancies found during MODE IV/MODE-C checks.

18.30.2.1.1. (Added) The Aircraft Maintenance Flight Chief or designated representative will assume duties of crash recovery supervisor under the direction of the fire chief in responding to all aircraft emergency situations. The crash recovery supervisor is responsible for the actions of the crash recovery crews in all aircraft emergency and crash recovery operations.

18.30.2.1.1.1. (Added) Crash and Recovery will:

18.30.2.1.1.1.1. (Added) Ensure a minimum of three personnel are available for all in-flight/ground emergency initial responses

18.30.2.1.1.1.2. (Added) Have knowledge of the following specific procedures: emergency response, barrier engagements, hot brakes, blown tire response and use of wheel dollies, crash site survey, aircraft hoisting using crane, aircraft hoisting using pneumatic bags and wide-bodied aircraft.

18.30.2.1.1.1.3. (Added) Ensure crash recovery crews respond to all in-flight and aircraft ground emergencies with the necessary equipment as determined from information provided by Osan Base Operations.

18.30.2.1.1.1.4. (Added) Act as the 51 MXG/CC's representative for the supervision of the removal and recovery of all disabled and crashed aircraft from the active runway, taxiways, or incident site on or off-base, as directed by the 51 MXG within the capabilities of the 51 FW.

18.30.2.1.1.1.5. (Added) Ensure that the on-scene commander or senior fire department official has released the aircraft before employing the crash recovery crew.

18.30.2.1.1.1.6. (Added) The crash recovery crew will tow emergency aircraft clear of the active runway or taxiways. The transient alert section chief or representative in conjunction with the MXS Production Supervisor will determine if the crash recovery crew will tow the aircraft to the AMU designated parking spot based on available manning and mission requirements. If required to respond to another IFE/GE; the owning organization will tow locally assigned aircraft to their specific parking location. The crash recovery crew will tow transient aircraft to parking location

18.30.2.1.2. (Added) If damage is discovered or suspected making taxiing unsafe, the crash recovery crew will install all applicable ground safety equipment prior to engine shutdown if feasible. Safe cockpit after engine shutdown.

18.30.2.1.3. (Added) The crash recovery crew will respond to aircraft suspected of having hot brakes. They will determine if brakes are actually hot and advise the senior fire department official.

18.30.2.1.4. (Added) Relocate EOR operations outside of the 300-foot radius danger area when an aircraft with actual hot brakes enters the EOR area. All other aircraft and personnel in the danger area not directly involved with the emergency must relocate as soon as possible.

18.30.2.1.5. (Added) Aircraft loaded with ordnance and having hot brakes will not have maintenance or weapons safed until brakes cool down.

18.30.2.1.6. (Added) Crash Recovery will check hot brakes 30 minutes after declaration and/or under direction of the on scene fire chief and in 15-minute intervals thereafter to evaluate cool down and advise the Fire Dept. (See 51 FWI21-112)

18.30.2.3.1. (Added) The crash recovery supervisor will determine equipment and/or support requirements for crashed and disabled aircraft after a physical assessment of the aircraft.

18.30.2.3.2. (Added) Equipment and support requirements beyond the capabilities of the 51 FW will be referred to 7 AF/LGM prior to submitting requests.

18.30.3.3. Accomplish and document inspections and perform operational checks of crane, tow vehicles, tow bars, disabled wheel dollies, axle jacks, blowers, generators and crash recovery tractor-trailer weekly. Document inspections on AFTO IMT 244.

18.30.5.1.1. (Added) The Aircraft Maintenance Flight Chief will ensure crash recovery crewmembers satisfy qualification and duty prerequisites. In addition, the flight chief will appoint a training monitor to ensure all assigned personnel receive initial and recurring training on: Aircraft sling lift, aircraft belly band lift, pneumatic bag lift, disabled wheel dolly towing, barrier engagement and emergency response procedures.

18.30.5.1.2. (Added) Ensure requirements to support crash recovery training are preplanned and scheduled in the monthly maintenance plan.

18.30.5.1.3. (Added) Develop and maintain a logbook or file to record scenario types and equipment employed. Ensure only those personnel who were actually involved are credited with completion of training requirement when actual aircraft emergencies are used to satisfy the intent of quarterly training requirements.

18.30.5.2. AMU OIC/Superintendent Responsibilities:

18.30.5.2.1. (Added) Identifies AMU OAP monitor and alternate by appointment letter and forwards a copy to the Wing OAP Manager and the OAP Laboratory. The appointment letters should include grade, name, duty phone, AFSC, organization, office symbol and DEROS.

18.30.5.2.2. (Added) The AMU OAP monitor will be a NCO with the authority and experience necessary to manage the AMU's program. They serve as the primary liaison between their AMU and the OAP lab for all OAP issues and should attend all OAP meetings involving their AMU.

18.30.5.2.3. (Added) Ensures OAP Manager Familiarization Training is scheduled and completed within 7 days of appointment (training shall be conducted by OAP lab personnel only).

18.30.5.2.4. (Added) Ensures aircraft that fail to meet the required OAP sample response time or are not sampled as required by applicable -6 are not flown until the OAP sample results are known.

18.30.5.2.5. (Added) Ensures OAP samples meet the required time period by the applicable -6. This ensures a true homogenous sample is obtained for an accurate analysis.

18.30.5.2.6. (Added) Ensures OAP samples are delivered to the OAP lab with a DD Form 2026 or locally overprinted DD Form 2026, Oil Analysis Request, filled out IAW TO 33-1-37-1, **Joint Oil Analysis Program Manual Volume I-Introduction Benefits, Customer Sampling Procedures, Programs and Report**.

18.30.5.2.7. (Added) Ensures flightline personnel verify with the OAP lab that the information entered in the OAP records matches during scheduled aircraft records checks. Verify, as a minimum, engine flight time, time since oil change, oil serviced since last records check OAP sample, engine serial number(s) and aircraft serial number. NOTE: Wing OAP manager or designated representative may waive verification of OAP records against aircraft records when aircraft are deployed and the scheduled aircraft records check is due.

18.30.5.2.8. (Added) Ensures the flightline expeditors maintain an OAP status on each assigned aircraft showing all lab recommendation codes that are non-routine (code A) next to the aircraft serial number. Prior to commencing the flying day, verify status of aircraft or engines on special surveillance.

18.30.5.2.9. (Added) Ensures personnel drawing oil samples are properly trained on sampling procedures and forms documentation.

18.30.5.2.10. (Added) Ensures "RED CAP" samples are delivered to OAP lab by most expeditious means available, identifying each sample on envelope and DD Form 2026 (red borders) as "RED CAP" to indicate priority sample analysis.

18.30.5.2.11. (Added) Ensures a "Red X" entry is placed in appropriate AFTO IMT 781A as "RED CAP or Special Surveillance sample required", awaiting OAP Lab results.

18.30.5.2.11.1. (Added) "Red X" entry shall only be cleared once OAP lab personnel have analyzed sample and acceptable results have been obtained.

18.30.5.2.12. (Added) Ensures cross-country OAP paperwork is requested at least 1 duty day prior to scheduled aircraft departure (Friday if scheduled departure is on Monday).

18.30.5.2.13. (Added) Ensures cross-country OAP paperwork is returned immediately upon return to home station.

18.30.5.2.14. (Added) Ensures oil servicing carts are sampled weekly; delivered to the OAP lab before any servicing of aircraft.

18.30.5.2.15. (Added) Ensures status of deployed or out of service oil carts is identified to OAP lab each Monday.

18.30.5.2.16. (Added) Ensures servicing carts not sampled weekly are removed from service and a "Red X" placed in AFTO IMT 244 pending analysis results.

18.30.5.2.17. (Added) Ensures carts with visible contamination are immediately removed from service, drained, inspected for source of contamination, flushed and serviced. A resample shall be taken after servicing and delivered to OAP lab for analysis.

18.30.5.2.18. (Added) Ensures all aircraft engines under OAP code D are not operated until discrepancies are corrected and verified with the OAP lab. NOTE: Code D identifies DD Form 2026 discrepancies that are essential to oil analysis trending and removes that engine from service until the discrepancy is corrected. These discrepancies are equipment and end item serial number, hours since overhaul (engine flight time), hours since oil change, and oil added since last sample taken.

18.30.5.2.19. (Added) Ensures DD Form 2026 with missing, illegible, incorrect or incomplete data is corrected as soon as possible.

18.30.5.2.20. (Added) Ensures maintenance actions affecting oil-wetted components are provided to the OAP lab using the remarks section of the DD Form 2026 or a suitable local form.

18.30.5.3. (Added) Ensures all automated OAP records are delivered to the OAP lab within 24 hours of receipt.

18.30.5.4. (Added) Ensures OAP lab is provided complete daily flying schedule for surges and contingency exercises.

18.30.5.5. (Added) Ensures aircraft requiring “RED CAP” or Special Surveillance Samples are not flown/operated until sample results are known.

18.30.5.6. (Added) Ensures aircraft airborne when “RED CAP” status is identified are sampled immediately upon return to parking.

18.30.5.7. (Added) Ensures organizations are immediately notified of oil servicing carts not received weekly.

18.30.5.8. (Added) Will be the sole point of contact for 51 FW OAP manager and monitors.

18.30.5.9. (Added) Provide OAP familiarization training for all OAP monitors and dedicated crew chiefs in MTF, given 1-week notice.

18.30.5.10. (Added) Maintain an OAP Status board consisting of all assigned and deployed on station aircraft and installed engines, current OAP codes, spare engines, oil carts and unit assigned to.

18.30.5.11. (Added) Maintain a log of oil analysis records for all cross-country or deployed aircraft and engines. The log will consist of aircraft tail number, engine serial number, date/time picked up, personnel picking up record, date/time record returned to OAP Lab, and initials of person who reviewed and filed records.

18.30.5.12. (Added) Maintain a daily sample control log with sample number, aircraft tail number, engine number, time sample taken, time sample received, time results called in to MOC, person contacted at MOC, sample results, and OAP Lab personnel initials.

18.30.5.13. (Added) Ensure copies of Oil Analysis Records are available upon request and accompany all aircraft and engines deploying or transferring to other installations.

18.30.5.14. (Added) Contact the responsible AMU when oil analysis record of cross-country or deployed aircraft are not returned to the OAP Lab within 24 hours of their return to home station.

18.30.5.15. (Added) Conduct daily reviews of all aircraft and engines requiring “special surveillance” sampling.

18.30.5.16. (Added) Notify MOC of oil servicing carts not received weekly and place non-sampled carts on code “P” (*do NOT operate, and do NOT change oil)*.

18.30.5.17. (Added) Process Transient Alert samples on priority basis and provide Transient Alert personnel with results on a DD Form 2026 or automated OAP record to be filed in the aircraft forms prior to departure.

18.30.5.18. (Added) Immediately notifies MOC of DD Form 2026 received with missing, illegible, incorrect or incomplete data. Samples cannot be processed until erroneous data is corrected. OAP lab assigns these aircraft/engines code “D.” Code “D” includes incorrect/incomplete aircraft tail number, engine serial number, hours since overhaul (engine flight time), hours since oil change and oil added since last sample.

18.30.5.19. (Added) Allows a correction factor of +/- 10 flight hours before assigning a code “D” for hours since overhaul and hours since oil change.

18.30.5.20. (Added) DD Form 2026 will have errors corrected immediately. However, customers will be provided a 30 minute grace period before errors are charged against the monthly error percentage. Corrective actions may be accomplished by any means available (telephone, MOC, etc.)

18.30.5.21. (Added) Provide monthly OAP report to the Wing OAP manager and all section/organizational OAP monitors (OAP report will include the number of routine and redcap samples processed, OAP lab recommendations/recommendations confirmed, average OAP sample response time, number of OAP samples exceeding response time, number of OAP samples not taken as required and total number DD Form 2026 errors).

18.30.5.21.1. (Added) Additionally, non-grounding errors will be tracked and reported monthly along with this report. These discrepancies include incorrect/incomplete date/time of sample, time sample taken, reason for sample, and employee number. These items are critical to the OAP; however, they are not necessary for trend analysis and will not warrant a code "D" grounding condition.

18.30.5.21.2. (Added) Ensures samples are processed, analyzed and reported to MOC immediately but not later than 75 minutes after receipt.

18.30.5.21.3. (Added) Ensure essential information is filled in and correct on DD Form 2026s prior to oil analysis.

18.30.5.22. (Added) OAP Lab tracks aircraft OAP sample response times for all assigned aircraft to ensure the response time compliance.

18.30.5.23. (Added) Transient maintenance personnel will deliver samples for transient aircraft with completed DD Form 2026 and transient OAP paperwork (if available) to OAP lab and allow sufficient time for sample processing and return of paperwork prior to aircraft departure.

18.30.5.24. (Added) Transient maintenance personnel will retrieve processed OAP paperwork and return it to transient aircraft forms prior to departure.

18.30.6. (Added) Oil Cart Procedures:

18.30.6.1. (Added) OAP lab ensures carts exceeding Table 1 criteria, after analysis of resample, are placed on code "J" *(Drain and Flush)*, removed from service, drained, flushed and cleaned. A resample will be taken after servicing and delivered to OAP lab for analysis.

18.30.6.1.1. (Added) Table 1 – Oil Servicing Cart Criteria.

Fe	Ag	Al	Cr	Cu	Mg	Na	Ni	Pb	Si	Sn	Ti	B	Mo	Zn
0-1	0-1	0-1	0-1	0-1	0-1	0-2	0-1	0-2	0-3	0-6	0-1	0-2	0-1	0-2

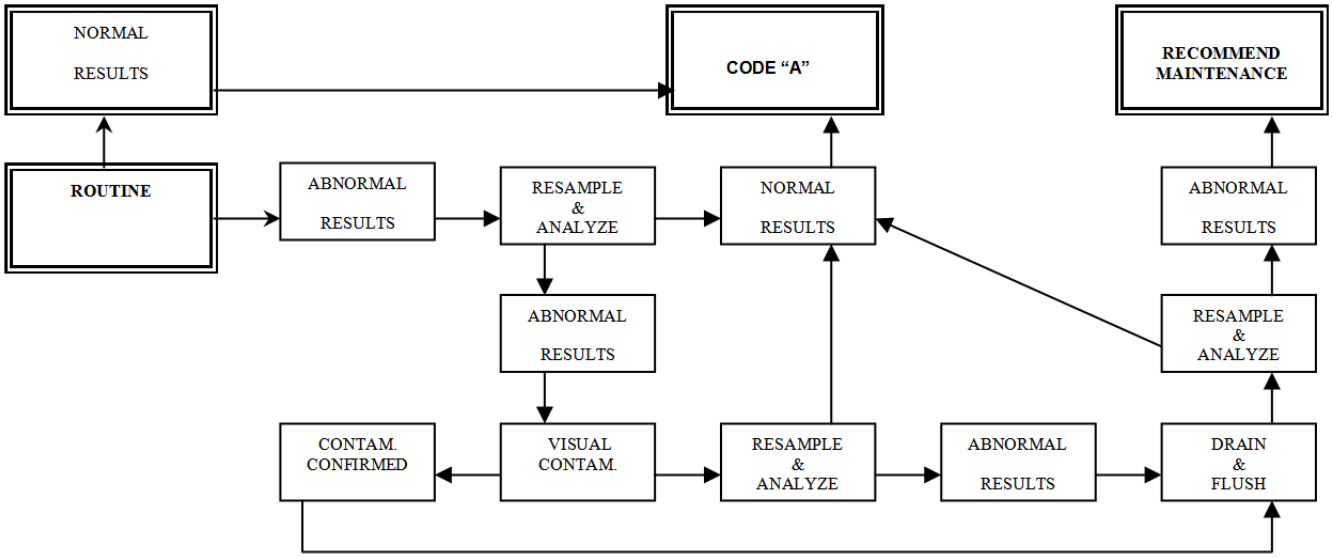

18.30.7. Engine Guidance:

NOTES:

1. For purposes of OAP trend analysis; the replacement, replenishment or drain and flush of lubricating fluids in excess of half an engines oil capacity will be considered an "Oil Change" and require a minimum of three 15 minute ground/maintenance runs with samples taken after each 15 minute run to rebuild trend baseline or place aircraft on Code "C" for three flights.
2. Oil Wetted Maintenance (OWM) is any maintenance of engine components within an oil lubricated system (bearings, gearbox, pumps, etc.). OWM actions shall be documented on a DD Form 2026 and submitted to OAP lab for update of AETC database.
3. Aircraft on "SPECIAL SURVEILLANCE" code "E" will not hot pit.
4. Drain and flush procedures should only be conducted after consulting OAP lab and 51 MXS Propulsion Flight personnel to verify no adverse trends are present. Inadvertent use of this procedure can mask or hide impending component failures.

18.30.7.1. (Added) New/Rebuilt/Overhauled Engines:

18.30.7.1.1. (Added) Will be placed on code "Q" for 10 flights or 20 flight hours (whichever occurs first). Surveillance period is necessary to effectively monitor "break in" of newly installed engine components.

18.30.7.1.2. (Added) Will be placed on code "E" for remaining flights/flight hours as a precautionary measure if wear metal concentration rise into marginal, high or abnormal ranges.

18.30.7.1.3. (Added) On code “E” SHALL NOT fly cross-country unless waived, in writing, by 51 MXG/CC.

18.30.7.1.4. (Added) Cross-country defined as sortie scheduled to depart Osan AB and land at any location other than the Korean Peninsula.

18.30.7.2. (Added) Non-Installed/Spare Engines:

18.30.7.2.1. (Added) Are maintained on code “F” pending installation. Post installation OAP code will be assigned depending on type/extent of maintenance performed while engine was in maintenance.

18.30.7.2.2. (Added) With oil wetted maintenance and oil change; will require a minimum of three 15 minute maintenance/ground runs in accordance with applicable technical order. Samples may come in any combination provided they are drawn and analyzed between each run and prior to next scheduled sortie. Samples received from test cell runs may count towards cumulative total of three maintenance runs. Aircraft may be placed on code “C” in lieu of ground runs for three flights

18.30.7.2.2.1. (Added) Will be placed on code “Q” for five flights after receipt of installation run sample.

18.30.7.2.3. (Added) With OWM and no oil change; will require analysis of post maintenance run sample.

18.30.7.2.3.1. (Added) Will be maintained on code “F” pending installation.

18.30.7.2.3.2. (Added) Will be placed on code “Q” for five flights after receipt of installation run sample.

18.30.7.2.4. (Added) With oil change and no OWM; will require three runs IAW applicable technical order with samples analyzed between each run or placed on code “C” for three flights.

18.30.7.2.5. (Added) Will be placed on code “A” after receipt of post installation run sample, providing no marginal, high or abnormal wear metal concentrations exist.

18.30.7.3. (Added) Reasons for Surveillance:

18.30.7.3.1. (Added) Engines received with inadequate or no historical data (“C” or “E”).

18.30.7.3.2. (Added) Engines received from depot with questionable test cell readings (“C” or “E”).

18.30.7.3.3. (Added) After an oil change, readings show marginal, high or abnormal wear metal concentrations after initial test cell/maintenance runs (“E”, “R”, “H” or “T”).

18.30.7.3.4. (Added) Any sample with concentrations rising into marginal or high ranges (“F”, “C” or “E”).

18.30.7.3.5. (Added) After completion of any OWM (“Q” or “E”).

18.30.7.4. (Added) MXG/CC Responsibilities:

18.30.7.4.1. (Added) Ensures the NDI facility is on a priority repair list with base Civil Engineering (CE) for the purpose of expediting the repair of disabled SEM/EDX and lab environmental control measures.

18.30.7.5. (Added) All organizations requiring recurring MCD analysis will identify, in writing, primary and alternate MCD managers for their respective unit. Letters will include name, rank, duty phone and DEROS. Letter will be updated annually or when personnel change.

18.30.7.6. (Added) Ensure MCD is delivered to NDI for analysis with a completed 51 FW IMT 7, Fire Symbol Log, MCD Debris Analysis, including the following information: AMU, A/C serial number,

engine serial number, engine flight time, date/time, visual chips, reason for analysis request and daily sortie number.

18.30.7.7. (Added) Ensure MCD documentation errors are corrected immediately when notified by the NDI lab.

18.30.7.8. (Added) Notify NDI lab for priority processing of MCD if particles exceed limits established in TOs 1F-16C-2-70FI-00-11 or 1U-2S-2-4SS-10.

18.30.7.8.1. (Added) Issue additional MCD to AMU on a one-for-one basis. MCDs will not be issued without a replacement.

18.30.7.8.2. (Added) MCD received with documentation errors SHALL NOT be processed until errors are corrected; incorrect, missing or illegible data can result in erroneous maintenance recommendations.

18.30.7.8.3. (Added) Consult 51 MXS Propulsion Flight when MCD criteria issues arise.

18.30.7.8.3.1. (Added) Immediately notify 51 FW MOC of MCD analysis results (Level 0-3)

18.30.7.8.3.1.1. (Added) Level 0 – All items read 0 Total Risk Factor (TRF)

18.30.7.8.3.1.2. (Added) Level 1 – Material Detected, but Within Limits

18.30.7.8.3.1.3. (Added) Level 2 - *WARNING* Material Limit Exceeded

18.30.7.8.3.1.4. (Added) Level 3 - *WARNING* Severe Amount of Material

18.30.7.8.3.1.5. (Added) Immediately notify MCD results indicating significant levels (2 & 3) of "M50" material or other critical elements to MOC, 51 MXS Propulsion Flight and 51 MXS Production Superintendent. MOC will immediately contact appropriate AMU Supervision to determine if restrictions will be made regarding flying.

18.30.7.8.3.2. (Added) When SEM/EDX unit is down for maintenance or when deployed to a remote location without SEM/EDX capabilities, follow visual inspection procedures IAW applicable engine TO MCD analysis by SEM/EDX does not circumvent visual MCD checks by flightline personnel regardless of SEM/EDX capabilities at home station or deployed locations

18.30.7.8.3.3. (Added) Immediately notify 51 MXS Fabrication Flight Chief, MOC, and 51MXS Propulsion Flight when SEM/EDX equipment becomes inoperable.

18.30.7.8.3.4. (Added) Immediately notify 51 MXG/CC, PACAF/LGMFB and HQ PACAF/LGMFE if equipment will be down for a period greater than 24 hours or requiring outside agencies assistance in repair.

18.30.7.9. (Added) Ensure current SEM/EDX status is maintained for all aircraft not identified as Level 0.

18.30.8. (Added) AMU Officer in Charge (OIC)/Superintendent will:

18.30.9. (Added) Ensure flightline MCD program is managed IAW this regulation.

18.30.10. (Added) Ensure visual inspection of MCD is performed IAW applicable technical orders.

18.30.11. (Added) Ensure MCD are submitted for analysis within 75 minutes of engine shutdown. MCD particulates not meeting TO 1F-16C-2-70FI-00-11 or 1U-2S-2-4SS-10 limits shall have MCD submitted for immediate analysis. Those requiring immediate analysis shall be identified on the bag in red "EXCEEDED LIMITS – ANALYZE IMMEDIATELY".

18.30.12. (Added) Ensure MCD are submitted for analysis per applicable -6 requirements.

18.30.13. (Added) Ensure appropriate AFTO IMT 781A entries are made when MCD is submitted. (As a minimum, Red "-" entries will be required; should flake, chunk, silver or excessive fuzz be noted the Red "X" entries will be required.)

18.30.14. (Added) Ensure a means of maintaining current SEM/EDX status is established and utilized by expeditors for all assigned aircraft.

18.30.15. (Added) 51 MXS Propulsion Flight will:

18.30.15.1. (Added) Ensure MCD are visually inspected by test cell personnel and delivered to NDI lab for analysis after each engine run.

18.33. (Added) IMTs Prescribed: 51FW IMT 26, **Quarterly Jacket File Inspection Checklist,** 51FW IMT 27, **F-16 Document Review**, 51FW IMT 28, **A-10 Aircraft Records Check**, 51FW IMT 57, **Aircraft/Equipment Impoundment Checklist.**

Attachment 1

FLIGHT CONTROL PROGRAM

A1.1. The Flight Control Program: The following procedures will be strictly adhered to for all serious or recurring flight control problems. A Fight Control Maintenance Team (FCMT) will be formed by the AMU OIC/NCOIC to troubleshoot and repair aircraft that have experienced a serious or recurring flight control malfunction. Serious flight control malfunctions are defined as the following:

A1.1.1. Uncommanded/Unexplained Flight Maneuver (UFM) is defined as an aircraft motion that is uncommanded/unexpected by the pilot is not readily related to jet wash, possible wind shear, or turbulence; and, that is usually not accompanied by caution lights that could explain aircraft motion.

A1.1.2. Third consecutive flight control malfunctions are defined as the aircraft experiencing a third consecutive occurrence (second repeat) of the same flight control malfunction. All aircraft experiencing a third consecutive occurrence of the same flight control malfunction will be impounded.

A1.1.3. Chronic/ high number of recurrences of flight control malfunctions are defined as flight control malfunctions that happen sporadically, intermittently, and may not be exactly the same malfunction. The key word is “recurring”. If several flight control malfunctions are duplicated, isolated, and repaired, the malfunction may not require an extensive diagnostic action. However, if a trend is indicated, the flight control problems will be considered chronic and the aircraft will be impounded.

A1.1.4. Autopilot or auto fly up malfunctions are defined as malfunctions which result in autopilot, direct manual mode, or autopilot mode disengagement.

A1.2. QA Responsibilities:

A1.2.1. Will monitor, assist, and act as technical advisors on all flight control related impoundments

A1.2.2. Review AFTO IMT 781A, Maintenance Discrepancy and work Document and Abort/Investigation records on a daily basis while aircraft is impounded.

A1.2.3. Coordinate with the MOO/SUPT to determine Operational Check Flight (OCF) or Functional Check Flight (FCF) requirements.

A1.3. Flight Control Maintenance Team:

A1.3.1. The FCMT will consist of a team chief that is a highly qualified 7-level supervisor and authorized to clear flight control system “Red X” discrepancies. The team chief will report directly to the impoundment official. FCMT members must possess a minimum of a 5-skill level and will be identified on Special Certification Roster.

A1.3.2. The FCMT will report directly to the impoundment official and consist of the following team members.

A1.4. A-10 FCMT.

A1.4.1. 2A3XX, A-10 Flight Control Maintenance Team Chief

A1.4.2. 2A3X3J, Tactical Aircraft Maintenance Technician.

A1.4.3. 2A3X3/2A3X3J, Tactical Aircraft Maintenance Technician with Repair and Reclamation experience.

A1.4.4. 2A3X1B, Guidance and Control System Technician.

A1.4.5. 2A6X6, Tactical Electrical and Environmental System Technician.

A1.5. F-16 FCMT.

A1.5.1. 2A3XX, F-16 Flight Control Maintenance Team Chief

A1.5.2. 2A3X2B, Integrated Avionics Technician.

A1.5.3. 2A3X3B, Tactical Aircraft Maintenance Technician.

A1.5.4. 2A6X6, Tactical Electrical and Environmental System Technician.

A1.5.5. A-10 personnel tasked to perform white area inspections will be identified on the SCR.

A1.5.6. When required, the team chief can request additional technicians. When the team chief requests additional personnel (not a team member), these team members need not be identified on the SCR as long as they work under the direct supervision of that team chief.

A1.5.7. AFETS and/or QA will be utilized to monitor, assist, and act as technical advisors on all flight control related impoundment.

A1.5.8. To ensure the integrity of maintenance actions, one FCMT per impounded aircraft will be dedicated to the malfunction for the duration of the impoundment. The FCMT will work on a single shift in order to maintain team continuity.

A1.5.9. The flight control maintenance team chief will ensure that the AFTO IMT 781A, Maintenance Discrepancy and Work Document and Abort/Investigation records are properly documented, reviewed by QA and filed with the AFTO IMT 781 series forms.

A1.5.10. If the flight control malfunction cannot be duplicated on the ground, a functional check flight may be performed pending approval from the MXG/OG commander. At a minimum, an OCF will be performed before returning the aircraft to normal flying operations. The OCF will simulate as closely as possible the conditions that generated the serious flight control malfunction.

A1.5.11. If the malfunction is not duplicated during the FCF/OCF, no further maintenance actions are required. If the original or another serious flight control malfunction occurs during the FCF/OCF, the aircraft will again be impounded.

Date

MEMORANDUM FOR 51 AMXS/MXAAS
51 AMXS/MXAA
51 AMXS/MXAB
51 MXS/MXMT
51 MXG/MXGQ

FROM: 51 AMXS/MXA

SUBJECT: Flight Control Maintenance Team (FCMT) Members

1. The following individuals are appointed as FCMT chief/members to troubleshoot and repair A/OA-10 aircraft that have serious or recurring flight control malfunctions. They are tracked in CAMS course code #547 (team member) and #548 (team chief).

25 AMU

RANK/NAME	EMP#	AFSC	DEROS	Position

2. The following individuals are appointed as FCMT chief/members to troubleshoot and repair F-16C/D aircraft that have serious or recurring flight control malfunctions. They are tracked in CAMS course code #684 (team member) and #685 (team chief).

36 AMU

RANK/NAME	EMP#	AFSC	DEROS	Position

3. This letter supersedes all previous letters. Asterisk denotes new entry.

SIGNATURE BLOCK
MOO/SUPT

Attachment 2

CALL SIGNS

51 FW Call Signs

Mustang 1	Wing CC
Mustang 1A	Wing CC EO
Mustang 2	Vice Wing CC
Mustang 3	Operations Grp CC
Mustang 3A	Deputy Ops Grp CC
Mustang 4	Support Grp CC
Mustang 4A	Deputy Support Grp CC
Mustang 6	Medical Grp CC
Mustang 6A	Deputy Medical Grp CC
Mustang 7	Command Post Director
Protocol 1	Protocol Office
Roundup Super	Command Post Superintendent
Roundup	Command Post
Roundup Alternate	Alt. Command Post
Roundup EA	CP Mobile EA Cell
Safety 1	Chief of Safety
Safety 2	Flight Safety
Safety 3	Ground Safety
Safety 4	Weapons Safety

25th Fighter Squadron

Draggin 1	25FS CC
Draggin OPS	Operations Desk
Tank Killer	25th OPS Driver

36th Fighter Squadron

Fiend 1	36 FS CC
Fiend Ops	OPS Desk
MIG Killer	36th OPS Driver

51st Maint Group

Mustang 5	
Mustang 5A	Deputy MG CC
MOC	Maintenance Operations Center
Alternate MOC	Alt. Maintenance Operations Center
Mobile MOC	Mobile MOC vehicle
MOC Super	MOC Superintendent

51 st AMXS

Fighter 1	
Fighter 2	AMXS A-10 Pro Super
Fighter 3	AMXS F-16 Pro Super
Fighter Chief	AMXS Chief
Fighter Lead	AMXS MOO
Weapons Chief	MG Weapons Manager
Weapons 1-3	MG Load Standardization
Fighter UCC	AMXS UCC
Fighter SCPS	AMXS SCPS

51st Maint Sq uadron

Max Lead	Maint Supervision OIC
Max 1	Maint. Squadron CC
Max 2	Maint. Supervisor
Max Chief	Maint Superintendent
Max Super	Production Superintendent
Max Super Alpha	Production Superintendent
Max Base	Unit Control Center

Accessory Flt

Ace 1	Flt. Chief
Ace 2-3	Egress Truck
Fuels Base	Fuels Base
Egress Base	Egress Base
Ace 4-5	Fuels Truck
Ace 6	Electro/Enviromental
Ace 7	Pneudraulics
Ace 8	Tank Farm

Avionics Flight

Cobra	Avionics Flight Commander
Cobra 1	Avionics Flight Chief
Cobra Base	Avionics Flight Office
Sensor 1-2	Sensors
Raven 1-2	EWS

TMDE Flight

CAL Base*	TMDE FCC
CAL 1-2	TMDE Vehicle

Fabrication Flt

Fab 1	Flight Chief
Fab Base	Fab Base
Fab 2-3	Structural Maintenance
Fab 4-5	Non-Destructive Inspection (NDI)
Fab 6	Metals Technology

Maintenance Flight

Transient Alert

Ramp Super	Ramp Supt., TA, DV Reception
TA Base	T/A Dispatch
Ramp 1-4	TA Follow-me/Maint
Recovery Chief	Maint. Flight Chief
Recovery 1-3	TA Crash/Recovery Response

Inspection Section

Falcon Phase	F-16 Phase Inspection Section
Thunder Phase	A-10 Phase Inspection Section

Aero Repair Section

A/R 1	Aero Repair Truck
A/R Base	Aero Repair Base

25th AMU

Thunder Lead	AMU OICr
Thunder Chief	AMU NCOIC
Thunder Super	Production Superintendent
Thunder Shadow*	Alt Production Super
Thunder 1	A Flight Expeditor
Thunder 2	B Flight Expeditor
Thunder 3	Specialist Expeditor
Thunder 4	Weapons Maint
Thunder 5	Weapons Load
Thunder 6	Sortie Generation Flight CC
Thunder 6A	Sortie Generation Flight Chief
Thunder 7	End of Runway (EOR) Super
Thunder Servicing	25th Servicing Crew
Thunder Engines	Engine Specialist
Thunder Debrief	Debrief Section
Thunder Dispatch	Maint. Dispatcher
Thunder Tow	Tow Crews
Thunder Turn*	Combat Turn Director
Thunder Rat*	OPS Ramp Rat
Thunder COSO	Support Section/Supply
Hog 1-8*	Area Supervisors
ATS 15-20	Area Turn Super 15-20
Rolling Thunder*	Mobile CTK

36th AMU

Falcon Lead	AMU OICr
Falcon Chief	AMU NCOIC
Falcon Super	Production Superintendent
Falcon Shadow*	Alt. Production Super
Falcon 1	A Flt. Expeditor
Falcon 2	B Flt. Expeditor
Falcon 3 / 3A	Specialist Expeditor
Falcon 4	Weapons Maint
Falcon 5	Weapons Load
Falcon 6	Sortie Generation Flt. CC
Falcon 6A	Sortie Generation Flt. Chief
Falcon 7	End of Runway (EOR) Super
Falcon Servicing	36th Servicing Crew
Falcon Engines	Engine Specialist
Falcon Debrief	Debrief Section
Falcon Dispatch	Dispatch Section
Falcon Tow 1&2	Tow Crews
Falcon Turn*	Combat Turn Director
Fiend Rat*	36th Ramp Rat
Falcon COSO	Supply/COSO personnel
Falcon Support	Support Section
Red 1-4*	Area Supers
ATS 21-24*	Area Turn Supervisors
Jammer 1&2*	ECM Pod Reprogrammers
Last Look 1&2*	Last Look Teams

51 MXG QA

QA/EET Lead	QA Supervision
QA Base	Quality Assurance
Thunder QA	QA- A-10s
Falcon QA	QA- F-16s
MXS QA	QA- MXS
FOD 1	51 FW FOD NCO

GE Flight

Tango 1	TaAGE Chief
Tango Super	Production Superintendent
Tango Lead	CAT Leader
Tango Base	AGE FCC
Tango Bongo	AGE Runner
Tango 25/25A	25FS CAT Driver
Tango 36/36A/36B	36FS CAT Driver
Tango 51/51A/51B	51 FW CAT Driver

Propulsion Flt

Pacer 1	Propulsion Flight Chief
Pacer 2	JEIM
Pacer 3	Test Cell
Pacer Base	Support

POL

Dog House	Fuels Control Center
Dog Pound	Maintenance
Rover 4 & 5	Expeditors
Dog 1	Fuels Management Officer
Dog 2	Fuels Management Supt.
Dog 3	Operations Supt.
Dog Catcher	QC Inspection NCOIC
Pitbull	Hot pit flow thrus
Underdog	Hydrants
Pointer	Lab
Huskies	LOX
Chuckwagon	Storage yard
Chuckwagon 1	Mobile Storage

51 Munitions Squadron

MUNS 1	Commander
Arm Super	Armament Maintenance Super
Arm 1	Armament Systems Flight Chief
Arm 2	36FS CAST
Arm 3	25 FS CAST
AMMO 1	Operations Officer
AMMO 1A	Asst. Operations Officer
AMMO Chief	Munitions Squadron Superintendent
AMMO Control	Munitions Control
AMMO 2	Production Flight Chief
AMMO 3	Material Flight Chief
AMMO 4	Systems Flight Chief
AMMO 5	Control Vehicle
Condor	Trailer Maintenance
Phoenix	Munitions Inspection
Cobra	Trailer Maintenance
Thunder EX	25FS Line Expeditor
Falcon EX	36FS Line Expeditor
Shadow 1	Alternate Control
Shadow 2	Tertiary Control
Stacker 1	NCOIC Storage
Stacker 2-52	Storage
Bullet 1	NCOIC Line Delivery
Bullet 2-22	Line Delivery
Maverick 1	NCOIC Missiles
Maverick 2-3	Missiles
Maverick 4	Vacant
Reaper 1	NCOIC Preload
Reaper 2-24	Preload
Bear 1	NCOIC Conventional Maint.
Bear 2-4	Conventional Maint.
Badger 1	NCOIC Equip. Maint.
Badger 2-8	Equipment Maint.
Hawk 1	NCOIC Munitions Ops
Hawk 2-4	Munitions Ops Crews
Cougar 1	NCOIC Alpha Storage
Cougar 2-25	Alpha Storage

51st Transportation Sq.

Trans 1	Transportation Commander
Ops 1	Flight Commander
Ops 2	Flight Supt.
Ops 3-40	Vehicle Operators
Dispatch	Vehicle Dispatch
Trans Control	Reception/Deployment Trans Cont
Transco 1-2	Receptions/Deployment Rep.
VMCC	Vehicle Maint. Cont. Center
Mobile	Mobile Maint.

Travel Management

CDF	Cargo Deployment Function NCOIC
CDF 1-10	Marshalling Load teams
TCU	Trans Control Unit NCOIC
Trans UCC	Unit Control Center
PDF NCOIC	Passenger Deployment Function
PDF 1-5	Baggage Team

Attachment 3

MANUAL JOB CONTROL NUMBERS (JCNS)

SECTION/ACTIVITY	ASSIGNED JCNS
Maintenance Operations Center	5000-5049
Cannibalizations	5050-5099
Aircraft Accident/Incident	123A-123Z
Special Reports	12AA-12AZ
51st Maintenance Group	
Weapons Standardization	5100-5199
Quality Assurance	5200-5299
Quality Assurance	7900-7949
51st Maintenance Operations Squadron	
Plans & Scheduling Time Change	5300-5399
Plans & Scheduling TCTO	5400-5499
Engine Management	7950-7999
Reserved for Future Use	5500-5799
Det 1, 33rd Rescue Squadron	
On-Equipment Maintenance	7700-7799
Off-Equipment Maintenance	7800-7899
25 AMU	
Specialist Section	5800-5899
Weapons Section	5900-5999
Dispatch	6000-6099
Debriefing	6100-6199
Debriefing (Deployed)	D500-599
Plans & Scheduling	6200-6299
Support	6300-6399
Aircraft Serial Number	
78-0685	6400-6409
79-0183	6410-6419

SECTION/ACTIVITY	ASSIGNED JCNS
79-0185	6630-6639
79-9211	6670-6679
80-0153	6610-6619
80-0163	6420-6429
80-0164	6430-6439
80-0165	6440-6449
80-0177	6450-6459
80-0192	6640-6649
80-0217	6650-6659
80-0213	6460-6469
80-0224	6470-6479
80-0239	6480-6489
80-0241	6490-6499
80-0243	6500-6509
80-0244	6510-6519
80-0245	6520-6259
80-0247	6530-6539
80-0251	6540-6549
80-0253	6550-6559
80-0283	6560-6569
81-0959	6660-6669
81-0971	6680-6699
81-973	6580-6589
82-0651	6590-6599
82-0652	6600-6609
400 Hour Phase #1	A001-A999
800 Hour Phase #2	B001-B999

36 AMU

Specialist Section	6700-6799
Weapons Section	6800-6899
Dispatch	6900-6999
Debriefing	7000-7099
Debriefing (Deployed)	D600-D699
Plans & Scheduling	7200-7299

SECTION/ACTIVITY	ASSIGNED JCNS
Support Section	7200-7299
Aircraft Serial Number	
88-0440	7300-7309
88-0494	7310-7319
88-0513	7500-7509
88-0531	7330-7339
88-0536	7340-7349
88-0538	7350-7359
88-0540	7360-7369
88-0547	7370-7379
89-2014	7380-7389
89-2020	7390-7399
89-2033	7400-7409
89-2043	7410-7419
89-2052	7420-7429
89-2080	7430-7439
89-2122	7440-7449
89-2130	7450-7459
89-2133	7460-7469
89-2136	7470-7479
89-2139	7480-7489
89-2140	7590-7599
90-0710	7600-7609
90-0743	7610-7619
90-0771	7620-7629
90-0774	7630-7639
90-0775	7640-7649
90-0779(D)	7650-7659
90-0780(D)	7660-7669
Reserved for Future Use	7670-7699
400 Hour Phase #1	A001-A999
800 Hour Phase #2	B001-B999

SECTION/ACTIVITY	ASSIGNED JCNS
51st Maintenance Squadron	
AIS	8000-8099
TMDE Type II	8100-8199
TMDE Type IV	8200-8299
Sensor	8300-8399
ECM	8400-8499
Auto Test Station	8500-8549
Propulsion (JEIM)	8550-8599
Propulsion (Test Cell)	8600-8649
Fuels	8650-8699
Egress	8700-8749
Wheel & Tire	8750-8799
TAC Electro/Environmental	8800-8849
Pneudraulics	8850-8949
Age (Non-Powered)	8950-8999
Age (Powered)	9000-9099
Transient Maintenance	T400-T599
NDI	9100-9149
Metal Processing	9150-9199
Structural Repair	9200-9249
Survival	9250-9299
51st Munitions Squadron	
Armament Systems (25 CAST)	9300-9349
Armament Systems (36 CAST)	9350-9449
Reserved For Future Use	9450-9999

Attachment 4

STANDARDIZED JACKET FILE PLAN

All aircraft jacket files will be maintained in accordion folders in the following order:

Section 1 – AF IMT 2411, **Inspection Document**

Section 2 – AFTO IMT 781
(Jan/May/Sep)

Section 3 – AFTO IMT 781
(Feb/Jun/Oct)

Section 4 – AFTO IMT 781
(Mar/Jul/Nov)

Section 5 – AFTO IMT 781
(Apr/Aug/Dec)

Section 6 –51 FW IMT 28,
Aircraft Records Check (Last Completed)

Section 7 – Aircraft AFTO IMT 95's

Section 8 – Aircraft Component AFTO IMT 95's

Section 9 – Armament AFTO IMT 95's

Section 10 – Fuel Records (AFTO IMT 95's)

Section 11 – #1 Engine Records

Section 12 – #2 Engine RecordsSection
(If Required)

Section 13 – Ejection Seat AFTO IMT 95's

Section 14 – Phase Package
(Last Completed & Previous)

Section 15 – CAMS Product –
PRA (Inspections)

Section 16 – CAMS Product – PRA (Time Change)

Section 17 – TCTO Records

Section 18 – FCF/OCF Packages

Section 19 – Transfer Records
(AF IMT 2692)

Section 20 – Weight & Balance
Records

Section 21 – JOAP Records/ASIP

Section 22 – CAMS Product TRE (Xfer Report)

Section 23 – CAMS Product TRE (Xfer Report)

Section 24 – CAMS Product SHD
(Xfer Report)

Section 25 – Depot Maintenance Package

Section 26 – AF IMT 103, **Base Civil Engineering Work Clearance Rquest**

27 – Survival Equip
AFTO IMT 338, **Survival Kit Record** & 392, **Parachute Repack, Inspection and Component Record (LRA)**

Section 28 – Lost Tool / Impound Reports

Section 29 – Last 10
Debriefs/ PRDs (Xfer Only)

Section 30 – Miscellaneous Records

Section 31 – AF Form 614, **Charge out Record**

Attachment 5

MISSING FORMS EXAMPLE LETTER

MEMORANDUM FOR 51 AMXS/ MXAA DATE:

FROM: 51 AMXS/ MXAAP

SUBJECT: MISSING AFTO IMT 781 FORMS

ACFT _____ MISSING AFTO IMT 781 SERIES

FROM _____ (TO) _____ PLEASE PERFORM A THOROUGH SEARCH FOR

THE MISSING FORMS. WHEN FORMS ARE LOCATED RETURN THIS LETTER

AND THE MISSING FORMS TO PS&D. IF AFTO IMT 781'S ARE NOT LOCATED PLEASE

RETURN LETTER SIGNED BY THE APG FLIGHT CHIEF.

REPLY IS REQUIRED WITHIN 5 WORKDAYS!!

1st NOTICE DATE : _____ SENT TO SECTION CHIEF'S
2nd NOTICE DATE:_____. SENT TO THE AMU OIC/NCOIC_

COMMENTS: _RETURN TO PLANS AND SCHEDULING

PS&D SIGNATURE _____

1ST Ind, 25 FS/MAG

MISSING FORMS WERE LOCATED/ CERTIFIED **LOST** OR **FOUND** ON:
APG SECTION CHIEF SIGNATURE:
_____

(IF LOST) ALSO NEED AMU OIC/NCOIC SIGNATURE: _____

IF SURPASSED 2nd NOTICE
NEED AMU OIC/NCOIC SIGNATURE: _____

Attachment 6

OSAN AB SORTIE SEQUENCE LINE NUMBERS

The following is the sortie sequence line numbers applicable to all flying units at Osan:

001 – 025	55 Airlift Normal Lines
026 – 030	36 FS FCF/OCF Lines
031 – 050	36 FS Deployment Lines (To & From Osan)
051 – 075	36 FS Cross-Country lines (Sorties that originate at a base other than Osan)
076 – 100	36 FS Alert Lines
101 – 200	36 FS Deployment Lines (Sorties flown in support of off station deployment)
201 – 275	36FS Normal lines
276 – 300	36 FS Add Lines (HHQ & Other)
301 – 400	36 FS Exercise Lines (Day 1/3/5 etc.)
401 – 500	36 FS Exercise Lines (Day 2/4/6 etc.)
501 – 550	25 FS Alert Lines
551 – 600	25 FS Deployment Lines (To & From Osan)
601 – 675	25 FS Normal Lines
676 – 700	25 FS Add Lines (HHQ & Other)
701 – 800	25 FS Exercise Lines (Day 1/3/5 etc.)
801 – 900	25 FS Exercise Lines (Day 2/4/6 etc.)
901 – 910	25 FS FCF/OCF Lines
911 – 940	25 FS Cross-Country Lines (Sorties that originate at a base other than Osan)
941 – 999	Units deployed to Osan

Attachment 7

FOD RESPONSIBILITY AREAS

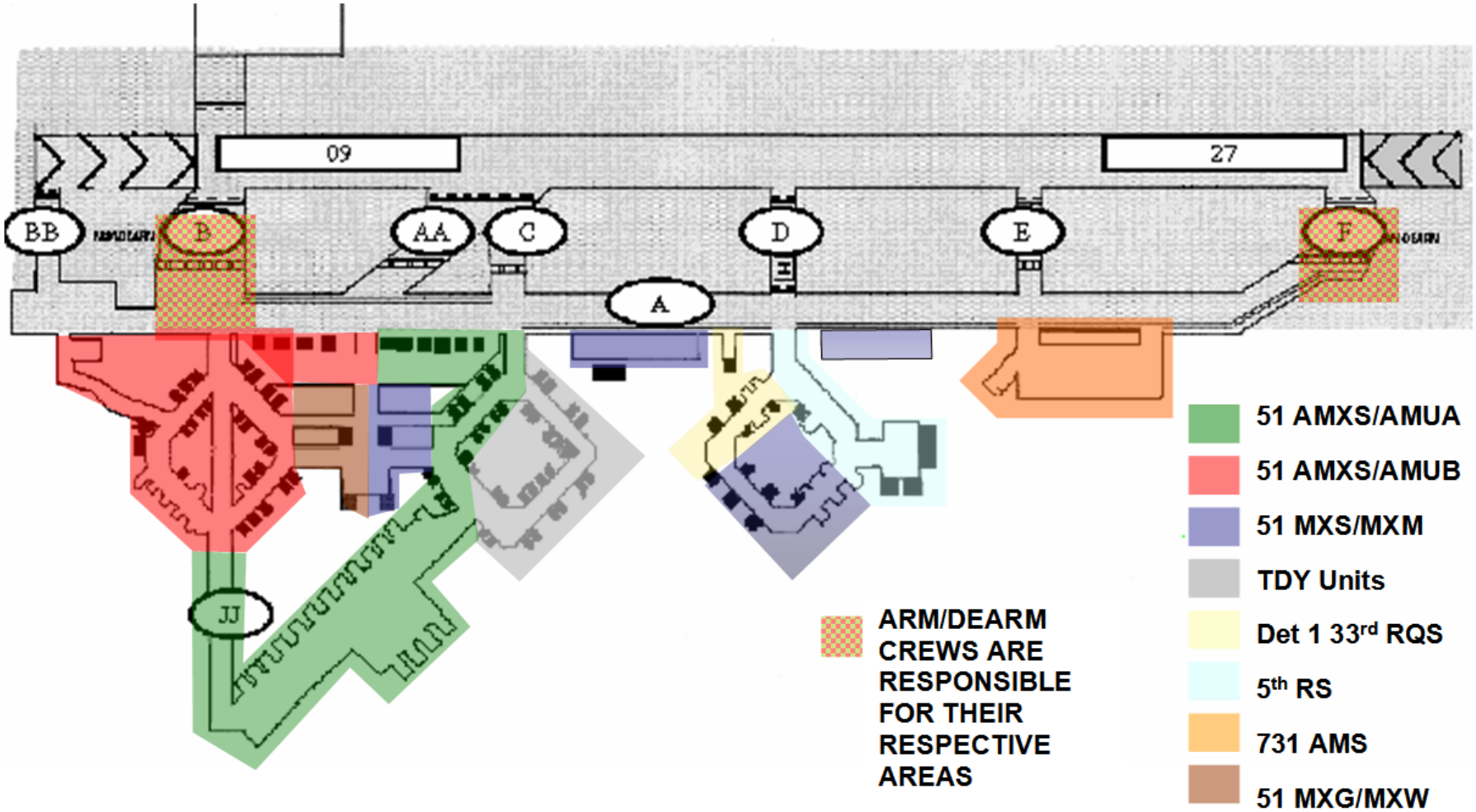

Attachment 8

RWR/RTHW LOCATIONS

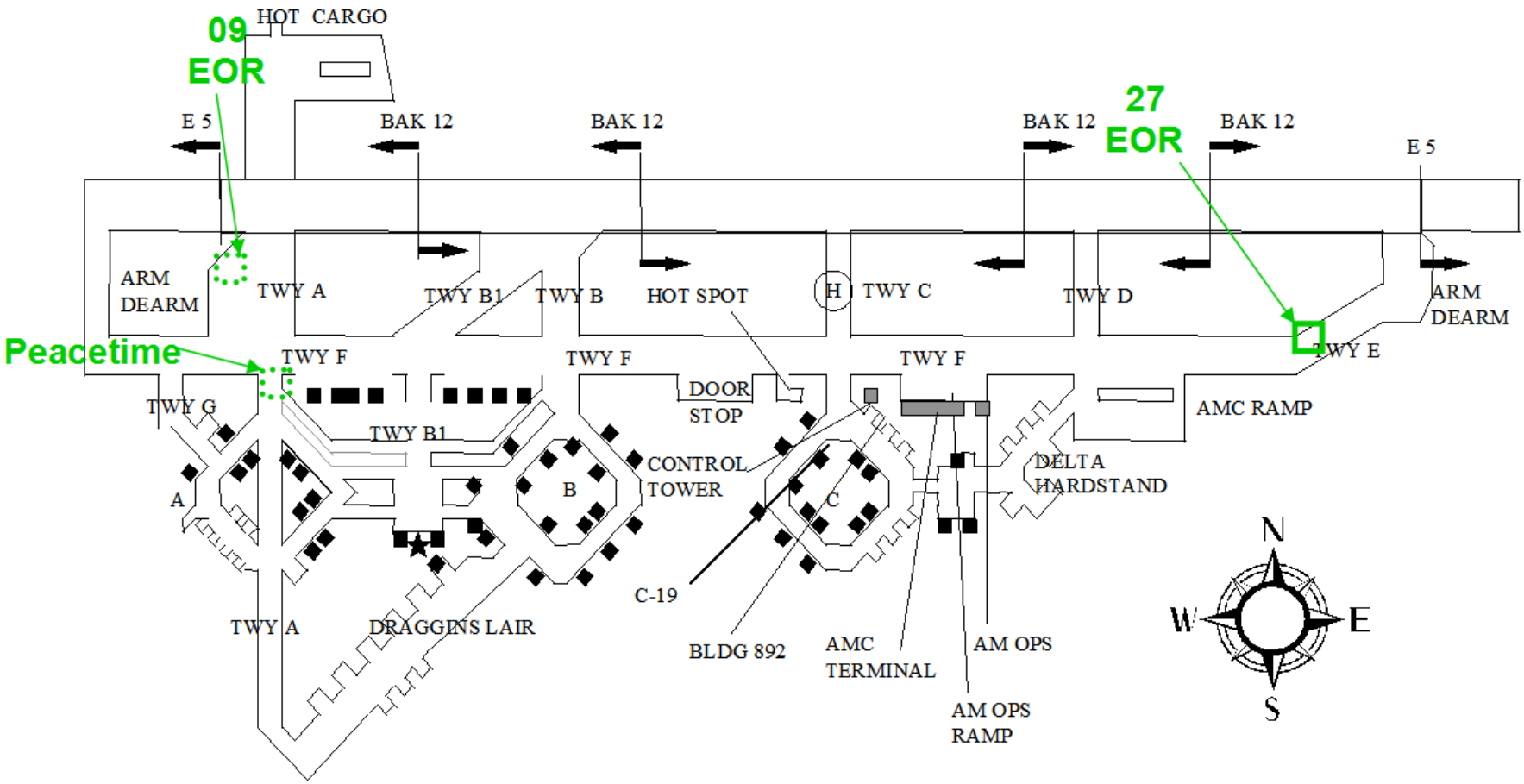

DETAIL OF 27 EOR RWR/RTHW LOCATION

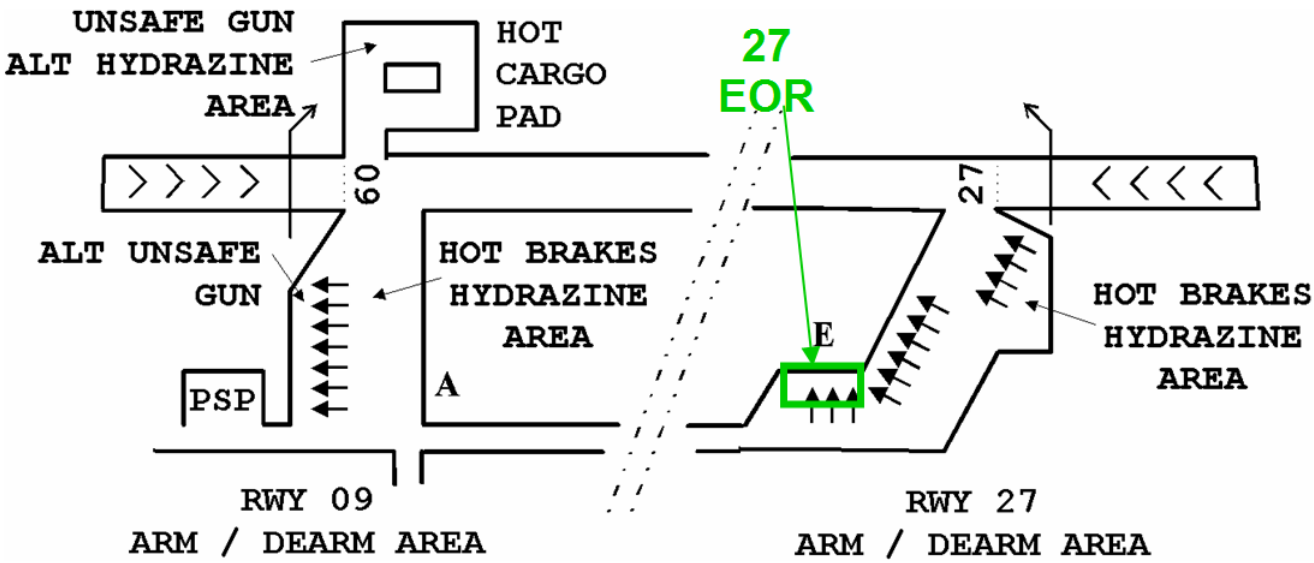

Attachment 9

FOD PREVENTION COMMITTEE MEETING STRUCTURE

THE FOD COMMITTEE WILL BE COMPOSED OF INDIVIDUALS FROM THE FOLLOWING POSITIONS OR THEIR DESIGNATED REPRESENTATIVE.

SENIOR COMMITTEE:

51 FW/CV (Vice Wing Commander)

51 OG/CC (Ops Group Commander)

51 MXG/CC (Maint Group Commander)

51 MSG/CC

51 MXS/CC/LGM

51 OSS/CC/OSAM

51 MOS/CC

51 MUNS/CC

51 AMXS/CC/MXAA/MXAB

51 SFS/CC/SFO

51 FW/SE

51 CES/CC

51 LRS/CC/LGRF

DET 1, 33RD RQS/MA

731 AMS/DO

5 RS FOD OFFICER/NCO

JUNIOR COMMITTEE:

51 FW/CVFOD CHAIRPERSON

Representatives, normally in the grade of SSgt and below, from:

51AMXS/MXAA (*25 AMU*)

51 AMXS/MXAB *(36 AMU*)

51 OSS/OSAM

51 CES/CEF*(FIRE DEPT*) CEORH*(HORIZONTAL REPAIR*) CEOIP*(BARRIER MAINT*)

51 MXS/MXMCE(*E&E*), MXMCF(*FUELS*), MXMCG(*EGRESS*), MXMCP(*PNEU*), MXMD(*TMDE*), MXMFN(*NDI*), MXMFS(*S/M*), MXMG(*AGE*), MXMP(*PROPS,* MXMTP*(PHASE*)

MXMTT(*T/A*) MXMV*(AVIONICS)* MXMVS*(SENSORS)*

51 MUNS/MXWKL(*LINE D*), MXWR(*ARMAMENT*)

51 SFS/SFOS (*SP*)

51 LRS/LGRFIR(*POL*), LGRFO(*POL OPS*), LGRVO(*VEHICLE OPS*), LGRMA(*FLHT LINE PARTS*), LGRMF(*FLT SERVICE CENTER*)

5 RS/MAQ(*BLACK CAT*)

DET 1, 33 RQS/MAG(*RESCUE*)

731 AMS/SE(*SAFETY*)

55 ALF(*C-12*)

51 MOS/MXQ/MXOT(*QA/MAT*)

NOTE: All members will be appointed by letter to the 51st Fighter Wing FOD NCO. Letters should include rank, name, duty phone, office symbol, and DEROS. Both Senior and Junior committee members can go on one letter if applicable.

JOSEPH REYNES, JR., Brigadier General,
USAF Commander