AIR FORCE HANDBOOK 10-222, VOLUME 5
1 JULY 2008
Incorporating Change 1, 15 September 2008

# GUIDE TO CONTINGENCY ELECTRICAL POWER SYSTEM INSTALLATION

DEPARTMENT OF THE AIR FORCE

***BY ORDER OF THE SECRETARY OF THE AIR FORCE***

***AIR FORCE HANDBOOK 10-222, VOLUME 5***
***1 July 2008***
Incorporating Change 1, 15 September 2008

***Operations***

# *GUIDE TO CONTINGENCY ELECTRICAL POWER SYSTEM INSTALLATION*

**ACCESSIBILITY**: Publications and forms are available on the e-Publishing website at **www.e-publishing.af.mil** for downloading or ordering.

**RELEASABILITY**: No releasability restrictions on this publication.

OPR: HQ AFCESA/CEXX
Supersedes AFH 10-222V5, 1 October 1998; AFH 10-222V10, 1 May 2000

Certified by: HQ USAF/A7CX (Col Donald L. Gleason)
Pages: 142

This handbook addresses actions necessary to install contingency electrical generation and distribution systems equipment found in the Basic Expeditionary Airfield Resources (BEAR) equipment sets, including legacy systems that may have been transitioned into the BEAR program to support austere base force deployments. This handbook applies to Electrical Systems and Electrical Power Production technicians charged with providing power generation and electrical distribution systems support for contingency beddowns, including Air National Guard (ANG) units and Air Force Reserve Command (AFRC). Readiness and deployment planners and base level mobility team chiefs responsible for contingency planning should also use it for information regarding siting issues and requirements. This guide may also be used in support of peacetime contingencies. The electrical and power production technicians using this handbook should have a basic knowledge of electrical components of the contingency systems. At least one craftsman in each specialty will be task certified for directing and meeting the installation,

operation, and maintenance requirements for the applicable components of the system. Other users of this handbook should be familiar with basic contingency electrical components. Guidance in this handbook is based on the references listed in Attachment 1. Refer recommended changes and questions about this publication to the Office of Primary Responsibility (OPR) using AF IMT 847, *Recommendation for Change of Publication*; route AF IMT 847s from the field through Major Command (MAJCOM) publications/forms managers. Ensure that all records created as a result of processes prescribed in this publication are maintained in accordance with AFMAN 37-123 (will convert to AFMAN 33-363), *Management of Records*, and disposed of in accordance with the Air Force Records Disposition Schedule (RDS) located at https://afrims.amc.af.mil/. The use of the name or mark of any specific manufacturer, commercial product, commodity, or service in this publication does not imply endorsement by the Air Force.

## *SUMMARY OF CHANGES*

This publication has been substantially revised and must be completely reviewed. This version consolidates and supersedes AFH 10-222 Volumes 5 and 10 and implements BEAR as the sole Air Force contingency electrical system superseding legacy Harvest Falcon and Harvest Eagle systems. The remaining Falcon and Eagle components will transition into the BEAR systems and will therefore also be described in this revision. The great majority of system components are installed identically with the exception of the primary distribution and switching centers. Major changes include: consolidating the contingency power plant with the electrical distribution system. It adds the BEAR components of the Deployable Power Generation and Distribution System, the Primary Switch Center (PSC) being the biggest change.

Change 1 corrects the discrepancies in paragraph 5.10.2 and Figure 5.26 by emphasizing that proper personal protective equipment must be worn when disconnecting energized arc strangler switches. It also adds Chapter 6, *Information Collection, Records, and Forms*. A margin bar (|) indicates newly revised material

**Chapter 1 – INTRODUCTION** **9**
1.1. Contingency Electrical System Overview ..... 9
1.2. Deployment Packages ..... 10
Figure 1.1. Force Module Construct …….. 10
Table 1.1. BEAR Electrical Equipment by UTC ..... 12
**Chapter 2 – MAJOR SYSTEM COMPONENTS** **13**
2.1. Deployable Power Generation and Distribution System (DPGDS) ..... 13
Figure 2.1. MEP-12A Generator ..... 13
Figure 2.2. Primary Switch Center (PSC) ..... 15
Figure 2.3. Secondary Distribution Center (SDC), Low-Voltage Side ..... 17
Figure 2.4. Power Distribution Panels (PDP) ..... 18
Figure 2.5. RALS Container and Light Poles ..... 19
Figure 2.6. Tactical Quiet Generators ..... 19
Figure 2.7. Cable Reel Pallet Assembly (CRPA) ..... 20
2.2. Legacy Equipment ..... 21
Figure 2.8. MEP-005 Generator ..... 21
Figure 2.9. MEP-006 Generator ..... 21
Figure 2.10. MEP-007 Generator ..... 22
Figure 2.11. Primary Distribution Center ..... 23
Figure 2.12. Load Break Elbow (secured with Grip-All clamp stick) . 23
Figure 2.13. Secondary Distribution Center ..... 24
Figure 2.14. Mission Essential Generator Connected to SDC ..... 25
Figure 2.15. Low-Voltage Cables with Cannon Plug Connections ..... 25
Figure 2.16. Typical Power Distribution Panels ..... 26
Figure 2.17. Equipment Rack with Generator Control Panels ..... 27
Figure 2.18. Typical (22x22) Fuel Bladder ..... 28
Figure 2.19. Fuel Manifold ..... 28

2.3. System Composition ..... 29
Figure 2.20. Basic Electrical Distribution System Schematic ..... 30
**Chapter 3 – SITE PLANNING AND LAYOUT** **31**
3.1. Siting ..... 31
Figure 3.1. Dispersal Patterns for 3-, 6-, 9-, and 12-Facility Groupings ..... 32
Figure 3.2. SDC Placement for Non-Dispersed 24-Facility Grouping ..... 32
Figure 3.3. Insufficient No. of SDCs for Dispersed 24-Facility Grouping ..... 33
Figure 3.4. Five SDCs Supporting Dispersed 24-Facility Grouping ..... 33
3.2. Site Planning ..... 34
3.3. Layout ..... 39
Figure 3.5. Linear Base Layout ..... 39
Figure 3.6. 1,100-Person Radial Electrical Distribution System ..... 40
Figure 3.7. Conventional Type Base Layout ..... 40
Figure 3.8. 1,100-Person Looped Electrical Distribution System .... 41
Figure 3.9. 1,100-Person Interconnected Electrical Distribution System ..... 42
Figure 3.10. Critical Facility SDCs Connected By Parked Cables ..... 42
Table 3.1. 1,100-Person Facility List ..... 43
Table 3.2. 3,300-Person Facility List ..... 44
Table 3.3. General Separation Distances for Facilities in Groups .... 45
Figure 3.11. Typical 1,100-Person Layout with Major Roadway Grid ..... 47
Figure 3.12. Typical Growth from 1,100- to 3,300-Person Layout .... 48
3.4. Electrical Planning ..... 49
Table 3.4. Typical Harvest Falcon Demand Factors ..... 50
Table 3.5. Typical Harvest Falcon Electrical Planning Factors ..... 51

Table 3.6. Example Wing Ops Group Secondary Distribution Schedule ..... 55
Table 3.7. Example Wing Operations Group SDC Feeder Schedule ..... 57
Figure 3.13. Example SDC Circuit for Wing Operations Group ..... 59
Figure 3.14. Typical Connection between Two PDCs ..... 61
Figure 3.15. Parked Cables between Two SDCs on Different Circuits ..... 62
Figure 3.16. Rerouting Cables to Prevent PDC Overloading ..... 63
**Chapter 4 – INSTALLATION** **65**
4.1. Safety Summary ..... 65
4.2. Personnel Responsibilities ..... 67
Table 4.1. Task Responsibilities ..... 68
4.3. Grounding ..... 68
Figure 4.1. Typical Equipment Horizontal Ground Rod Installation . 69
Figure 4.2. Typical Equipment Laced Wire Grounding Installation .. 70
Figure 4.3. Typical Equipment Grounding Grid Platform Installation 70
4.4. DPDGS High-Voltage Component Installation ..... 71
Figure 4.4. SDC Ground Rod Assembly ..... 72
Figure 4.5. Grounding Location on the SDC ..... 73
4.5. HARVEST Series High-Voltage Component Installation . 73
4.6. Laying Out High-Voltage Cable ..... 74
Figure 4.6. Primary Cable Cross-section ..... 74
4.7. Trenching ..... 75
Figure 4.7. Tractor with Backhoe, Blade, and Trenching Wheel ..... 76
Figure 4.8. Trench and Cable Detail ..... 77
Figure 4.9. Multiple Cable Runs in Common Trench ..... 78
4.8. Fabrication for Load Break Elbows ..... 78
4.9. Cable Connections from Generators to PSC/PDC ..... 78

Figure 4.10. Feeder Circuits Labeled …….. 79
4.10. Connections from SDCs to PSC/PDC ..... 80
Figure 4.11. Detail of Electric Fusible Disconnect (EFD) ..... 81
Figure 4.12. Disconnecting EFD Center Pole with a Switch Stick ..... 81
Figure 4.13. SDC Input Ground Connection ..... 82
Figure 4.14. Cables Connected to Input Bushings ..... 83
Figure 4.15. SDC Input and Output Cables ..... 84
Figure 4.16. Branch Connected SDCs with a MEP-12A Generator ... 85
4.11. Connections from SDCs to PDPs and Service Panels .... 85
Figure 4.17. Connection from SDC to Small Shelter System PDP .... 86
Figure 4.18. Cannon Plug Connection from SDC to ESC Service Panel ..... 86
Figure 4.19. Cannon Plug Connection from PDP to ECU ..... 87
4.12. Mission Essential Power (MEP) ..... 88
Figure 4.20. SDC Secondary Connection Panel and Circuit Breakers ..... 89
**Chapter 5 – POWER PLANT LAYOUT** **91**
5.1. Introduction ..... 91
5.2. Site Selection ..... 91
5.3. Equipment Layout ..... 93
Figure 5.1. Two Unit Plant w/PSC Configuration ..... 94
Figure 5.2. Three-Unit Plant w/PSC Configuration ..... 94
Figure 5.3. Four-Unit Plant w/PSC Configuration ..... 95
Figure 5.4. Four-Unit Plant w/PDC Configuration ..... 96
Figure 5.5. General Plant Configurations w/PDCs by Population ..... 96
5.4. Generator Installation ..... 97
Figure 5.6. Generators Positioned w/Radiators Downwind ..... 97
Figure 5.7. Ground Stud on MEP-12A Generator ..... 98
5.5. Establish Fuel Storage Manifold System ..... 98

Figure 5.8. 20,000-Gallon Fuel Bladder Assembly ..... 99
Figure 5.9. DPGDS External Fuel Supply Layout ..... 100
Figure 5.10. Fuel Hose Connected to MEP-12A ..... 100
Figure 5.11. Manifold Assembly ..... 101
Figure 5.12. Typical Fuel Bladder Placement ..... 102
Figure 5.13. Bladder and Berm Detail ..... 104
5.6. PSC Installation ..... 105
5.7. PDC Installation ..... 105
Figure 5.14. PDC Site Requirements ..... 106
Figure 5.15. Typical PDC Clearances ..... 107
Figure 5.16. Placement of PDC near Generators ..... 107
Figure 5.17. Grounding Locations on the PDC ..... 108
5.8. Cable Connections ..... 108
Figure 5.18. Power Panel Box ..... 110
Figure 5.19. Connecting Cables to MEP-12A with Grip-All Clamp Stick ..... 111
Figure 5.20. Grounding Brackets ..... 112
Figure 5.21. PDC Cable Approach Plan ..... 113
Figure 5.22. Ground Stud at Input Connection ..... 114
Figure 5.23. PDC Line Side Connection ..... 115
Figure 5.24. PDC Output Feeder Connection ..... 115
Figure 5.25. Arc Strangler Switches Removed from Unused Feeder . 116
5.9. PDC Installation Checkout ..... 116
Table 5.1. PDC Installation Checkout ..... 117
5.10. Energized PDC Emergency Disconnect ..... 117
Figure 5.26. Disconnecting the Arc Strangler Switches ..... 118
Figure 5.26a. Disconnecting Phase B Arc Strangler Switch ……. 119
5.11. Remote Generator Operation ..... 119

Figure 5.27. MEP-12A Control Panel ..... 119
Figure 5.28. Power Plant Control Room (ESC) ..... 120
Figure 5.29. Control Cables ..... 120
Figure 5.30. Control Cable Connected at MEP-12A ..... 121
5.12. Connections Between Plants ..... 121
5.13. Remote Area Lighting System (RALS) ..... 121
5.14. Contingency Electrical System Checklist ..... 122
5.15. Prescribed and Adopted Forms ..... 122
**Chapter 6 – INFORMATION COLLECTION, RECORDS, AND FORMS 123**
6.1. Information Collections ……. 123
6.2. Records …….. 123
**Attachment 1— GLOSSARY OF REFERENCES AND SUPPORTING INFORMATION 124**
**Attachment 2—LOAD BREAK ELBOW GENERAL ASSEMBLY INSTRUCTIONS 127**
**Attachment 3—CONTINGENCY ELECTRICAL SYSTEM INSTALLATION CHECKLIST 141**

# Chapter 1

# INTRODUCTION

**1.1. Contingency Electrical System Overview.** The contingency electrical system is composed of three major components: generation, high-voltage primary (4,160-volt) distribution, and low-voltage secondary (120/208-volt) distribution. The equipment as described in this handbook must be installed, operated, and maintained by qualified persons who are knowledgeable in the installation, operation, and maintenance of electric power generation and distribution equipment and their associated hazards.

**Note:** Electricians and maintenance personnel shall wear appropriate personal protective equipment (PPE), to include arc thermal performance value (ATPV) rated PPE, in accordance with **AFI 32-1064**, *Electrical Safe Practices*, and **UFC 3-560-01**, *Electrical Safety, O&M*, prior to working on or near energized electrical equipment or circuits. BCE or commander approval is needed prior to working on any energized circuits.

1.1.1. Within the major components are subcomponents such as generators, primary cable reels and pallets, secondary distribution centers (SDCs), primary distribution centers (PDCs), primary switch centers (PSC), remote area lighting system (RALS), secondary cable assemblies, power distribution panels, and mission essential power (MEP) cable assemblies.

1.1.2. Contingency electrical systems arrive at the beddown site in air transportable deployment packages consisting of tents or small shelter systems (SSS); medium-type shelters that could include frame supported tension fabric shelters (FSTFS), dome shelters, or medium shelter systems (MSS); hardwall shelters; expandable shelter containers (ESC); equipment; and utility systems and components. These deployment packages are Force Module enablers necessary to open and operate any austere airbase across the spectrum of Air and Space Expeditionary Force (AEF) operations. In addition, these packages may be used for other contingencies such as humanitarian operations.

**1.2. Deployment Packages.** Deployment packages have transitioned from the legacy Harvest series to the Basic Expeditionary Airfield Resources (BEAR) program. Force Modules are building blocks for BEAR capabilities (**Figure 1.1**). They focus on the number of austere airfields required to support the spectrum of operations in place of the previous concept that was based on number of troops and aircraft supported. Buildup of the airbase using newly configured BEAR Force Module Unit Type Codes (UTCs) ensures the airbase is ready to receive the forces and generate the mission. BEAR, as a component of Agile Combat Support (ACS), enables the Air Force to deploy and sustain AEFs at austere locations. In simple terms**,** BEAR provides vital equipment, facilities and supplies necessary to beddown and support combat forces at expeditionary airbases with limited infrastructure and support facilities. As a minimum, the beddown location must have a runway and parking ramp suitable for the type of aircraft deployed and a source of water that can be made potable.

**Figure 1.1. Force Module Construct.**

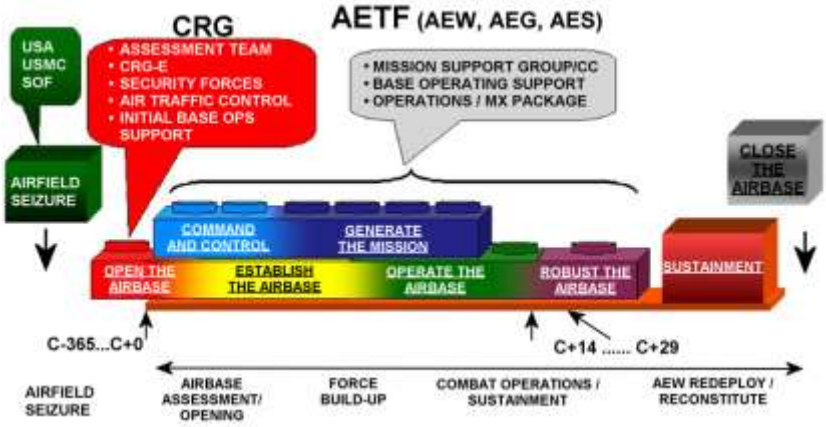


1.2.1. The primary mission of BEAR is to provide expeditionary basing assets for use at austere airfields, thereby providing the AEF with global basing capability. BEAR is included in the Force Modules that open, establish

and operate the base. BEAR supports the full range of Department of Defense (DOD) missions within our National Military Strategy (NMS).

1.2.2. BEAR equipment is made up of seven equipment component sub-systems; shelters, environmental control, power, waste/water, hygiene, feeding, and airfield support. These sub-systems are contained in BEAR sub-sets which include BEAR 150 (B-150) sets, BEAR 550 Initial Housekeeping (B-550i) sets, BEAR 550 Follow-on Housekeeping (B-550f) sets, BEAR Industrial Operations (B-IO) sets, BEAR Initial Flightline (B-IF) sets, and BEAR Flightline Follow-on (B-FF) sets.

1.2.3. Legacy systems include Harvest Eagle (HE) and Harvest Falcon (HF) assets.

1.2.3.1. HE sets were air-transportable packages of housekeeping equipment, spare parts and supplies required to support up to 550 personnel in bare-base conditions. Typical equipment included billeting tents, kitchens, showers, latrines, and power and water systems. Tailored 550 (T-550) sets were modified HE sets providing similar housekeeping capabilities in the PACAF area of responsibility (AOR).

1.2.3.2. HF housekeeping sets were air-transportable packages of equipment, spare parts and supplies needed to support up to 1100 personnel in bare base conditions, principally in the CENTAF AOR. As in HE, typical equipment included billeting tents, kitchens, showers, latrines, and power and water systems. Air conditioners were also included for environmental control. HF also included industrial operations (IOP) and initial and follow-on flightline (IF and FF) support sets of hard wall shelters, tents, and related civil engineering and logistics equipment needed to maintain a bare base and support flight operations and maintenance.

1.2.4. BEAR systems employ essentially the same equipment as the legacy sets did, but configured to better support AF force modules and AETF operations. Legacy sets are being reconfigured to BEAR sets as the BEAR system matures. See AFH 10-222V2, *Guide to Bare Base Assets,* for a complete

description of current Unit Type Codes. **Table 1.1** lists the electrical equipment contained in the BEAR UTCs.

**Table 1.1. BEAR Electrical Equipment by UTC.**

| | B-150 | B-550i | B-550f | B-FI | B-FF | B-IO | Playbook Options |
|---|---|---|---|---|---|---|---|
| **MEP-12A** | | 2 | 2 | | | 2 | |
| **MEP-806** | 4 | 3 | 2 | 2 | | | |
| **MEP-805** | | 2 | 1 | | | | |
| **PSC/PDC** | | 1 | 1 | | | 1 | |
| **SDC** | | 10 | 6 | 8 | 2 | 5 | 2 |
| **PDP – 60kW** | 4 | 4 | | | | | |
| **PDP – 25 kW** | 16 | 55 | 52 | 22 | 3 | 23 | |
| **RALS** | | 2 | 2 | 1 | | | |
| **CRPA** | | 2 | 2 | | | 2 | |
| **10K Bladder** | | 2 | 2 | | | 2 | |

**Note:** Items and quantities are subject to change without notice.

## Chapter 2

## MAJOR SYSTEM COMPONENTS

**2.1. Deployable Power Generation and Distribution System (DPGDS).** The DPGDS provides electrical power generation and distribution equipment that is designed to support austere base prime power requirements. The DPGDS design is modular, providing the capability to support a broad range of contingency operations that require electrical power. Contingency operations ranging in size from relatively small deployments requiring power generation and distribution at the hundreds of kilowatt level to very large operations requiring power generation at the multi megawatt level can be supported using DPGDS equipment. A brief description of the DPGDS major components follows.

2.1.1. MEP-12A. Until a reliable prime power generator is procured, DPGDS will continue to use the legacy primary power source, the MEP-12A (**Figure 2.1**). This generator set is a trailer-mounted diesel engine-driven, prime power (Type II), utility (class 2A), mode I unit that produces 750 kW at 60 Hz and 625 kW at 50 Hz with 0.8 power factor, lagging. It provides 2400/4160 volts, 3 phase, 4-wire, wye (2400 volts line-to-neutral; 4160 volts line-to-line) for 60 Hz operation; and 2200-3800 volts, 3 phase, 4-wire, wye (2200 volts line-to-neutral; 3800 volts line-to-line) for 50 Hz operation.

**Figure 2.1. MEP-12A Generator.**

2.1.1.1. The main control panel assembly allows local and remote start, stop, monitor, and control of the generator set in operation. Operation can be achieved up to 150 feet (45 meters) from the generator set.

2.1.1.2. There are two MEP-12A manufacturers, Fermont and MCII. MCII units start with serial number AW00001. See Appendix D in the T.O. for differences between the models. The use of the commercial manual shall be used for maintenance on the KT38 engine, the MCII units, serial number AW00001 and subsequent (see Appendix A of the T.O.).

2.1.1.3. The MEP-12A is designed to operate on a variety of fuels, which include DF-2, JP-4, JP-8 DFA (Arctic Grade Diesel), and commercial jet A-1. One MEP-12A consumes 55 gallons of fuel per hour at full load under normal environmental conditions, which equates to a consumption of about 1,320 gallons during daily operation. To ensure an adequate continuous fuel supply, connections are provided to accept fuel from two external fuel sources, such as a fuel trailer or a fuel bladder.

2.1.1.4. MEP-12A tow vehicles must be rated for a 25,000 pound towing capacity and have a pintal-hook. One MEP-12A completely fills a C-130 cargo aircraft.

2.1.2. Primary Switching Center (PSC). The Primary Switching Center (PSC) provides for interconnection and safe isolation of MEP-12A Generators and the connection of loads to the system (**Figure 2.2**). The basic electrical component of the PSC is the S&C Vista™ Switchgear. The S&C Switchgear is housed in an enclosure that provides both environmental protection as well as a stacking capability for transportation. The housed switchgear is referred to as a Primary Switch (PS). When used in conjunction with DPGDS applications, a PSC is comprised of a minimum of one PS, up to a maximum of two PSs.

**Figure 2.2. Primary Switch Center (PSC).**

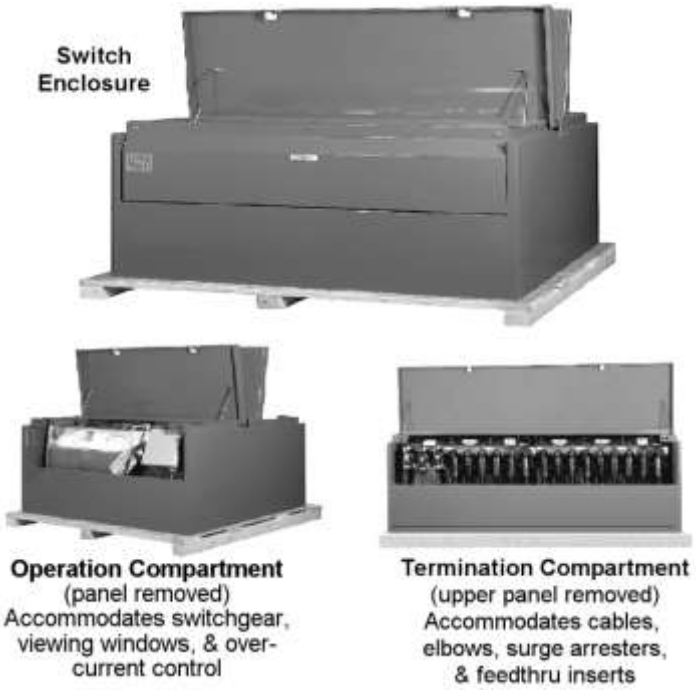


2.1.2.1. General Description. The Primary Switching Center (PSC) features load-interrupter switches for switching 600-ampere main feeders, and micro-processor controlled, re-settable, vacuum fault interrupters for switching and protection of 600-ampere main feeders. These elbow-connected components are enclosed in an SF6-insulated, welded steel tank. The three position (closed-open-grounded) load-interrupter switches are manually operated and provide three-pole live switching of 600-ampere three phase circuits. These circuits also provide a visible gap when open and internal grounding for all three phases. The 600-ampere fault interrupters feature re-settable vacuum interrupters in series with manually operated three-position (closed-open-grounded) disconnects for isolation and internal grounding of each phase.

Fault interrupters provide three-pole live switching of load circuits. Fault interruption is initiated by a programmable over current control. The Technical Order contains instructions on programming the control. All routine operating tasks, switching, voltage testing, and grounding must be ac-accomplished by a two-person team due to potential exposure of high-voltage. Cable testing for faults can be performed through the back of the dead break elbow with insert or feed-thru busing insert, thereby eliminating the need for cable handling or parking stands.

**Note:** PSCs are shipped with 600-amp deadbreak connections. A 600-amp to 200-amp adapter must be used prior to putting PSCs into service.

2.1.2.2. PSC Connections. The Primary Switch features six Way Switches and provides for 3 phase inputs from a MEP-12A Power Unit. Primary power (4160VAC, 60HZ, or 3800VAC, 50HZ, 3-phase, 3 wire) is supplied to the PSC via three primary cables. A primary power connection is accomplished by connecting three loadbreak elbows to the 600-amp-to-200-amp adapters that are connected to the PSCs bushing wells. The bushing wells are connected to the Way Switches, or "Ways." The function of each way is either a switch or a combination of a switch and a circuit breaker. A Load Interrupter Switch is comprised of only a switch. A Fault Interrupter Switch is comprised of a switch and a circuit breaker. Way 1 and Way 2 are Load Interrupter Switches; Way 3, 4, 5 and 6 are Fault Interrupter Switches. Depending on the configuration of a specific application, the Way Switches can either be inputs from a MEP-12A, or outputs (feeders) to a load such as an SDC or to another PSC.

2.1.2.3. Overcurrent Relay Settings. An Operator's Remote Terminal (ORT) and overcurrent control adapter cable is furnished with the PSC to input settings, review settings, and interrogate the event recorder. However, the software for programming the overcurrent control is contained within the control, allowing any computer meeting minimum system requirements to input settings as long as the adapter cable is available. Two data ports are provided—one on the enclosure for programming in the field, and another on the electronics module for programming in the shop. Procedures for pro-

gramming overcurrent controls are presented in T.O. 35F14-1-1, Attachment 3, Instruction Sheet 681-515, *Instructions for Programming S&C Overcurrent Control*.

2.1.3. Secondary Distribution Center. The SDC features a 150-KVA three-phase 2400/4160 VAC primary 120/208 VAC secondary utility transformer and a low-voltage secondary distribution panel. The SDC has 16 secondary outputs, 60 amps each (**Figure 2.3**), which are fed by 100 amp, 208 VAC output circuit breakers (16 each). The primary power terminals are configured for a loop through double feed configuration. The high-voltage power is connected using 200 amp load break quick disconnects, to a common high-voltage bus. The high-voltage bus is designed to accept one input and two outputs and is equipped with three sets of high-voltage disconnects. Two sets of disconnects are used to provide flow through capability. The third set are fused disconnects and provide overcurrent protection to the high-voltage side of the transformer. The low-voltage power distribution portion of the SDC provides 120/208 VAC, 60 HZ, 3-phase, wye connected with ground (5 wire system) from a 3-Phase 800 Amp distribution panel. **Note**: The SDCs are available with both the "Commercial Connector" and the "Class L Connectors." AF SDCs only come with Class-L connectors and will be the only ones discussed in this handbook.

**Figure 2.3. Secondary Distribution Center (SDC), Low-Voltage Side.**

2.1.4. Power Distribution Panel (PDP). PDPs receive power from SDCs and distribute it directly to both single and three phase loads. The DPGDS features four types of PDPs: 15kW, 25kW, 35kW and 60kW (**Figure 2.4**). Each PDP receives 120/208V, 3-phase, 60Hz, wye-connected 4-wire with ground power through a Class L (MIL-C-22992) connector and distributes to 3-phase Class L outputs, single-phase military standard outputs, and single-phase NEMA L5-20R outputs. All outputs are circuit breaker protected.

**Figure 2.4. Power Distribution Panels (PDP).**

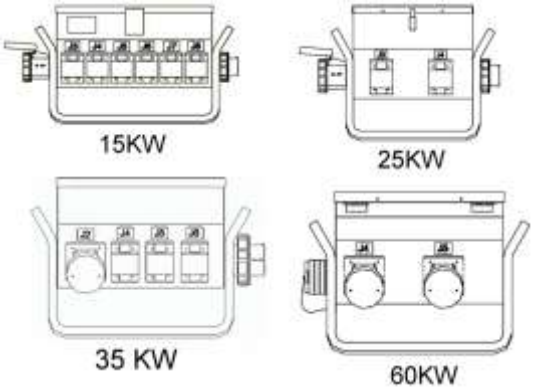


2.1.5. Remote Area Lighting System (RALS). The RALS provides a flexible solution to support illumination requirements. The RALS features 13 telescoping poles, twelve of which are positional through the use of "left-side" and "right-side" cable loop assemblies emanating from the RALS container. The 13$^{th}$ pole is mounted on the RALS container. Each RALS pole uses a single 150 watt, 16,000 lumen high-pressure sodium (HPS) lamp. The manual telescoping poles are aluminum and have locking collars. Each cable loop assembly is comprised of two (2) RALS loop cord sections of 375 feet each, thereby providing 750-foot of lighting string in each direction, for a total of 1,500 feet. **Figure 2.5** illustrates the RALS container and a representative pole.

**Figure 2.5. RALS Container and Light Poles.**

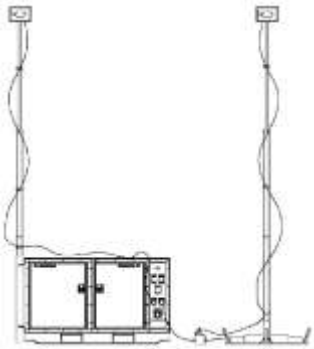

2.1.6**.** External Fuel System. Major components of the External Fuel System (EFS) are the manifolds, fuel lines, the 20,000 gallon fuel bladder and the Berm Liner.

2.1.7. Tactical Quiet Generators (TQG). Mission critical loads are supported with the following generators: six 15kW, four 30kW, and three 60kW TQG sets (**Figure 2.6**). Wheel kits are provided to allow ease of transport.

**Figure 2.6. Tactical Quiet Generators.**

2.1.7.1. MEP-804A. This generator is a diesel or JP-8 powered, mobile unit that provides 3-phase, 60 cycle, 120/208- or 240/416-volt power to support loads up to 15 kW. This generator may also be operated at 50 cycles, but will be derated to 12.5 kW.

2.1.7.2. MEP-805A. This is a diesel or JP-8 powered, mobile unit that provides 3-phase, 60 cycle, 120/208- or 240/416-volt power to support loads up to 30 kW. This generator may also be operated at 50 cycles, but will be derated to 25 kW. The MEP-805B model is provided with digital controls and instruments.

2.1.7.3. MEP-806A. This is a diesel or JP-8 powered, mobile unit that provides 3-phase, 60 cycle, 120/208- or 240/416-volt power to support loads up to 60 kW. This generator may also be operated at 50 cycles, but will be derated to 50 kW. The MEP-806B model is provided with digital controls and instruments.

2.1.8. Primary Power Cable. The 1/0, 200A cable provides the tie connections between the MEP-12A generators and the PSC/PDC, and is also used for power distribution. The primary cable uses load break elbows as primary connectors.

2.1.9. Secondary Power Cable. Secondary Power Cable connectors are Class L connectors and are keyed for voltage, frequency, and current. Covers, cable grips, and glands for both ends of the cable are supplied and properly secured to each connector.

2.1.10. Cable Reel Pallet Assembly. DPGDS primary cable is provided on three cables reels housed within a cable reel pallet (**Figure 2.7**).

**Figure 2.7. Cable Reel Pallet Assembly (CRPA).**

2.2. **Legacy Equipment.** The remaining Harvest Falcon and Harvest Eagle Electrical equipment items are being transitioned into BEAR sets. A description of these items follow.

2.2.1. Initial and Emergency/Back-up Generators. Harvest Series resources include three low-voltage generators used for initial beddown, specialized support, and as backup units for mission essential power (MEP).

2.2.1.1. MEP-005: The MEP-005 generator (**Figure 2.8**) is a diesel powered, mobile unit that provides 3-phase, 60 cycle, 120/208-volt power to support loads up to 30 kW. This generator may also be operated at 50 cycles, but will be derated to 24 kW.

**Figure 2.8. MEP-005 Generator.**

2.2.1.2. MEP-006: This generator (**Figure 2.9**) is diesel powered and produces 3-phase, 60 cycle, 120/208-volt power to support loads up to 60 kW. The generator may also be operated at 50 cycles (derate to 48 kW).

**Figure 2.9. MEP-006 Generator.**

2.2.1.3. MEP-007: This generator (**Figure 2.10**) is diesel-powered and produces 3-phase, 60 cycle, 120/208-volt or 240/416-volt power to support loads up to 100 kW. It has a manual speed control. The generator may also be operated at 50 cycles (derate to 80 kW).

**Figure 2.10. MEP-007 Generator.**

2.2.2. Primary Distribution Center (PDC). The PDC is a high-voltage switching station that receives and distributes 4,160-volt, 3-phase 3-wire delta electrical power from up to four input sources, such as generators, commercial power, or power distributed from another PDC (**Figure 2.11**). The PDC has six outputs, three on each side of the PDC, which distribute 2,400/4,160-volt (high-voltage), 60 Hz, 200-amp power to other components of the contingency electrical distribution system. The cables are connected with load break elbows (**Figure 2.12**) at the input side of the PDC from either the MEP-12A generator, the output side feeders of another PDC, or from a commercial power source. Except for the United States and Canada, there are only a few regions in the world with 60Hz power. The PDC may be fed from commercial power sources with 50Hz power from overseas commercial sources. There are no measuring devices on the PDC to assist the operator in determining overload, phase balance, power factor or under-load conditions for the individual feeders. The PDC weighs 6,660 pounds.

**Figure 2.11. Primary Distribution Center.**

**Figure 2.12. Load Break Elbow (secured with Grip-All clamp stick).**

2.2.3. High-Voltage Distribution Cable. High-voltage, primary power is distributed on #1/0 aluminum, 5,000-volt, cross-linked polyethylene cable with wrapped concentric ground wires. For primary distribution, three phases are required – phases A, B, and C. If color codes are used, Phase A is Black, Phase B is Red, and Phase C is Blue. Cable is supplied on 3,750-foot cable reels, three reels per cable skid, one reel per phase as show in **Figure 2.7**. Three cables reels on a skid weigh approximately 5,625 pounds, which equates to about one-half pound per linear foot.

**Note:** While cables are labeled A, B, and C, they may not be shipped that way. Also, be aware that if you are supporting a joint forces bed down, a different color-coding scheme may be used. Always ensure that phases A, B, and C are maintained throughout the entire system, and if used, color-coding identification kept uniform for the entire electrical system.

2.2.4. Secondary Distribution Center (SDC). The 150 kVA SDC receives 2,400/4,160-volt (at 60Hz), 3-phase 3-wire delta electrical power, and transforms and distributes 120/208-volt (at 60Hz), 60-amp, 3-phase low-voltage power (**Figure 2.13**). The 150 kVA SDC has one input source using three load break elbows and provides secondary output through a dry type transformer to 16, 60-amp, cannon-type plugs.

**Figure 2.13. Secondary Distribution Center.**

2.2.4.1. The SDC has the capability to receive power from an emergency/back-up generator (MEP-005, 006, or 007) through a low-voltage cannon-type plug. The SDC also has sub-station capability to distribute 2,400/4,160-volt power to two other SDCs using two sets of three 3-phase cables with load break elbows. When only one MEP-12A is required to provide power to a limited area, the SDC may be used without a PDC to distribute primary power through cables and load break elbows to other SDCs and users' power distribution panels.

**Note:** This configuration provides a lower margin of safety for preventing damage to the generator. In its standard configuration, the SDC is not equipped with fuses to provide overcurrent protection during distribution of primary power.

2.2.5. Secondary (Low) Voltage Distribution Cable. Low-voltage (120/208-volt) power is distributed with two different sets of cable. Power from emergency generators to the SDC is supplied with a 25 foot cable, which is either

#4/0 200-amp cable, 3-phase 4 wire with ground, or #6 60-amp cable, 3-phase 4 wire with ground (**Figure 2.14**). Low-voltage power is also distributed from the SDC to power distribution panels with 50-foot and 100-foot #6 60-amp cable, 3-phase 4 wire with ground. The cables use military-style class-L connectors, also referred to as cannon plugs (**Figure 2.15**).

**Figure 2.14. Mission Essential Generator Connected to SDC.**

**Figure 2.15. Low-Voltage Cables with Cannon Plug Connections.**

2.2.6. Power Distribution Panel (PDP). The PDP is a low-voltage circuit breaker panel. PDPs come in several sizes and functions: 15 kW, 25 kW, 30 kW, 60 kW, 100 kW, and 200 kW (**Figure 2.16**). The PDP receives

120/208-volt, 3-phase power from the SDC and distributes and controls it in a panel board under a weather resistant cover, or dead front panel. Individual 3-phase and single-phase circuit breakers control power output to military-style Class L connectors and NEMA-style 'twist lock' connectors, for connection by cable to users' equipment.

**Figure 2.16. Typical Power Distribution Panels.**

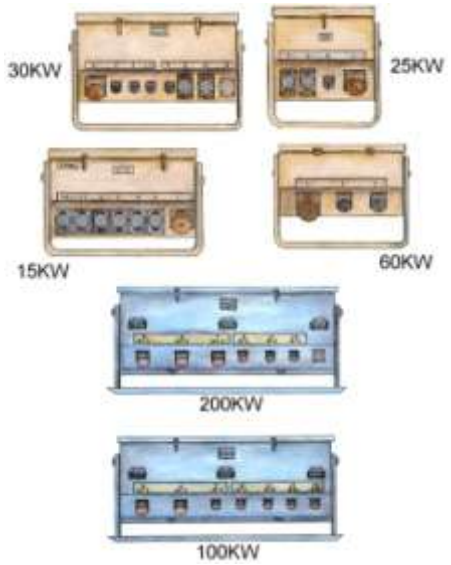


2.2.6.1. The larger PDPs (i.e., 60 kW, 100 kW, and 200 kW) can provide service as sub-distribution centers to other PDPs and major loads. Smaller PDPs usually serve a single facility's HVAC, lighting, and utility outlet systems, and come with the facility being served.

2.2.6.2. In lieu of a PDP, some facilities such as aircraft hangars, large and medium frame-supported tensioned fabric structures, Dome shelters, hard-wall General Purpose (GP) shelters, and Expandable Shelter Containers (ESCs) have power distribution centers that are a part of the facility.

2.2.6.3. The 15, 25, and 30 kW PDPs have smaller cannon plug connections. The 60, 100, and 200 kW PDPs should have 200 amp connection plugs, but check on the type of connection required for the specific PDP and use the T.O. Some PDP models may have to be hard-wired through the bottom of the PDP panel if they do not have the larger 200 amp cannon plug connection.

2.2.7. Additional Associated Legacy Equipment. The following components are also associated with the generation, installation, or operation of the legacy electrical distribution systems.

2.2.7.1. Equipment Rack. The MEP-12A generator control panel can be removed from the generator and moved to a remote location using a maximum of 150-foot of control cable. An equipment rack (**Figure 2.17**) can hold up to four control panels to supply a centralized control room for power plant operations. The control room is generally located in an expandable shelter container (ESC), or it can be situated in a tent or general purpose/medium shelter. **NOTE:** The equipment racks will also be used with the DPGDS systems.

**Figure 2.17. Equipment Rack with Generator Control Panels.**

2.2.7.2. Fuel Bladder System. Two 10,000-gallon fuel bladders are provided for the power plant. An additional 10,000-gallon fuel bladder is included in

the industrial operations set. The fuel bladder is either 22 feet wide by 22 feet long (**Figure 2.18**) or 12 feet wide by 42 feet long when unfolded from the shipping container. When filled, the bladder is approximately 4 feet high and its footprint shrinks about 1 to 2 feet in both directions. The bladder has a filler/discharge connection on each end, one for fuel filling and one for supplying the generators. The bladders also have a pressure relief valve/vent assembly. The fuel is piped to the generators through a 3-inch diameter suction hose that is attached to a distribution hose. The distribution hose feeds a fuel manifold (**Figure 2.19**), which then distributes the fuel to two, 1-inch diameter, 25-foot long fuel lines that can supply two generators. The manifold has a pass through capability to allow fuel to be further distributed to additional manifolds.

**Figure 2.18. Typical (22x22) Fuel Bladder.**

**Figure 2.19. Fuel Manifold.**

2.2.7.3. Remote Area Lighting System (RALS). The RALS is used to provide general, wide area lighting within the power plant area. The RALS has 250 feet of service cable and may be supported by either a SDC or MEP generator. A RALS contains 13 telescopic two-lamp light poles, four 375-foot cable sets, and an aluminum container/control box. Light poles are spaced every 125 feet along the cable sets.

**2.3. System Composition.** A typical contingency electrical distribution system is depicted in **Figure 2.20**.

2.3.1. When all system components are placed together, they create an electrical system with three subsystems: power generation, primary power (high-voltage) distribution, and secondary power (low-voltage) distribution.

2.3.2. The primary system components are tied together with high-voltage cable, using load break elbows, from the prime generator through the PSC/PDC, and on to the SDC.

2.3.3. The secondary system starts at the SDC and is provided to the user's PDP, or service panel, through secondary voltage cables using cannon plug connectors. The input can be made from either a prime generator, the output side feeders of another PSC/PDC, or from a commercial power source.

**Figure 2.20. Basic Electrical Distribution System Schematic.**

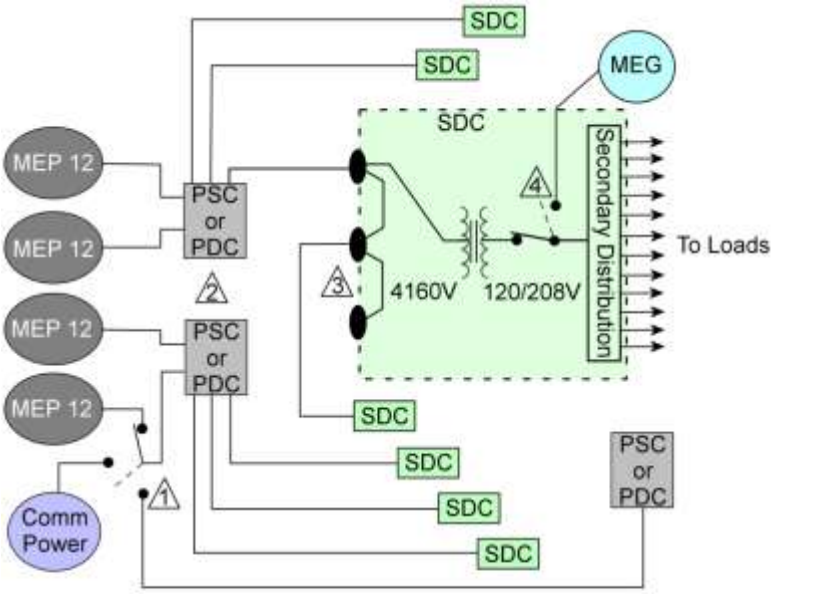


1 Source to PDC/PSC: generator, commercial power, or other PDC/PSC

2 Either one PDC or two PSCs for 4-unit plant

3 Primary feed-thru taps to other SDCs

4 Manual transfer switch from primary power to emergency/back-up generator

## Chapter 3

## SITE PLANNING AND LAYOUT

**3.1. Siting.** The siting of facilities around an austere base is influenced by the topography and climatic conditions, the principle of grouping functionally related facilities to improve efficiency, ensuring the security of personnel, and the expedient establishment of flying operations—the number one priority. While the general groupings can vary, there are three distinct functional areas: Flightline Operations and Maintenance, Industrial Operations and Base Support, and the Cantonment Area (living and services facilities).

3.1.1. Austere base and utility planners should recognize that the increase in physical size and number of facilities for each facility group usually is not directly proportional to the increase in base mission size/population.

3.1.1.1. Most functional groups will not triple in facilities, size, or utility support when going from a 1,100-person to a 3,300-person mission. Supply, Transportation, and Civil Engineering functions increase only marginally, while Billeting, Maintenance, Squadron Operations, and Wing Operations increase between 2 to 3 times their size and facilities.

3.1.1.2. Locations must be identified for additional kitchens, laundries, power and water plants, and sanitary waste facilities—each of which may require large support areas and new electrical utility and backup generator support. The up-front planning for the layout of facilities should take into account that the base may only be able to expand in a few directions without creating conflict with previously sited roads, facilities, and utilities.

3.1.2. Paramount to base security and proper utilities siting is to determine facility dispersal requirements. One SDC can serve most typical high-power demand small facility group dispersal patterns as shown in **Figure 3.1**. However, the typical two SDCs per 24 non-dispersed facilities group (**Figure 3.2**) will probably not cover the 24 (plus) dispersed facilities (**Figure 3.3**) and still meet voltage drop power distribution versus distance guidelines.

**Figure 3.1. Dispersal Patterns for 3-, 6-, 9-, and 12-Facility Groupings.**

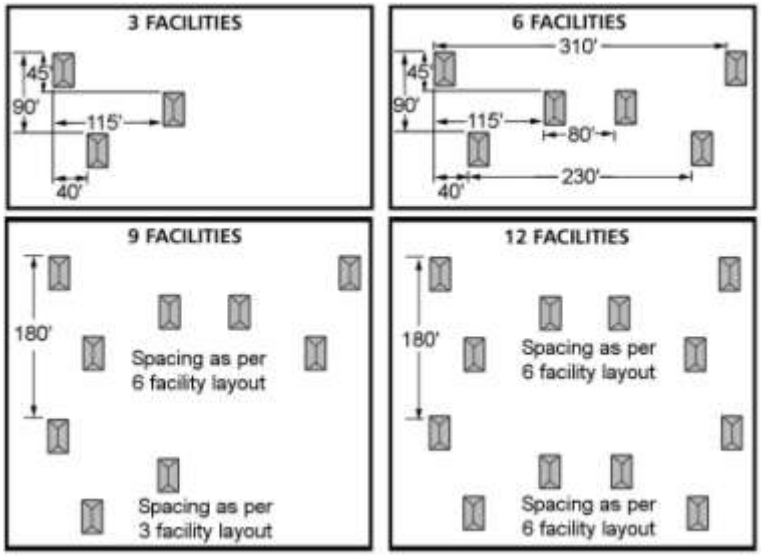


**Figure 3.2. SDC Placement for Non-Dispersed 24-Facility Grouping.**

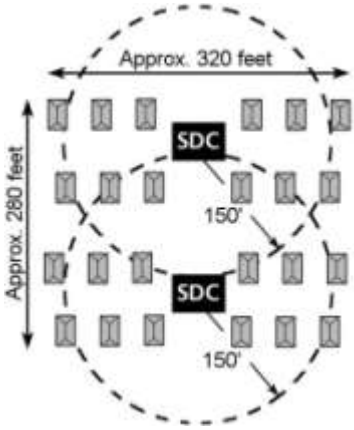

**Figure 3.3. Insufficient No. of SDCs for Dispersed 24-Facility Grouping.**

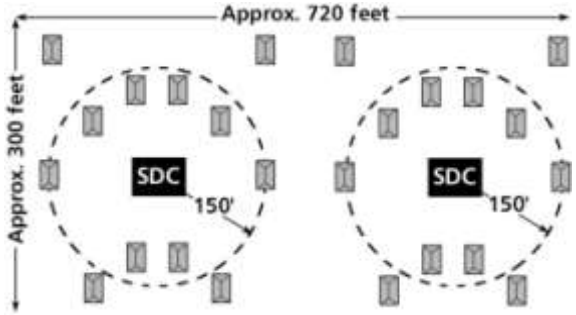


3.1.2.1. If most or all facilities require ECUs (such as for billeting) and/or high-quality power with little voltage drop, a significant increase in SDC numbers will be required to support the same number of facilities (**Figure 3.4**). Facilities that do not require higher quality power can be located further distances from SDCs, thus requiring fewer numbers to support the same number of facilities as shown in **Figure 3.3**. While it is possible to change SDC transformer taps to account for voltage drop on longer runs, it is time consuming and will slow down rapid replacement of a failed SDC, and could provide voltage that is too high for some facilities.

**Figure 3.4. Five SDCs Supporting Dispersed 24-Facility Grouping.**

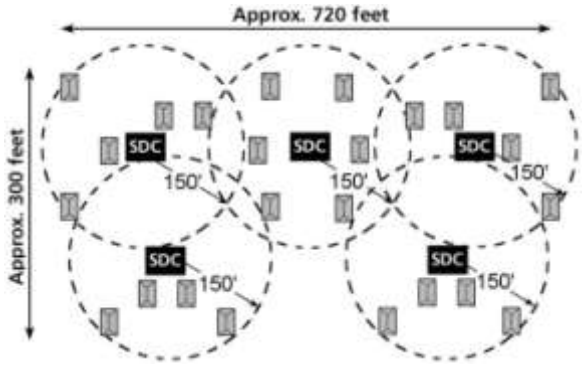

3.1.3. Austere base officials and site planners must examine the threat and determine with the air base defense (ABD) forces if dispersal is the best means for protection. Even in higher threat areas, the topography, enemy capabilities, and the base defense force measures (such as use of force protection and CCD techniques) may allow semi- or non-dispersed facility patterns within groups to be used much more effectively with wider group separation distances. Eliminating unnecessary terrain with priority targets is a consideration, as it may require more ABD forces to defend. Having fewer widely dispersed facilities within a group also gives added flexibility to ABD forces, providing greater control for lines of sight and avenues of approach to non-dispersed and/or critical resources.

**3.2. Site Planning.** By the time most power production and electrical personnel begin arriving on site to set up the power plant and electrical distribution system, the basic site planning and paper layout for the base may well have been accomplished. Sectors and basic planning modules of facility groupings will have been designated for air base operations, support, and defense. If an austere base is being established with a view toward expansion, then growth needs to be addressed during all stages. Therefore, the layout of individual facilities during the initial stages of layout should also take growth of the utility systems into account.

3.2.1. When installing contingency electrical distribution systems, consider the timelines for installation and growth, assets available to you at each stage of growth, whether additional assets are needed and available, and the duration of the deployment. These considerations will affect installation planning decisions and the operating and expansion capabilities. Decide up front where to specifically locate major electrical components within the time frames and resources given. Establishment of an austere base normally follows a pattern that is comprised of four stages: 1-initial, 2- intermediate, 3-follow-on, and 4-sustainment. The critical tasks for establishing a power generation and distribution system are found in the first two stages.

3.2.1.1. Initial Stage. During the initial stage of an austere base development, engineer efforts are concentrated on accomplishing those tasks that are ne-

cessary to meet the requirement for combat sortie generation within 72 hours. The following tasks are included in the initial stage.

3.2.1.1.1. Provide mission essential power to critical facilities using mobile generators (up to 100 kW in size).

3.2.1.1.2. Set up emergency security/area lighting.

3.2.1.1.3. Start layout and trenching for utility systems.

3.2.1.2. Intermediate Stage. During the intermediate stage of austere base development, emphasis is to provide the ability for all base agencies and functions to establish basic operating capability within the first 10 days of deployment. The primary electrical power concern is to establish a base power system and connect facilities to it as the facilities are erected. Tasks in this stage include:

3.2.1.2.1. Establishing power plant(s).

3.2.1.2.2. Laying out and burying the high-voltage distribution cabling and connecting the primary and secondary distribution centers.

3.2.1.2.3. Connecting base facilities to power system as they are erected.

3.2.1.2.4. Connecting back up generators to mission critical facilities after they are connected to the power grid.

3.2.2. Upon arrival at the deployed location, start gathering facts that will dictate the type of power system required. Some facts you will need are:

3.2.2.1. If the threat is low and the size of the base is only a 1,100-person package, only one centralized power plant may be all that is needed.

3.2.2.2. If facility dispersal is required, two power plants will probably be required to cover the extended area.

3.2.2.3. If two plants are required, are enough PSCs/PDCs available?

3.2.2.4. Can plants be set up to allow a connection between power plants?

3.2.2.5. Is there enough cable to connect between the power plants?

3.2.2.6. Can SDCs from the separate plants be located close enough to quickly lay and park cable between critical SDCs for redundancy?

3.2.3. For an 1,100-person package, the issues above may be easily addressed after rechecking facility groupings, loads, and layout plans. However, the situation can become increasingly complicated when considering additional transient aircraft, personnel support, and/or beddown expansions above 3,300 persons, especially if dispersed. The larger the size of the area to be served, the more resources required for setup, support, and security.

3.2.4. Determine the system power factors and how they may affect your power plant operations throughout the planning, installation, and operation of the electrical generation and distribution system,. Consider the following basic limiting factors when laying out the electrical system during the initial and intermediate stages of installation. These system limitations are based on transmission and distribution distances from the generators to the PSC/PDC, the PSC/PDC to the SDCs, and the SDCs to the PDPs.

3.2.4.1. Keep the primary (high-voltage) power cable runs between the MEP-12s and PDCs to the shortest distance possible.

3.2.4.2. Limit the primary (high-voltage) power cable runs from the PSC/PDC to the SDCs to 1.0 mile where the SDCs are grouped at the end of the run. A 1-mile run may still experience excessive voltage drop, but can be partially compensated for by adjusting the tap settings of the SDC. To avoid changing tap settings, limit the length of a run from the PSC/PDC to the SDCs to 4,000 feet.

3.2.4.3. Primary runs between the PSC/PDC and SDCs should not exceed 2.0 miles where the SDCs are equally distributed along the run. Again, a 2-mile run may experience excessive voltage drop that requires SDC tap adjustments. To avoid changing tap settings, limit the length of a run from the PSC/PDC to the SDCs to 1.5 miles.

3.2.4.4. Limit secondary runs from SDCs to PDPs and facility distribution panels to 750 feet when it is necessary to keep the voltage drop below 10% for the serviced facility. Longer runs may be made for emergency use and use with resistance type equipment less vulnerable to voltage drops.

3.2.5. Electrical distribution schematic. When the overall base-planning layout is being developed, an electrical distribution schematic should be a major component for base support. During the beddown process, planners, power production, and electrical personnel need to calculate, determine, and/or identify load factors, demand, maximum draw, and diversified load as related to individual facility groups. The specific information is used to develop a detailed secondary distribution schedule, placement of mission essential generators, and develop individual feeder schedules used for installation. Given time and expertise, going into this amount of detail during the initial beddown planning will significantly limit the need to relocate SDCs, re-site/relocate facilities, and relocate cable runs. During initial planning, basic planning factors can be followed to help minimize reaccomplishing work. Detailed schedules should be accomplished prior to installing the electrical distribution system.

3.2.6. Basic electrical planning factors. During normal operations, not every prime generator will be running at full load all the time. The system design should take into consideration the number of generators that will operate fully loaded around the clock at each power plant.

3.2.6.1. For a 1,100-person base, there may be three or four generators at the main plant and one or two generators at the flightline plant. Only one of the two generators may be required for 24-hour operations at the flightline plant.

Only one generator at the main plant may be required to operate at full load over night.

3.2.6.2. Where environmental control units sustain their continuous maximum amperage draw, consider the maximum load that one generator can support through the PSC/PDC and SDCs. The total load on each SDC should not exceed 150 kVA and the load on each SDC circuit should not exceed 21.6 kVA.

3.2.6.2.1. One MEP-12, 750 kW generator (operating at 80% of its maximum capacity) will support no more than 5 SDCs per one 200-amp PSC/PDC output circuit when facilities are operating at maximum loads with FD-ECUs.

3.2.6.2.2. Under normal operating loads, a power plant with at least two generators operating will support 6 to 10 SDCs per PSC/PDC circuit when facilities have FDECUs, and 10 to 15 SDCs per circuit when facilities do not have FDECUs.

3.2.6.2.3. In the DPGDS system, each SDC has two high voltage output circuits. There are two sets of loadbreak elbow connections for feed through capabilities to additional SDCs. A maximum of five SDCs can be supported from point of origin (power source). Only 10 shelters per SDC can be connected when the FDECU is used in each shelter. By properly balancing the number of SDCs per plant, the number of SDCs per PSC/PDC should not exceed this maximum number.

**Warning**

At full load, the FDECU draws 41 amps. For ambient temperatures over 125°F, do not operate SDCs over 80% load (i.e., no more than 8 of 16 output connections used).

**3.3. Layout**. Layout decisions must consider the threat, type of system to be installed (radial or loop), and expected final size of the base being supported.

3.3.1. Most expeditionary bases with a recognized threat have to first consider the basic expeditionary base structure from an air base defense point-of-view, combined with normal base operating requirements. In many cases, the tactical area of responsibility (AOR) boundary for base defense may dictate the initial installation pattern for the electrical system. For some locations, the tactical AOR may dictate a linear base structure (**Figure 3.5**), that is designed along a flightline where the base is long and narrow. In this case, a radial electrical distribution system (**Figure 3.6**) may initially be required.

3.3.2. When defense boundaries allow a more conventional layout to be considered, especially if the base will be larger than one or two squadrons, support facilities, billeting, and services functions can be progressively moved away from the flightline and industrial support functions (**Figure 3.7**).

**Figure 3.5. Linear Base Layout.**

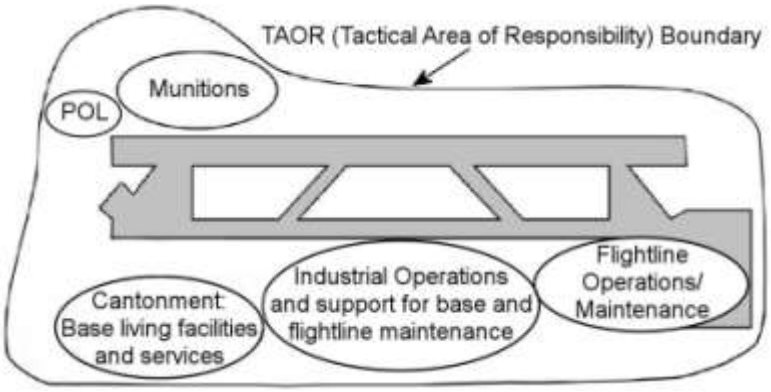

**Figure 3.6. 1,100-Person Radial Electrical Distribution System.**

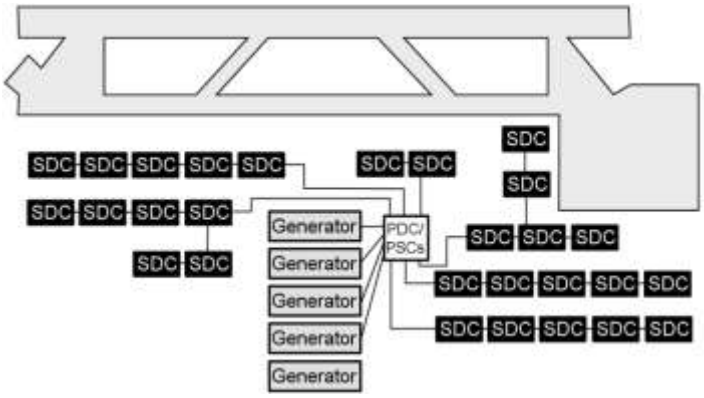


**Figure 3.7. Conventional Type Base Layout.**

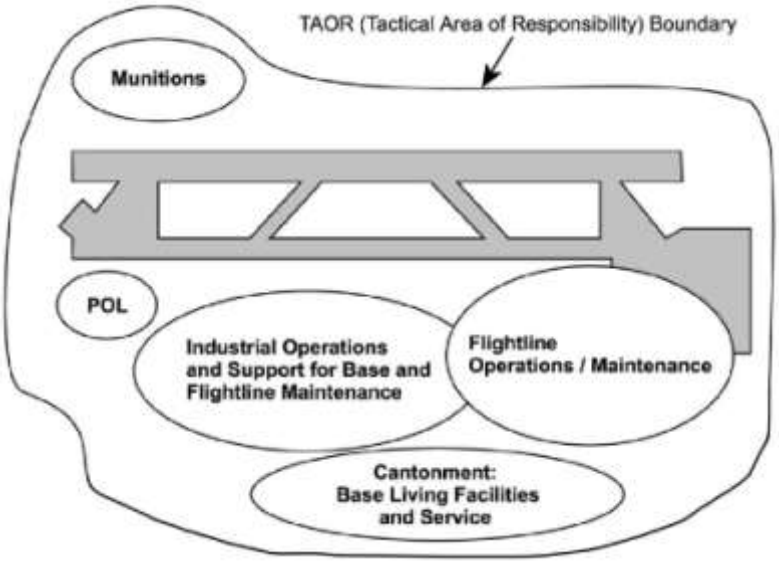

3.3.2.1. For this type layout, a simple interconnected electrical distribution system, referred to as a loop electrical distribution system, may be possible between two power plants, even during the initial installation. If a base has two or more PDCs, or two or more sets of PSCs, it may be possible to run a completely looped system. Two sets of cables would interconnect the PSCs/ PDCs in a ring (**Figure 3.8**).

**Figure 3.8. 1,100-Person Looped Electrical Distribution System.**

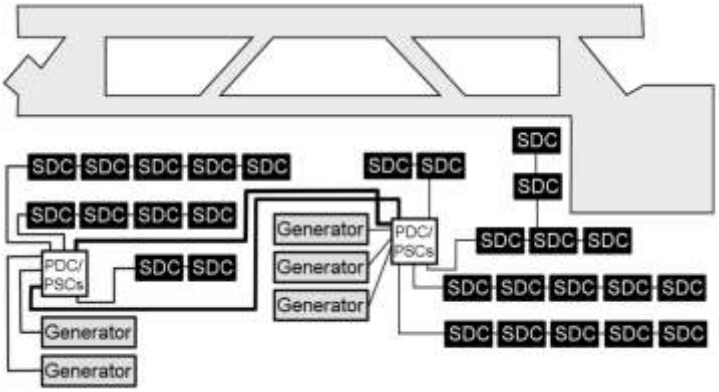


3.3.2.2. If this is not possible, at least one set of additional cables should be run to allow interconnecting between PSCs/PDCs (**Figure 3.9**). This will allow interconnecting the systems if generators have to be taken off-line or additional loads are added.

3.3.2.3. For critical facilities, especially those that require backup generators, SDCs can also be connected with parked cables (**Figure 3.10**). This will allow SDCs to be quickly connected in case one of the feeder circuits is disrupted.

**Figure 3.9. 1,100-Person Interconnected Electrical Distribution System.**

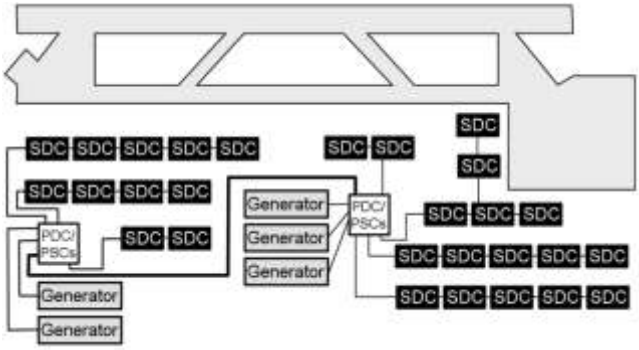


**Figure 3.10. Critical Facility SDCs Connected By Parked Cables.**

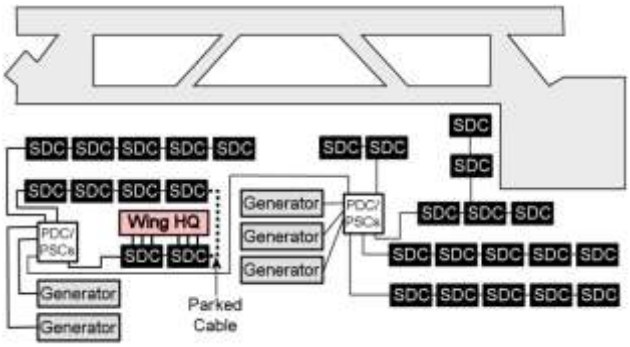


3.3.3. Power Plant Layout. There is no mandatory way to lay out individual equipment items as long as available resources are not exceeded, systems can operate safely, and the system is installed in a secure environment. Key concerns for laying out the plants are: security of critical resources, available land for the power plant, siting to prevent noise intrusion, siting for system redundancy, vehicle and equipment accessibility, and the available lengths of cable and fuel lines, especially during initial arrival. See **Chapter 5** for specifics on contingency power plant layouts.

3.3.4. Typical Facility Groups. Deployment packages are standardized for the types of facility structures that serve each functional grouping. For planning purposes, functional groupings vary little and carry a common designation. The following tables identify basic designations for facility groups and types of structures supplied to house major functions (**Tables 3.1** and **3.2**). Changes in number of assets within UTCs may cause variations; always confirm what the final configuration of assets will be for your deployment.

**Table 3.1. 1,100-Person Bare Base Facility List.**

| Area | Facility Group | Structure Type | | | | |
|---|---|---|---|---|---|---|
| | | TEMP/ SSS | ESC | GPS/ MSS | ACH | FSTFS/ Dome |
| A | Avionics | | 1 | 3 | | |
| B1, B2, | Lodging (may be subdivided by female, enlisted,& officer) and Services Admin | 105 | | | | |
| C | Chapel | 1 | | | | |
| D | Services (Dining Hall) | 1 (9-1) | | | | |
| E | Engineer | 14 | 1 | 3 | | |
| F | Maintenance | 4 | 10 | 5 | 2 | 1 |
| G | Squadron Operations | 1 | 1 | 1 | | |
| H | Support Group | 8 | 5 | 2 | | |
| I | Emergency Services | 10 | | | | |
| J | Aerial Port | 3 | | | | |
| L | Laundry | 2 | | | | |
| M | Munitions | 1 | | 3 | | |
| P | POL | 1 | 1 | | | |
| R | Alert | 3 | | | | |
| S | Supply | 2 | 2 | | | 7 |
| T | Transportation | 2 | | | | 3 |
| W | Wing Operations | 10 | 3 | | | |
| X | Hospital | | | | | |
| Y | Communications | | | | | |
| Z | Airfield Facilities | | | | | |
| EW1, EW2 | Water Plant(s) | 2 | | | | |

**Table 3.2. 3,300-Person Bare Base Facility List.**

| Area | Facility Group | Structure Type | | | | |
|---|---|---|---|---|---|---|
| | | TEMP/ SSS | ESC | GPS/ MSS | ACH | FSTFS/ Dome |
| A | Avionics | 1 | 3 | 4 | | |
| B1, B2 | Lodging (may be sub-divided by female, enlisted,& officer) and Services Admin | 315 | | | | |
| C | Chapel | 1 | | | | |
| D1, D2 | Services (Dining Hall) | 2 (9-1) | | | | |
| E | Engineer | 19 | 3 | 3 | | |
| F | Maintenance | 6 | 12 | 12 | 4 | 1 |
| G1, G2 | Squadron Operations | 4 | 3 | 2 | | |
| H | Support Group | 18 | 5 | 2 | | |
| I | Emergency Services | 13 | | | | |
| J | Aerial Port | 5 | | 2 | | |
| L | Laundry | 6 | | | | |
| M | Munitions | 2 | | 6 | | |
| P | POL | 1 | 1 | | | |
| R | Alert | 3 | | | | |
| S | Supply | 3 | 2 | | | 7 |
| T | Transportation | 3 | | | | 3 |
| W | Wing Operations | 25 | 3 | | | |
| X | Hospital | | | | | |
| Y | Communications | | | | | |
| Z | Airfield Facilities | | | | | |
| EW1, EW2 | Water Plant(s) | 6 | | | | |

3.3.4.1. Which facilities go where varies from location to location. In most cases, physical size and topographic conditions may constrain or dictate the basic base layout (e.g., a linear or conventional layout). The functional inter-relation of flightline operations, maintenance, and command structures may also dictate that some facilities and functions be collocated differently, especially if the base supports other US or allied military services.

3.3.4.2. All deployment eligible CE units should practice the layout of functional areas during home station training. Layouts should focus on which facilities require close proximity to each other, both within and between facility groups, in order to function effectively and efficiently. Site planners need this information during the "Open the Airbase" phase of the deployment. This will also provide the opportunity for power production and electrical systems personnel to practice layout of the electrical generation and distribution system and calculate secondary distribution requirements and feeder schedules.

3.3.4.3. Cables provided with electrical generation and distribution systems are adequate for initial installation based on non-dispersed facility separation guidelines found in **Table 3.3**. However, if high-threat conditions require facility dispersal at the maximum distances indicated in **Table 3.3**, some non-critical facilities may require portable generator support, and/or additional primary and secondary cable and connectors. Be aware that required separation criteria for some facilities (such as Munitions, POL, and LOX) can be varied based on terrain, protection of assets, and mission/weapons systems and should be determined for each individual base. This could have a major impact on the layout of power plants, SDCs, and MEP generators.

**Table 3.3. General Separation Distances for Facilities in Groups.**

| Facility Groups | Facilities to be Separated | Distances (feet) | |
|---|---|---|---|
| | | Non-Dispersed | Dispersed |
| **Billeting** | Between tents (in separate billeting groups) | 30 | 150 |
| | Between tents (side by side, same group) | 12 | 12 to 20 |
| | Between tent rows (same group) | 30 | 30 to 60 |
| | Between tents and latrines/shower shave units | 60 + (100 [1]) | 60+ (100 [1]) |
| | Billeting & Industrial/Flightline groups, except Trans & Flying Squadrons | 150 [2]<br>150 [2] | 1,600<br>900 |

| Facility Groups | Facilities to be Separated | Distances (feet) | |
|---|---|---|---|
| | | Non-Dispersed | Dispersed |
| **Shelters (ACH, GP, FSTFS)** | Between shelters (side by side, same group) | 30 | 60+ |
| | Between shelter rows | 60 | 60+ |
| | Between shelters (side by side, different groups) | 150+ | 200+ |
| **Industrial and Flightline Shops** | Between shops (side by side, same group) | 30 | 60 |
| | Between shop rows (same groups) | 30 | 30 to 60 |
| **All Groups (except Lodging, Munitions, LOX, & POL)** | Between groups | 150 | 200 |
| **Munitions** | Within Munitions area | See note 3 | See note 3 |
| | Munitions to inhabited facilities | See note 3 | See note 3 |
| | Munitions area, LOX, and POL | See note 3 | See note 3 |
| **LOX facility** | LOX and inhabited facilities | 1,500+ | 1,500+ |
| | LOX and POL | 2,640+ | 2,640+ |
| **POL complex** | POL and inhabited facilities | 2,640+ | 2,640+ |

**Notes:** [1] Suggested per sanitation criteria, **AFPAM 91-216, *USAF Safey Deployment and Contingency Pamphlet***

[2] Noise and industrial type lighting are factors in siting criteria

[3] Per **AFMAN 91-201, *Explosive Safety Standards***, Chap 3, see Austere Area Criteria

3.3.5. Growing from a 1,100- to a 3,300-Person Base. As previously mentioned, when a 1,100-person base expands by 2,200 persons to accommodate two additional squadrons, or even other missions, most assets needed for expansion usually do not triple with the population. When laying out the base, be aware that some functions require additional planning, either due to large size (i.e., an aircraft hangar, FSFTS shelter, a 9-1 kitchen, or a medical facility) or minimum separation requirements (i.e., a power or sewage plant).

3.3.5.1. An effective way to manage and delineate where facility groups will be placed is to **locate and line up the facility groups within a network of travel and emergency response routes** consisting of flightline pavement, roadways, and utility corridors (**Figure 3.11**).

**Figure 3.11. Typical 1,100-Person Layout with Major Roadway Grid.**

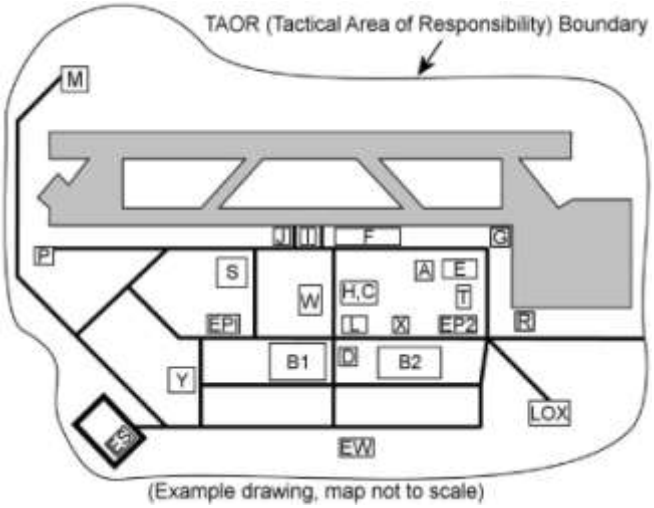


| | | | | | |
|---|---|---|---|---|---|
| **A** | Avionics | **F** | Maintenance | **R** | Alert |
| **B1,2** | Billeting | **G1,2** | Squadron Ops | **S** | Supply |
| **C** | Chaplain | **H** | Support Group | **T** | Transportation |
| **D1,2** | Dining Hall | **I** | Emergency Svcs | **W** | Wing HQ |
| **E** | Engineering | **J** | Aerial Port | **X** | Medical Fac. |
| **EP1,2** | Power Plant(s) | **L** | Laundry | **Y** | Comm Plant(s) |
| **ES1,2** | Sewage Treatment | **M** | Munitions | | |
| **EW1,2** | Water Plant(s) | **P** | POL | | |

3.3.5.1.1. If the base does not have a basic roadway system already established, then fire, security, and base planners need to make this a priority in the layout process. Roadways should be created and fit easily between the groups (within the group separation distances), while utility corridors and utility *right-of-ways* would run along and between the groups and roadways.

3.3.5.1.2. Facility group grids should then be established within the "blocks" created by roadways. Plan ahead; orient the tents/shelters and maintain adequate distances between each tent/shelter to allow room for ECUs and other utilities. Otherwise, utility corridors can become cluttered with equipment, which will make repairs, maintenance, emergency response, and removal of equipment more difficult.

3.3.5.2. With expansion, facilities will grow within the roadway system blocks (**Figure 3.12**). Flightline facilities (such as Maintenance and Squadron Operations) normally grow along the flightline. Industrial operations and base support functions (such as Civil Engineering, Wing Operations, and Support Group) normally expand outward and away from each other. Billeting functions normally expand away from the industrial operations, while additional key personnel services support functions (i.e., MKTs, latrines, 9-1 kitchens, and laundry) are located in areas where personnel are massed. Areas need to be reserved to allow for the growth of existing power and sewage plants and placement of new power plants.

**Figure 3.12. Typical Growth from 1,100- to 3,300-Person Layout.**

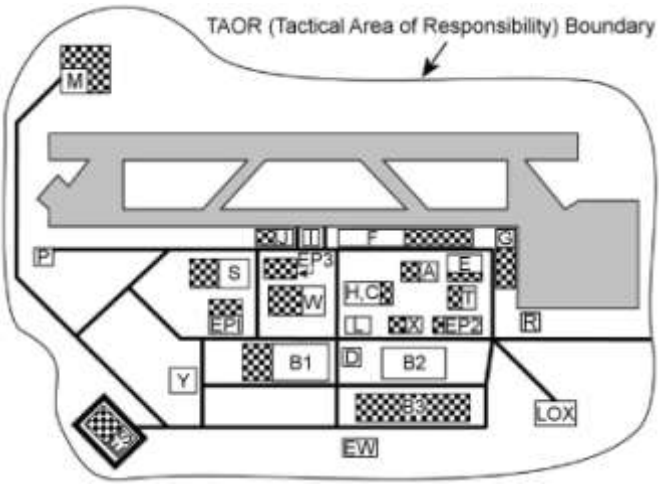

**3.4. Electrical Planning.** Contingency electrical systems are pre-engineered; however, they must be tailored to each beddown location. You must determine the electrical load on each secondary distribution center (SDC) and then determine the electrical load on each primary feeder. To do this, you must know the power that will be required for each facility. The information contained in this section will assist you in this task.

3.4.1. After determining what facilities will be erected in the base, the next step is to identify total electrical demand loads from these facilities. Each type of facility and function has a connected load, which is theoretically the maximum facility load if all equipment was operating at the same time. This will not be the case in most instances; therefore, a demand power load is more realistic. The demand load is the load that a facility would draw during normal operations. Expressed as a ratio, demand load over connected load provides a demand factor, which is normally less than 1.0. **Table 3.4** provides a list of typical demand factors by facility type and function. Actual demands may vary by mission and deployed equipment. Changes may be required for distribution and generation systems, including back-up MEP generator power; adjust demand factors and requirements as needed.

3.4.2. **Table 3.5** details the power requirements for all base facilities by facility groups, functions, and types of structures used to house the function, and typical electrical planning factors in columns four and five. A diversity factor is applied to the connected and air conditioning (AC) loads since not all equipment is not likely to be on at the same time. The diversity factors are usually 0.7 for connected power and 1.0 for AC power. Based on values determined either in the field, or taken from **Table 3.5**, total diversified power requirement is placed in the sixth column. This figure is obtained by multiplying the respective diversity factors with the respective connected power and adding that product to the AC power requirement. If total diversified load in column 6 is greater than the maximum allowable load on a single SDC circuit (i.e., 21.6 kVA at 100% load and 17.3 kVA at 80% load), then diversified load should be broken up between two circuits as shown in the last two columns. The seventh column is the requirement for mission essen-

tial power; standard values are provided in the table, but use the specific, mission-essential equipment loads if known.

**Table 3.4. Typical BEAR Demand Factors.**

| Type Facility | Function | Demand Factor | Type Facility | Function | Demand Factor |
|---|---|---|---|---|---|
| Temper Tent / Small Shelter System | Wing Admin/ Command | 0.9 | ACH | Hangar | 0.9 |
| | Billets | 1.0 | ESC | Engr Power Plant | 1.0 |
| | 9-1 Kitchen | 0.9 | | Avionics Shop | 0.7 |
| | Shower-Shave | 0.9 | | Pneudraulics Shop | 0.7 |
| | Latrine | 0.8 | | NDI Shop | 0.7 |
| | Laundry | 0.9 | | Elect Shop | 0.7 |
| | Engr Utility Shop | 0.6 | | Bearing Shop | 0.7 |
| | Engr Structures | 0.6 | | Parachute Shop | 0.8 |
| | Engr Electrical | 0.6 | | Wheel/Tire Shop | 0.7 |
| | Engr Fuels | 0.6 | | Gen. Maint Shop | 0.7 |
| | Squadron Ops | 0.9 | | Life Support Shop | 0.8 |
| | Base Admin | 0.9 | | BX | 0.8 |
| | Post Office | 0.9 | | Communications | 0.7 |
| | Legal Office | 0.9 | | Armory | 0.9 |
| | BX | 0.9 | | SRC | 0.9 |
| | Chapel | 0.9 | | POL Lab | 0.7 |
| | MWRS | 0.8 | | Sup Processing | 0.8 |
| | Fire Operations | 0.7 | GP Shelter / Medium Shelter System | Wing Intelligence | 0.8 |
| | Fire Tech Srvs | 0.8 | | Warehouse | 0.6 |
| | EOD | 0.7 | | Avionics Shop | 0.7 |
| | Base Operations | 0.7 | | Engr Pow Pro | 0.6 |
| | Engr Readiness | 0.7 | | Engr Eqpt Shop | 0.6 |
| | Mortuary | 0.8 | | Propulsion Shop | 0.7 |
| | Aerial Port | 0.8 | | AGE Shop | 0.7 |
| | Alert Facility | 0.9 | | Gen. Maint Shop | 0.8 |
| | Vehicle Ops | 0.7 | | Sqd Ops Support | 0.7 |
| | TMO | 0.7 | | Gen. Support | 0.7 |
| | Wing Briefing | 0.9 | | Aerial Port | 0.8 |
| | Wing Ops/ Plans | 0.8 | FSTFS | Munitions Maint | 0.7 |
| | Wing Intelligence | 0.8 | | Propulsion Shop | 0.8 |
| | Maint/Job Cntr | 0.8 | | Supply Storage | 0.9 |
| | Maint Mat Cntr | 0.7 | | Vehicle Maint | 0.7 |
| | Maint QC | 0.8 | | Packing/Crating | 0.7 |

**Table 3.5. Typical Harvest Falcon Electrical Planning Factors.**

| Facility Group | Function | Shelter Type | Power Requirement (Kilovolt-Ampere [kVA]) | | | | kVA per Circuit | |
|---|---|---|---|---|---|---|---|---|
| | | | Max Load | AC Load | Div. | MEP Load | #1 | #2 |
| A Avionics | Avionics 15 kVA | ESC | 15.0 | 10 | 20.5 | 11 | 20.5 | |
| | General Avionics | GP | 15.0 | 20 | 30.5 | | 20.5 | 10 |
| | Latrine | TT | 6.0 | | 4.2 | | 4.2 | |
| | RALS | | 7.2 | | 5.0 | | 5.0 | |
| B Billeting | Billets | TT | 4.5 | 10 | 13.5 | | 13.5 | |
| | Latrine | TT | 6.0 | | 4.2 | | 4.2 | |
| | Shower/shave | TT | 6.0 | | 4.2 | | 4.2 | |
| | RALS | | 7.2 | | 5.0 | | 5.0 | |
| C Chaplain | Chapel | TT | 7.8 | 10 | 5.5 | | 15.5 | |
| D Services | 9-1 Kitch-en/Dining | TT | Up to 150[1] | 70 | 150 ± 25[1] | 60 to 100 [2] | | 150 ± 25[2] |
| | RALS | | 7.2 | | 5.0 | | 5.0 | |
| E Engineer | Eng Command | TT | 5.2 | 10 | 13.6 | | 13.6 | |
| | Eng Mngmt | TT | 4.9 | 10 | 13.4 | | 13.4 | |
| | Mat. Control | TT | 7.0 | 10 | 14.9 | | 14.9 | |
| | Eng Operations | TT | 4.6 | 10 | 13.2 | 3 | 13.2 | |
| | Utilities | TT | 5.8 | 10 | 14.1 | | 14.1 | |
| | Structures | TT | 11.6 | 10 | 18.1 | | 18.1 | |
| | HVAC | TT | 7.8 | 10 | 15.5 | | 15.5 | |
| | Fuels | TT | 7.2 | 10 | 15.0 | | 15.0 | |
| | Electrical | TT | 7.3 | 10 | 15.1 | | 15.1 | |
| | Entomology | TT | 5.8 | 10 | 14.1 | | 14.1 | |
| | Power Pro | GP | 9.7 | 20 | 26.8 | | 16.8 | 10 |
| | Equipment | GP | 6.9 | 20 | 14.8 | | 14.8 | 10 |
| | Power Pro | ESC | 5.8 | 10 | 14.1 | | 14.1 | |
| | Water Plant | TT | 5.0 | 10 | 13.5 | | 13.5 | |
| | Latrine | TT | 6.0 | | 4.2 | | 4.2 | |
| | Eng Support | GP | 6.9 | 20 | 24.8 | | 14.8 | 10 |
| | RALS | | 7.0 | | 5.0 | | 5.0 | |

| Facility Group | Function | Shelter Type | Power Requirement (Kilovolt-Ampere [kVA]) | | | | kVA per Circuit | |
|---|---|---|---|---|---|---|---|---|
| | | | Max Load | AC Load | Div. | MEP Load | #1 | #2 |
| F Mainte-nance | Pneudraulics | ESC | 28.1 | 10 | 29.7 | 20 | 19.7 | 10 |
| | NDI | ESC | 7.7 | 10 | 15.4 | | 15.4 | |
| | Propulsion | FSTFS | 36.0 | | 25.2 | 21 | 15.2 | 10 |
| | Propulsion | GP | 15.0 | 20 | 30.5 | 10 | 20.5 | 10 |
| | Electrical | ESC | 15.6 | 10 | 20.9 | 11 | 20.9 | |
| | Bearing Clean | ESC | 5.8 | 10 | 14.1 | | 14.1 | |
| | AGE | GP | 8.2 | 20 | 25.7 | 6 | 15.7 | 10 |
| | Command/Adm. | TT | 6.2 | 10 | 14.3 | 4 | 14.3 | |
| | Parachute | ESC | 6.6 | 10 | 14.6 | 5 | 14.6 | |
| | Hangar | ACH | 36.0 | | 25.2 | 25 | 15.2 | 10 |
| | Wheel/Tire | ESC | 6.0 | 10 | 14.2 | | 14.2 | |
| | Latrine | TT | 6.0 | | 4.2 | | 4.2 | |
| | Gen Maint Sup. | GP | 10.0 | 20 | 27.0 | | 17.0 | 10 |
| | Gen Maint Sup. | ESC | 8.0 | 10 | 15.6 | | 15.6 | |
| | RALS | | 7.2 | | 5.0 | | 5.0 | |
| G Squad Ops | Squadron Ops. | TT | 5.9 | 10 | 14.1 | 4 | 14.1 | |
| | Life Support | ESC | 5.7 | 10 | 14.0 | 4 | 14.0 | |
| | Latrine | TT | 6.0 | | 4.2 | | 4.2 | |
| | Squad Ops. Sup. | GP | 6.5 | 20 | 24.6 | | 14.6 | 10 |
| | RALS | | 7.2 | | 5.0 | | 5.0 | |
| H Support Group | Reproduction | TT | 5.6 | 10 | 13.9 | | 13.9 | |
| | Post Office | TT | 3.9 | 10 | 12.7 | | 12.7 | |
| | BITS | TT | 5.2 | 10 | 13.6 | | 13.6 | |
| | Legal/Contract. | TT | 4.9 | 10 | 13.4 | | 13.4 | |
| | Personnel | TT | 4.6 | 10 | 13.2 | | 13.2 | |
| | Administration | TT | 5.0 | 10 | 13.5 | | 13.5 | |
| | Latrine | TT | 6.0 | | 4.2 | | 4.2 | |
| | Exchange | TT | 6.0 | 10 | 14.2 | | 14.2 | |
| | Exchange | ESC | 8.0 | 10 | 15.6 | | 15.6 | |
| | Gen Support | GP | 7.0 | 20 | 24.9 | | 14.9 | 10 |
| | Communications | ESC | 9.0 | 10 | 16.3 | 6 | 16.3 | |
| | MWRS | TT | 4.6 | 10 | 13.2 | | 13.2 | |
| | Armory | ESC | 4.5 | 10 | 13.2 | | 13.2 | |
| | Command/SRC | ESC | 4.5 | 10 | 13.2 | 4 | 13.2 | |
| | RALS | | 7.2 | | 5.0 | | 5.0 | |
| I Emer-gency Services | Fire Tech Svs. | TT | 5.0 | 10 | 13.5 | 4 | 13.5 | |
| | Fire Operations | TT | 4.5 | 10 | 13.2 | 3 | 13.2 | |
| | Security Police | TT | 4.5 | 10 | 13.2 | 3 | 13.2 | |
| | Disaster Prep. | TT | 4.5 | 10 | 13.2 | | 13.2 | |
| | EOD | TT | 6.2 | 10 | 14.3 | 4 | 14.3 | |
| | Base Operations | TT | 4.5 | 10 | 13.2 | | 13.2 | |
| | RALS | | 7.2 | | 5.0 | | 5.0 | |
| J Aerial Port | Mortuary | TT | 6.3 | 10 | 14.4 | 4 | 14.4 | |
| | Aerial Port | TT | 4.5 | 10 | 13.2 | 3 | 13.2 | |
| | Port Support | GP | 6.5 | 20 | 24.6 | | 14.6 | 10 |
| | RALS | | 7.2 | | 5.0 | | 5.0 | |

| Facility Group | Function | Shelter Type | Power Requirement (Kilovolt-Ampere [kVA]) | | | | kVA per Circuit | |
|---|---|---|---|---|---|---|---|---|
| | | | Max Load | AC Load | Div. | MEP Load | #1 | #2 |
| L Laundry | Laundry | TT | 10 | 10 | 17.0 | | 17.0 | |
| M Muni-tions | Command/Adm. | TT | 6.5 | 10 | 14.6 | 5 | 14.6 | |
| | Tool Crib | TT | 5.0 | 10 | 13.5 | 4 | 13.5 | |
| | Munitions Maint. | GP | 8.2 | 20 | 25.7 | 6 | 15.7 | 10 |
| | RALS | | 7.2 | | 5.0 | | 5.0 | |
| P POL | Administration | TT | 5.4 | 10 | 13,8 | | 13.8 | |
| | Laboratory | ESC | 4.5 | 10 | 13.2 | | 13.2 | |
| | RALS | | 7.2 | | 5.0 | | 5.0 | |
| R Alert | Alert Facility | TT | 5.4 | 10 | 13.8 | 4 | 13.8 | |
| | RALS | | 7.2 | | 5.0 | | 5.0 | |
| S Supply | Command/Adm. | TT | 5.1 | 10 | 13.6 | | 13.6 | |
| | Demand Proc. | ESC | 5.1 | 10 | 13.6 | | 13.6 | |
| | Latrine | TT | 6.0 | | 4.2 | | 4.2 | |
| | Storage | FSTFS | 10.0 | | 7.0 | | 7.0 | |
| | RALS | | 7.2 | | 5.0 | | 5.0 | |
| T Trans-portation | Vehicle Ops. | TT | 4.5 | 10 | 13.2 | | 13.2 | |
| | TMO | TT | 4.5 | 10 | 13.2 | | 13.2 | |
| | Latrine | TT | 6.0 | | 4.2 | | 4.2 | |
| | Vehicle Maint. | FSTFS | 18.5 | | 13.0 | | 13.0 | |
| | Packing/Crating | FSTFS | 12.0 | | 8.4 | | 8.4 | |
| W Wing Ops | Administration | TT | 5.7 | 10 | 14.0 | | 14.0 | |
| | Briefing | TT | 7.0 | 10 | 14.9 | 5 | 14.9 | |
| | Plans | TT | 4.5 | 10 | 13.2 | | 13.2 | |
| | Operations | TT | 4.6 | 10 | 13.2 | | 13.2 | |
| | Targets | TT | 4.5 | 10 | 13.2 | 3 | 13.2 | |
| | Intelligence | TT | 5.6 | 10 | 13.9 | 4 | 13.9 | |
| | Intelligence | ESC | 5.6 | 10 | 13.9 | 4 | 13.9 | |
| | Maint Command | TT | 4.5 | 10 | 13.2 | | 13.2 | |
| | Job Control | TT | 4.8 | 10 | 13.4 | 4 | 13.4 | |
| | Material Control | TT | 6.3 | 10 | 14.4 | 4 | 14.4 | |
| | Quality Control | TT | 6.3 | 10 | 14.4 | 4 | 14.4 | |
| | Maint Analysis | TT | 4.5 | 10 | 13.2 | | 13.2 | |
| | Maint Records | TT | 4.5 | 10 | 13.2 | | 13.2 | |
| | Maint Plans | TT | 6.3 | 10 | 14.4 | | 14.4 | |
| | Latrine | TT | 6.0 | | 4.2 | | 4.2 | |
| | Finance | TT | 4.5 | 10 | 13.2 | | 13.2 | |
| | Command Post | ESC | 7.0 | 10 | 14.9 | 4 | 14.9 | |
| | Command/Adm. | ESC | 5.7 | 10 | 14.0 | | 14.0 | |
| | RALS | | 7.2 | | 5.0 | | 5.0 | |
| X Medical Facility | See Specific Type of Facility Requirements | | * | * | | * | * | |

| Facility Group | Function | Shelter Type | Power Requirement (Kilovolt-Ampere [kVA]) | | | | kVA per Circuit | |
|---|---|---|---|---|---|---|---|---|
| | | | Max Load | AC Load | Div. | MEP Load | #1 | #2 |
| Y Commu-nications | See Specific Type of Facility Requirements | | * | * | | * | * | |
| Z Airfield Facilities | See Specific Type of Facility Requirements | | * | * | | * | * | |
| EW Water Plants | Per Specific Requirements | | * | * | | * | * | |

**Notes:** [1] Loads vary for deployed freezer units.
[2] Loads vary and may increase as new equipment comes into the inventory. To prevent generator overload, two generators may be required even when level of service is reduced and some equipment is isolated.

3.4.3. Bear in mind that the electrical loads shown for the various facilities are estimated in many cases. Oftentimes users bring additional or differing equipment that could alter these figures. If time permits, check to see what equipment is actually being supported, particularly in those areas related to flightline maintenance operations. Do not be surprised to see containerized facilities arrive; some organizations such as the hospital have these types of buildings for specialized functions. During your planning efforts it would be wise to save a couple of circuits from the SDCs for these specialized facilities, at least in the hospital and aircraft maintenance facility groups.

3.4.4. Pre-deployment discussions with aircraft maintenance, weapons, and medical personnel prior to deployment may reveal unit-unique power requirements greater than those normally supported by contingency electrical distribution systems. The facility diversity factor for each plant should be evaluated during operations by checking the average daily peak demand versus the total facility demand. A major difference from planned versus actual loads may justify rerouting electrical service to achieve greater efficiencies.

3.4.5. After the diversified loads are identified and excessive loads split between circuits, the next step is to identify how many of each facility type will

be included in each of the facility groups. This will enable you to develop a secondary distribution schedule for each group.

3.4.6. Example: **Table 3.2** lists the facilities available in a 3,300-person bed-down package. For this size package, a typical Wing Operations Group would be comprised of 25 temper tents and 3 expandable shelter containers. These would normally be configured for specific functions as listed under Facility Group **W – Wing Operations** in **Table 3.5**. Based on the number of facilities and their function, a secondary distribution schedule can be developed (**Table 3.6**) as a preliminary worksheet for determining the specific number of functions and facilities to be served within a group. The secondary distribution schedule can be used to brief commanders and control centers in order to determine if specific changes will be required before actually hard wiring the base. Using the suggested format in **Table 3.6**, and the information from the previous tables, the third column beneath the headings shows the number of facilities of the same type that will be included within a specific group. The fourth and fifth columns beneath the headings shows the specific diversified loads per circuit required to service each facility. The sixth column under the headings shows the estimated basic mission essential power required. The final line at the bottom of this worksheet provides a preliminary total power demand, which is determined by multiplying the number of facilities for each function by the kVA load for each function, and then adding all the products together. By dividing the results by the size of the SDC to be used, such as a 150 kVA SDC, you can determine the preliminary number of SDCs that may be required to support the group.

**Table 3.6. Example Wing Ops Group Secondary Distribution Schedule.**

| Wing Operations Function | Facility Type | # | kVA Circuit #1 | #2 | MEP kW |
|---|---|---|---|---|---|
| Administration | TT | 2 | 14.0 | | |
| Briefing | TT | 6 | 14.9 | | 4 |
| Plans | TT | 1 | 13.2 | | |
| Operations | TT | 3 | 13.2 | | |
| Targets | TT | 2 | 13.2 | | 2.4 |
| Intelligence | TT | 1 | 13.9 | | 3.2 |

| Wing Operations Function | Facility Type | # | kVA Circuit #1 | #2 | MEP kW |
|---|---|---|---|---|---|
| Intelligence | ESC | 1 | 13.9 | | 3.2 |
| Maint Supervision | TT | 2 | 13.2 | | |
| Job Control | TT | 1 | 13.4 | | 3.2 |
| Materiel Control | TT | 1 | 14.4 | | 3.2 |
| Quality Control | TT | 1 | 14.4 | | 3.2 |
| Maint Analysis | TT | 1 | 13.2 | | |
| Maint Records | TT | 1 | 13.2 | | |
| Maint Plans | TT | 1 | 14.4 | | |
| Finance | TT | 1 | 13.2 | | |
| Latrine | TT | 1 | 4.2 | | |
| Command Post | ESC | 1 | 14.0 | | 3.2 |
| Admin/Command | ESC | 1 | 14.0 | | |
| Total Loads (less RALS)<br>3 150 kVA SDCs required & a 30-kW gen | | | 379.2 | | 25.6 |

3.4.7. Environmental Control Unit (ECU). The ECU is a heat-pump-type air conditioner and heater that is widely used with most shelters and tents. When a beddown requires the use of ECUs, load planning factors for generators and the distribution system are greatly increased. The result is that a significant number of fewer facilities can be supported by each SDC when providing power to each facility's ECU.

3.4.8. After development of each group's secondary distribution schedule, group functional facilities by SDC as much as possible and arrange facilities to minimize the number of required emergency/back-up generators. Doing this will help ensure that emergency generators are properly loaded and decreases the manpower required for maintenance and operations. If possible, do this before site planners finalize facility locations in each group.

3.4.9. **Table 3.7** is an example of an SDC Feeder Schedule. It is based on the secondary distribution schedule for a Wing Operations Group at a 3,300-person base. The schedule expands on information from **Table 3.6** and identifies circuit designations for each SDC.

**Table 3.7. Example Wing Operations Group SDC Feeder Schedule.**

| Group | Circuit | Designator | Function | KVA | MEP kW |
|---|---|---|---|---|---|
| SDC-W1: Wing Operations | 1 | W1 | Briefing Facility | 14.9 | 4 |
| | 2 | W2 | Briefing Facility | 14.9 | 4 |
| | 3 | W3 | Briefing Facility | 14.9 | 4 |
| | 4 | W4 | Briefing Facility | 14.9 | 4 |
| | 5 | W5 | Briefing Facility | 14.9 | 4 |
| | 6 | W6 | Briefing Facility | 14.9 | 4 |
| | 7 | W7 | Targets | 13.2 | 2.4 |
| | 8 | W8 | Targets | 13.2 | 2.4 |
| | 9 | W9 | Intel | 13.9 | 3.2 |
| | 10 | W10 | Intel | 13.9 | 3.2 |
| | | | **TOTAL kVA** | **143.6** | |
| | | | **(Use 60-kW generator) TOTAL MEP kW** | | **35.2** |
| SDC-W2: Wing Operations | 1 | W11 | Job Control | 13.4 | 3.2 |
| | 2 | W12 | Material Control | 14.4 | 3.2 |
| | 3 | W13 | Quality Control | 14.4 | 3.2 |
| | 4 | W14 | Command Post | 14.0 | 3.2 |
| | 5 | W15 | Maint Supervision | 13.2 | |
| | 6 | W16 | Maint Supervision | 13.2 | |
| | 7 | W17 | Maint Analysis | 13.2 | |
| | 8 | W18 | Maint Records | 13.2 | |
| | 9 | W19 | Maint Plans | 14.4 | |
| | | | **TOTAL kVA** | **123.4** | |
| | | | **(Use 30-kW gen. or group w/another SDC) TOTAL MEP kW** | | **12.8** |
| SDC-W3: Wing Operations | 1 | W20 | Administration | 14.0 | |
| | 2 | W21 | Operations | 13.2 | |
| | 3 | W22 | Plans | 13.2 | |
| | 4 | W23 | Plans | 13.2 | |
| | 5 | W24 | Plans | 13.2 | |
| | 6 | W25 | Admin/Command | 14.0 | |
| | 7 | W26 | Finance | 13.2 | |
| | 8 | W27 | Administration | 14.0 | |
| | 9 | W28 | Latrine | 4.2 | |
| | | | **TOTAL kVA** | **112.2** | |
| | | | **Total MEP kW** | | **0** |
| | | | **TOTAL WING OPERATIONS GROUP kVA** | **379.2** | |
| | | | **Total MEP kW** | | **48** |

3.4.9.1. This specific example shows that all circuits were kept within the capacity of a 150 kVA SDC and that similar facilities/functions with mission essential power requirements grouped together on two SDCs.

3.4.9.2. The 35.2 kW mission essential power load for SDC-W1 could be supported with a 60-kW emergency/back-up generator. The 12.8 kW on SDC-W2 could be supported with a 30-kW emergency/back-up generator, or the facilities and SDC could be sited near another group so that both groups could be fed from the same SDC and 60 kW emergency/back-up generator.

3.4.10. The feeder schedule for each group should be used to develop a circuit schematic to list the required connections. While the surveyors are determining the rough layout of major facility groups, the circuit schematics can be annotated to show concerns for a specific layout. Identify the basic distances and locations for placement of SDCs next to the major facilities and the circuits requiring emergency/back-up generators for the initial operation of the base. Critical base facilities may have to operate from emergency/back-up generators, linked by SDCs, for up to two weeks while assets arrive and the main electrical distribution system is installed. The schematics can be used to show and explain how facilities are located in proximity to SDCs and emergency/back-up generators. They can also be used to flag the need for a emergency/back-up generator at critical facilities where a load on the generator would be so low that it should be shared with critical facilities in another group – thus affecting the siting within two groups. **Figure 3.13** depicts an example SDC Circuit for a Wing Operations Group at a 3,300-person expeditionary base.

**Figure 3.13. Example SDC Circuit for Wing Operations Group.**

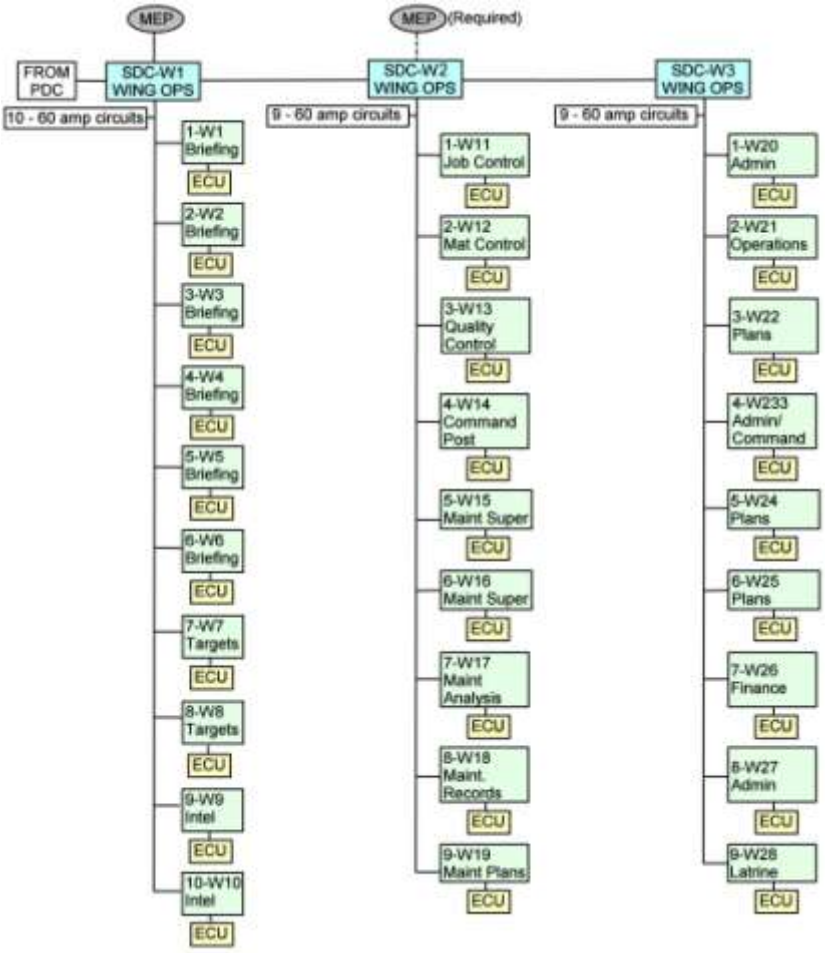


3.4.11. Phase Balancing. To operate a power plant or generator efficiently, the load on all three phases of the system must be nearly equal. The differ-

ence between phases should not exceed 10 percent; otherwise, generators will be out of balance and not provide full output. Also, voltage regulation will be poor, which can damage both generating equipment and equipment being powered. Even after all load factors are known and system schematics developed, the system might require further balancing (smaller MEP generators are especially vulnerable to this condition when connected to critical or isolated facilities). When laying out loads other than three-phase, take into account the total loading on each phase. Equally distribute the facility loads on an SDC by alternating which phase each facility is connected to on the PDP (e.g., facility W1 connected to 25-kW PDP connector J5 [phase C], W2 connected to J6 [phase B], W3 connected to J7 [phase A], etc.).

3.4.12. Radial versus Loop. Radial systems are normally used during initial stages of a deployment or for smaller austere bases (i.e., 1,100-persons) in a low threat environment. Otherwise, plan to use a loop system, as they provide more reliable power, better system grounding, and greater flexibility for handling everyday type power demands and maintenance outages. The #1/0 aluminum, 5,000-volt primary cable, and associated load break elbow connectors, are used to interconnect the power plants and provide both adequate insulation and mechanical integrity when buried to the proper depth. The cable's wrapped concentric neutral provides additional grounding potential and generally ensures that if damaged by weapons or equipment, a short circuit will occur at the point of contact, causing a fuse to blow at the PDC, or the circuit to open at the PSC, eliminating a lethal threat to personnel responding to repair the cable.

3.4.13. Power Plant Dispersal. Plan to construct multiple power plants in a high-threat environment (where facility dispersal is required) and for larger deployments (2,200-persons or more). Power plant dispersal does not require greater separation of equipment and controls within the plant. Protection of resources is provided through the use of revetments, barriers, concertina wire, CCD, and berms. Plants should be interconnected to ensure some degree of electrical generation capability is retained after an attack. For threat dispersal purposes, plants should be separated between 1,500 and 3,000 feet

from each other as part of a loop electrical distribution network. The primary method of looping is by interconnecting some PSCs/PDCs between plants.

**Warning**

Ensure interconnecting cables are marked properly and maps are updated to show interconnecting cables to ensure future rotations are aware of these cables.

3.4.13.1. To establish a looped system, a physical connection is made from the output bushings of one PSC/PDC to the input bushings of another.

3.4.13.1.1. In **Figure 3.14**, the energized cables of PSC/PDC A are connected to the input side of PSC/PDC B. Make sure that correct phasing is maintained and concentric grounds are properly connected.

**Figure 3.14. Typical Connection between Two PDCs.**

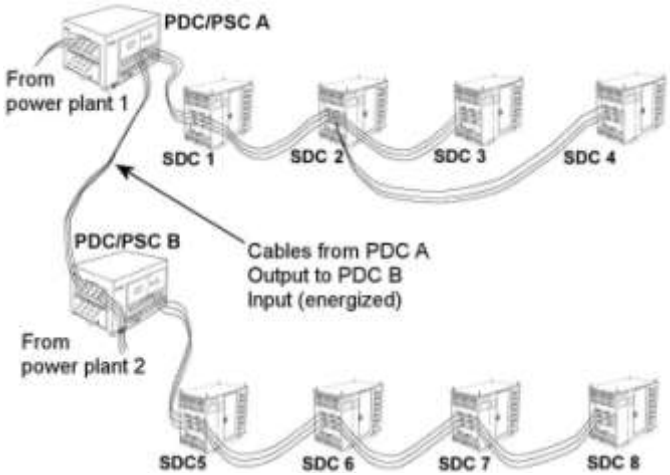

3.4.13.1.2. Larger beddowns may have two or three plants with more than one PDC. In this case, there are greater opportunities to loop between each separate plant and interconnect several PSCs/PDCs to form a complete ring between three or more plants.

3.4.13.2. Plants can also be interconnected through feeder circuit SDCs in an unenergized (parked) status.

3.4.13.2.1. In **Figure 3.15**, PSC/PDC A feeds SDCs 1, 2, 3, and 4 while PsC/PDC B feeds SDCs 5, 6, 7, and 8. The unenergized cables from SDC 1 to SDC 5 are placed on parking stands; next to a set of output bushings on SDC 1 and next to a set of input bushings on SDC 5.

**Figure 3.15. Parked Cables between Two SDCs on Different Circuits.**

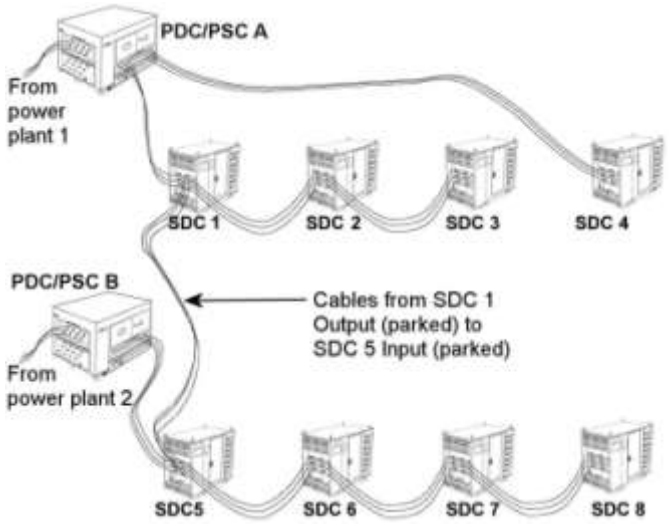


3.4.13.2.2. If the power plant serving PSC/PDC B, or PSC/PDC B itself, were put out of service, PSC/PDC B would be isolated. Then the cables between SDCs 1 and 5 would be removed from the parking stands and placed

on the respective output and input bushings to energize some of the SDCs served previously by PSC/PDC B.

3.4.13.2.3. If PSC/PDC A were put out of service instead of PSC/PDC B, reverse the SDC output and input bushing connections on the interconnecting cables for the two SDCs.

3.4.13.3. Overload Prevention. When rerouting PSC/PDC feeder circuits to power additional SDCs, care must be taken not to overload the circuit.

3.4.13.3.1. Additional cables may have to be run from SDCs on an operational PSC/PDC circuit to avoid overloads (**Figure 3.16**). Some of the SDC feeder circuits, which were previously on the inoperative PSC/PDC circuit, may also have to be rerouted.

**Figure 3.16. Rerouting Cables to Prevent PDC Overloading.**

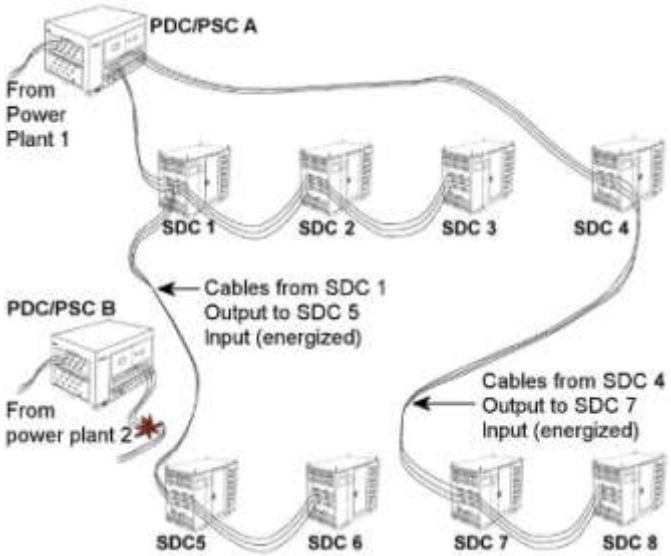

3.4.13.3.2. This would normally be done at the time of failure, but planning for alternate SDC to SDC connections should be considered when laying out the systems and utility corridors.

3.4.13.3.3. Always ensure correct phasing, concentric grounds properly connected, and rerouted circuits do not overload the PSC/PDC.

## Chapter 4

## INSTALLATION

**4.1. Safety Summary.** As noted in paragraph 1.1, electricians and maintenance personnel shall wear appropriate arc thermal performance value (ATPV) rated, as well as other appropriate, personal protective equipment in accordance with **AFI 32-1064** and **UFC 3-560-01** prior to working on or near energized electrical equipment or circuits. BCE or commander approval is needed prior to working on any energized circuits. The following paragraphs are recommended safety precautions that personnel must understand and apply during many phases of operation and maintenance of contingency electrical generation and distribution systems.

**Warning**

High voltage may cause severe shock or death upon contact. Use caution and avoid contact with energized components. Use a hot stick when handling loadbreak elbows.

**Warning**

Ensure loadbreak elbows are installed on parking stands at PSC/PDC and generator when performing maintenance to prevent possibility of utility power being fed back into equipment. Failure to comply may result in death by electrocution.

4.1.1. Only qualified individuals shall install, operate, and maintain the equipment described in this handbook. A qualified person is one who is trained and competent in:

4.1.1.1. The skills and techniques necessary to distinguish energized parts from non-energized parts of electronic and electrical equipment.

4.1.1.2. The skills and techniques necessary to determine the proper approach distances corresponding to the voltages to which the qualified person will be exposed.

4.1.1.3. The proper use of the special precautionary techniques, personal protective equipment, insulating and shielding materials, and insulated tools for working on or near exposed energized parts of electronic or electrical equipment.

4.1.2. Keep away from live circuits. Operators must at all times observe all safety regulations. Do not replace components or make adjustments inside the generator set with the high-voltage supply energized. Under certain conditions, dangerous potentials may exist when the generator is not operating and disconnected from the circuit due to charges retained by capacitors. To avoid casualties, always remove power and then discharge, ground, and test a circuit before touching.

4.1.3. High-Voltage Cable Connections and Disconnects. Always operate and connect generators, PSC/PDC, and SDCs in accordance with the applicable T.O.s. Only properly trained and qualified 3E0X1 Electrical Systems personnel should connect and disconnect this equipment.

**Warning**

Always make load break elbow connections in a de-energized state.

4.1.3.1. Disconnects should be made in an de-energized state, which is normally achieved by shutting down the power source to the PSC/PDC, removing the arc strangler switches (during an emergency disconnect—see below) on a PDC circuit, opening the load-interrupter switches on a PSC, or turning off circuit breakers on an SDC. De-energized cables and transformers should be grounded to prevent a shocking hazard from residual voltages.

4.1.3.2. During placement of the units (i.e., PDCs, PSCs, SDCs, and PDPs) and cable laying prior to bringing generators on line, **when it is known that electrical systems are de-energized**, some connections can be made using gloved hands. This can also be done for parking cables. However, use of a hot stick for placing the load break elbows on bushings is always a good safety practice to ensure proper seating of the load break elbows.

4.1.3.3. Safety and electrical equipment, including personal protective equipment (PPE), must be used when connecting and disconnecting load break elbows, opening PSC load-interrupter switches, arc strangler switches, and fusible switches.

4.1.4. Do not service or adjust alone. Under no circumstances should any person reach into or enter the housing for the purpose of servicing or adjusting the generator set except in the presence of someone who is capable of rendering aid.

4.1.5. Resuscitation. Personnel working with or near high voltages should be familiar with modern methods of resuscitation. Cardiopulmonary resuscitation procedures are contained in T.O. 31-1-141 and annual refresher training requirements are outlined in **AFOSH STD 91-10**. Such information may be obtained from base/post medical services.

**4.2. Personnel Responsibilities.** Multi-skilling of power production and electrical personnel is critical for installation and operation of contingency power generation and distribution systems. Neither power nor electrical specialties have sufficient numbers of personnel on standard mobility teams to accomplish all beddown and recovery tasks following traditional skill breakouts. Contingency training programs direct several training activities meant to enable engineer personnel to perform beyond traditional peacetime-related skill requirements. In the context of power plant and electrical distribution system installation and operation, **Table 4.1** highlights the responsibilities of power production and electrical personnel:

**Table 4.1. Task Responsibilities.**

| Task | Primary AFSC | Secondary AFSC |
|---|---|---|
| Set Up Power Plant | Power Production | Electrical |
| Operate Power Plant | Power Production | Electrical |
| Set Up Distribution System | Electrical | Power Production |
| Connect Tactical Generators | Power Production | Electrical |
| Install RALS | Electrical | Power Production |
| Phase/Parallel Generators | Power Production | Electrical |
| Install Grounding System | Electrical & Power | |
| Set Up Telescopic Light Set | Electrical & Power | |
| Construct Revetments | Electrical & Power | |
| Make/Break High Voltage Connections | Electrical | |

**4.3. Grounding.** Proper grounding of the electrical system is crucial for the safety of electrical power production and electrical system personnel. Procedures for grounding the deployable systems differ little from those used in standard electrical system installations. The grounding system for the contingency electrical generation and deployable system equipment consists of equipment grounds with ground rods at major components and the (grounded) concentric neutral wires throughout the high-voltage distribution portion of the system.

**Warning**

Do not energize equipment unless properly grounded. Electrical faults in generator set, load lines, or load equipment can cause injury or electrocution from contact with an ungrounded system.

4.3.1. **All equipment shall have a grounding resistance that does not exceed 25 ohms.** Test grounds IAW Chapter 10, Section III of **AFJMAN 32-1082, *Facilities Engineering – Electrical Exterior Facilities***.

4.3.2. Soil characteristics play a large part in the suitability of the grounding network. The type of soil, its chemical content, and the moisture level surrounding the ground rod will determine the resistance. Clay and loam soils with no rocks or stones will have a much lower resistance than clay or loam soils with many rocks or stones. Moisture content also affects resistance readings dramatically. As moisture content increases, soil resistivity decreases. This is especially true at the lower moisture content levels. Therefore, much of the dry, rocky, or sandy soils in SWA cannot provide the required soil resistivity of 25 ohms or less using just the driven ground rods provided with each unit.

4.3.3. For proper grounding, you must have a ground rod that will be in contact with moist soil. Use as many ground rods as required to obtain adequate resistance readings. If deployed to a location where a ground rod cannot be driven deep enough to reach low resistance soil, or if ground rods are in short supply, then alternate-grounding methods must be used. A horizontal ground rod installation (**Figure 4.1**), buried metal well pipes, metal plate electrodes, or a laced wire grounding installation (**Figure 4.2**) can be used to obtain the adequate resistance reading. Dig a trench as deep as feasible to reach wet soil or soil that can be moistened with water or brine. Lace a copper wire up and down the bottom of the trench. To keep resistance readings low under extremely adverse soil conditions, you may have to continuously keep the grounding area damp using water or salt water/ROWPU brine solutions. Thoroughly compact the soil when backfilling the trench to maximize soil contact with the wire or rods.

**Figure 4.1. Typical Equipment Horizontal Ground Rod Installation.**

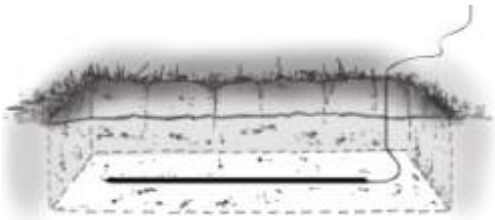

**Figure 4.2. Typical Equipment Laced Wire Grounding Installation.**

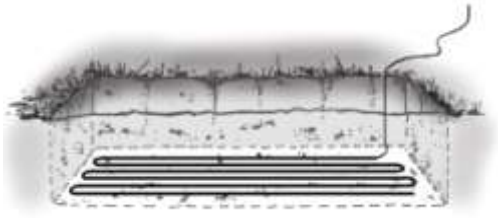

4.3.4. For longer deployments, installation of a grounding grid (**Figure 4.3**) under each equipment item (i.e., generator, PSC/PDC, SDC, etc.) should be considered both for additional safety and reliability. Each equipment item should have its own equipment ground and rely on the concentric neutral wires within the three connecting high-voltage cables to provide continuity for both electrostatic and system grounding.

**Figure 4.3. Typical Equipment Grounding Grid Platform Installation.**

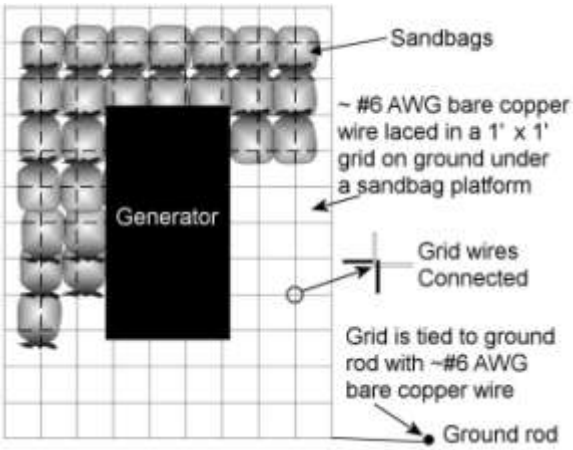


4.3.5. If deployed to a location in a climatic zone where the ground freezes, be sure to lay the horizontal grounding system below the frost line, as resis-

tivity readings can increase substantially for frozen ground. Also, frost heaves that occur in soil with different moisture contents may cause equipment to tilt or move if the buried horizontal rod or wire system is located too close to the equipment. Keep the disturbed, moistened soil of the buried grounding system at least 10 feet from the supported equipment. The grounding system should normally be within 15 feet of the supported equipment; this is not a hard and fast rule and is dictated more so by the available area and materials and the ability to obtain and maintain adequate resistance readings. For driven ground rods, recheck the resistance readings regularly throughout the deployment.

**4.4. DPDGS High-Voltage Component Installation.**

4.4.1. MEP-12A. See **Chapter 5** for power plant equipment installation procedures.

4.4.2. Primary Switch Center. See **Chapter 5** for power plant equipment installation procedures.

4.4.3. Secondary Distribution Center (SDC).

4.4.3.1. Site Preparation. Use the following general guidelines for installation site preparation.

4.4.3.1.1. The installation site should be a relatively level surface capable of bearing the weight of the SDC. The area surrounding the SDC should have enough slope to allow for drainage; limit ground slope to about 1% unless faster drainage is required.

4.4.3.1.2. Clear the site of brush, large rocks, and other items that might interfere with the operation, maintenance, access to, door openings to provide clearance for use of hot sticks, or stability of the unit.

4.4.3.1.3. Ensure there is unobstructed airflow to the outside vents to allow cooling of the transformer. Clear the area within 6 feet above and 10 feet on the sides of the unit.

4.4.3.1.4. If possible, make use of terrain features to minimize the heat loads on the SDC by placing the unit in shady areas.

4.4.3.1.5. Ensure cables are trenched for protection and safe operation.

4.4.3.2. Grounding.

4.4.3.2.1. One ground rod (in two 4-foot sections) and six feet of bare, stranded copper wire is shipped with each SDC. The ground rod is stored in the high-voltage compartment door.

4.4.3.2.2. Remove ground rod from high-voltage compartment door and drive within 5 feet of high-voltage side of SDC (**Figure 4.4**).

**Figure 4.4. SDC Ground Rod Assembly.**

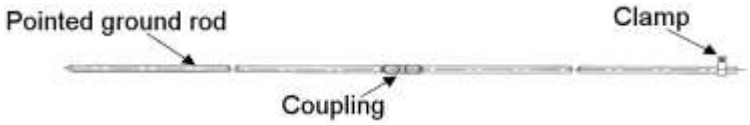


4.4.3.2.3. Locate the section that has threads on one end and is pointed on the other. Attach the other section to the first with a coupling. Drive the assembly into the ground, pointed end first, until approximately four to six inches is left above the ground.

4.4.3.2.4. Attach the copper wire to the exposed end of the ground rod by securing the wire with the ground rod clamp provided.

4.4.3.2.5. Test for ground resistance IAW Chapter 10, Section III of **AFJMAN 32-1082**.

4.4.3.2.6. Attach the loose end of the ground wire by feeding through the opening at the bottom of the high voltage compartment (**Figure 4.5**) to a ground bus connection located at the bottom left side on the front face of the primary mounting panel.

**Figure 4.5. Grounding Location on the SDC.**

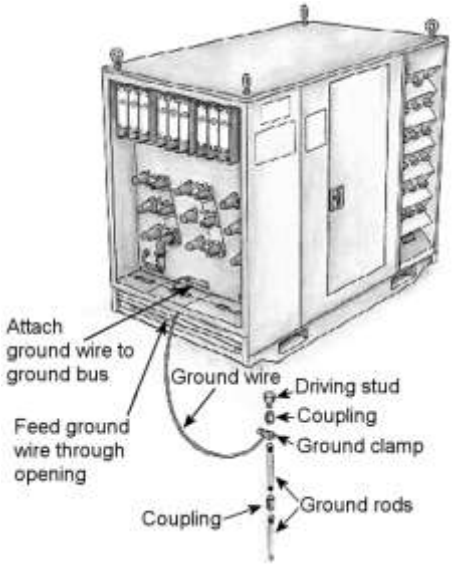


**4.5. HARVEST Series High-Voltage Component Installation.**

4.5.1. MEP-12A. See **Chapter 5** for MEP-12A installation procedures.

4.5.2. PDC. See **Chapter 5** for PDC installation procedures.

4.5.3. SDC. The Harvest Falcon SDC is installed in the same manner as the DPGDS SDC. Use the procedures in **paragraph 4.4.3**.

**4.6. Laying Out High-Voltage Cable.** High-voltage, primary power is distributed on #1/0 aluminum, 5,000-volt, cross-linked polyethylene cable with wrapped concentric ground wires (**Figure 4.6**). It is of the optimum size for load requirements and provides both adequate insulation and mechanical integrity when buried to the proper depth. The drain wires in the cable jacket generally ensures that if personnel hit the cable with digging devices, a short circuit will occur at the point of contact, blowing a fuse at the PDC and hopefully avoiding injury to personnel.

**Figure 4.6. Primary Cable Cross-section.**

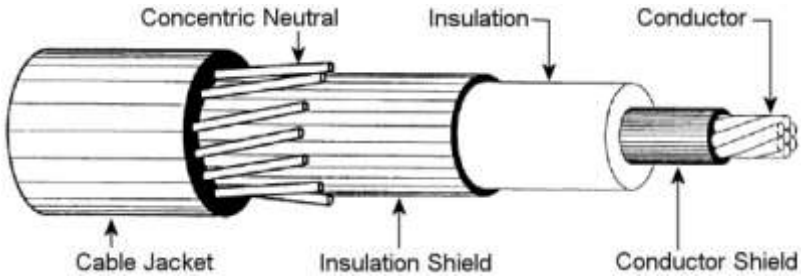


4.6.1. Mark the high-voltage cables according to phase and secure the free cable ends to some solid object at or near the power source. Leave a service loop to connect to the output terminals of the power source.

4.6.2. Load the cable reel pallet assembly on a forklift or suitable truck and move the vehicle slowly along the predetermined cable route allowing the cable to pay out freely. When nearing the end of the cable path, decelerate slowly to minimize cable reel spin.

**Warning**

Excessive speed of cable-laying vehicle can cause cable reels to keep spinning after vehicle stops. Attempting to stop reels can cause serious injury to personnel.

4.6.3. Cut cabling to length and mark the end of the cables according to phase.

**Note:** To permit the flexible movement of the feeder cables between the PDC online bushings and the parking stands once the cables are entrenched, it is imperative that all cable entrenchments approach the PDC parallel to the side where cables are connected (**Figure 5.21**).

**4.7. Trenching.** During the initial layout and early operation, the electrical distribution network is an above ground system. When time permits, bury the primary distribution electrical lines in trenches about 18-inches deep.

4.7.1. The trenches should be wide enough to provide a 6-inch separation between cables. Cables should not be laid directly on sharp rocks or in very rocky soil; where such rocks are present, place a layer of sand or other soil free of sharp rocks on the bottom of the trench. If the soil is very rocky and the area will be trafficked, then a layer of sand or rock free soil may be also be required above the cables.

4.7.2. At locations where cables cross roadways and in high-traffic areas, the lines should be buried even in the initial phases of the operation. Consideration should be given to running the lines in conduit under roadways and burying the cables deeper to allow improving roads over these cables with gravel or hard surface. Secondary distribution lines for service from SDCs should also be buried (when time permits) in shallower trenches. Under most climactic conditions, secondary distribution lines require only 8 inches of cover, except for the following conditions:

4.7.2.1. For **desert conditions**, heat will degrade both primary and secondary cable; **ensure that the cable has at least 12 to 16 inches of cover.**

4.7.2.2. In areas subject to ground freezing, bury cables below the frost line.

4.7.2.3. In locations which may experience numerous freeze-thaw cycles throughout the winter (where there is intermittent flooding and ground

movement), buried cannon plug cable connections may require some waterproofing protection (i.e., wrap in plastic sheeting and tape) or be surrounded with free draining sandy gravel. If winterizing procedures are required for the deployment, marking or otherwise identifying buried cannon plug connections at critical facilities will allow them to be checked if freeze-thaw cycles cause problems with electrical connections.

4.7.3. Most trenching is accomplished using a tractor with backhoe and blade. The attachments are removable and/or interchangeable. Upon arrival at the deployment location, the Civil Engineer's tractor may arrive configured with or without a rotary-trenching wheel (**Figure 4.7**), which is normally associated with Communication's configuration of the tractor. If the equipment arrives with the rotary-trencher, the rotary-trencher may be removed or used by Civil Engineers for burying secondary or primary distribution cables. Expect to have some handwork when burying cable near generators, PSCs/PDCs, and SDCs.

**Figure 4.7. Tractor with Backhoe, Blade, and Trenching Wheel.**

4.7.4. It is especially critical to maintain the 6-inch separation (**Figure 4.8**) for primary power cables and to keep the cable from bundling together in the trench for facilities that require more reliable power and for interconnecting power plants. If a rotary-trencher is used, maintaining adequate separation will be difficult due to the narrow width of the trench. Field conditions may dictate various installation choices, which can be used to maintain a 6-inch

separation and also meet required cover and protection, such as multiple trenches with a wheel cutter trencher, wider trenches, and/or deeper trenches and cable laid with horizontal and a vertical separation between cables.

**Figure 4.8. Trench and Cable Detail.**

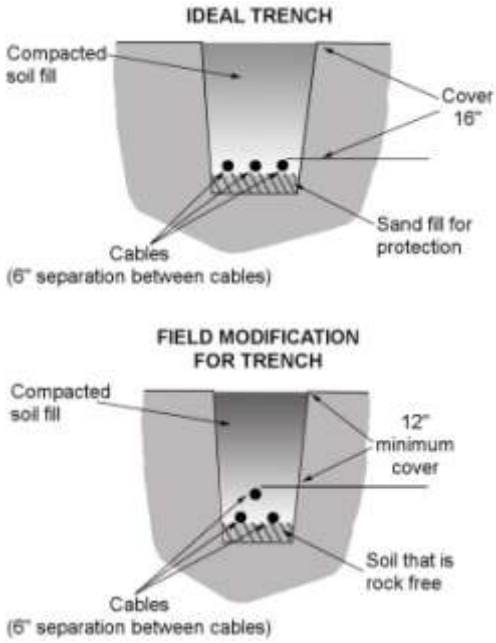


4.7.5. In the immediate power plant area, make sure the trenches are clearly marked to ensure that future additional trenching operations will not hit buried power cables. Plan ahead, especially when multiple power plants are used, to provide access for routing of cables between plants. In some cases it may be feasible to bury several sets of power lines in wider and deeper trenches (**Figure 4.9**) to accommodate base growth and/or expansion of the power plant.

**Figure 4.9. Multiple Cable Runs in Common Trench.**

4.7.6. Keep accurate, up-to-date records on the location of power lines and when possible, mark the cable routes. Cable routes between plants can be relatively long, traversing much of the camp area. During long-term deployments, trenches can become overgrown or covered by blowing sand. If they do not have accurate records, follow-on units can easily disrupt electrical and other utilities when trenching to expand or repair/replace systems.

4.7.7. When burying cable, be sure to label SDCs with feeder and SDC numbers. These numbers should accurately match the as-built drawings for troubleshooting and safety purposes. When time permits, label the cable to show where it feeds and from where it is fed (**Figure 4.10**).

**4.8. Fabrication for Load Break Elbows.** Cables are cut to length in the field and load break elbows are used as connectors. Load break elbow assemblies vary based on the model used. Follow appropriate technical orders or manufacturer's installation instructions if available. If specific model instructions are not available, see **Attachment 2** for general instructions.

**4.9. Cable Connections from Generators to PSC/PDC.** After laying out and locating equipment for the power plant(s), fabricate all three phases of cable connections between the generators and the PSC/PDC. Ensure 3 to 4 feet of concentric ground wire is available for each cable. Verify that cabling at and between the generator and the load is in serviceable condition, protected from vehicle traffic or other possible sources of damage, and that the

cable phasing is maintained. See **Chapter 5** for detailed cable connections between generators and PSC/PDC.

**Figure 4.10. Feeder Circuits Labeled.**

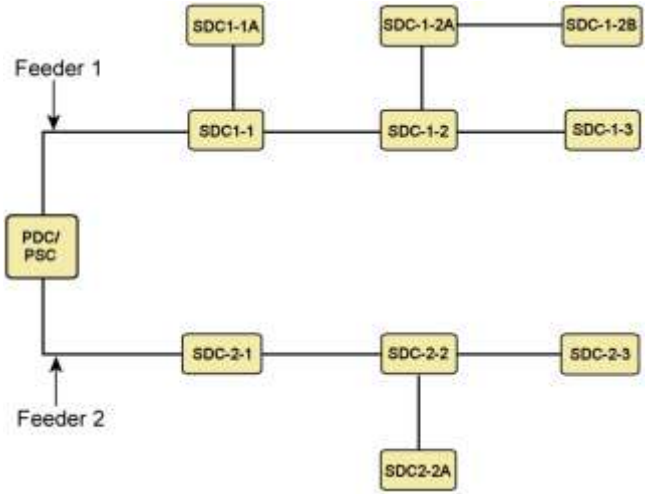


**Warning**

Ensure all power is removed from the primary power cables before attempting to attach or detach the loadbreak elbows. Disconnect cables at source if not already disconnected. Lethal voltages may be present.

**Warning**

Do not apply primary power to the SDC until all post-installation checks have been satisfactorily completed.

**Warning**

Pulling the center electric fusible disconnect (EFD) will not de-energize any cable interconnecting SDCs in the circuit. This will only de-energize the transformer on the SDC from which the EFD was removed.

**Warning**

Failure to observe the warnings above may result in danger to operating personnel and/or serious damage to the equipment.

**4.10. Connections from SDCs to PSC/PDC.**

4.10.1. A single SDC can accept a three-wire high-voltage input from a generator, PDC, PSC, or another SDC. The high-voltage cables are connected to an SDC with load break elbows. This is always the case whether the cables are coming from a PDC, PSC, generator, or from another SDC. Load break elbows are connected and disconnected using a Grip-All Clamp Stick. **Disconnects must be made in a de-energized state.**

4.10.2. The input side of the SDC has three switches, each of which has three poles; each center pole is an EFD switch (**Figure 4.11**). **With each center poll removed**, the SDC will not provide power to the low-voltage output circuits, but will **still transfer (through the high-voltage bus) high-voltage power to any other SDCs** connected through the output bushings (**Note**: When laying out and connecting the system, the EFD center poles for each SDC should be removed until all the individual SDC circuits are to be energized). The center poles are connected/disconnected with a switch stick (**Figure 4.12**). The outer poles may also be removed, but must be reinstalled before the system is energized**. Do not attempt to make an energized connection of the outer poles.**

**Figure 4.11. Detail of Electric Fusible Disconnect (EFD).**

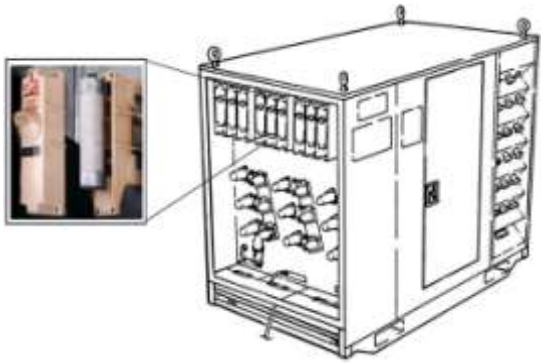

**Figure 4.12. Disconnecting EFD Center Pole with a Switch Stick.**

4.10.3. When facing the high-voltage end of the SDC, the commonly used input connection bushings are on the left side of the panel face. For initial installation, pull the ends of the primary cables through the floor opening into the high-voltage compartment. Install the load break elbows in accordance with manufacturer's instructions and place on the respective phase parking stand. Connect the concentric neutral wires from each cable to the lug terminals on the ground bus plates at the bottom of the panel face (**Figure 4.13**).

**Figure 4.13. SDC Input Ground Connection.**

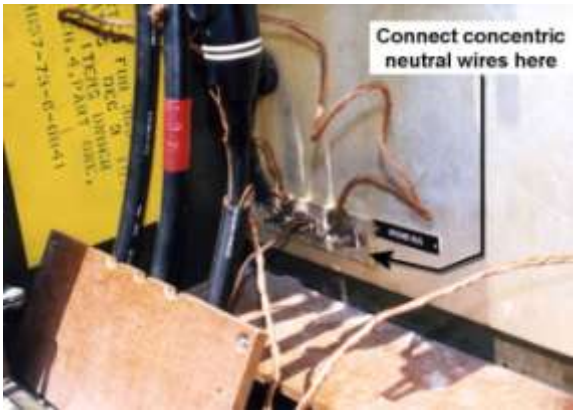


4.10.4. Before connecting the cables to the SDC, remove the center pole of each of the three EFD switches by sliding it out of the EFD switch using a hot stick. This isolates the SDC transformers from an incoming power source, **which affects only the low-voltage power outputs**. Verify that correct fuses are in the center pole of each of the three input EFD units of the SDC and that all fuses are firmly in place in the fuse clips. Leave the center pole sections of the EFD units out until after circuit checkout.

4.10.5. Remove red loadbreak protective shipping caps on input connectors for later use. Clean connectors with a rag.

**Caution**

While bushings come with ID markings as input connections and have proper phase identified on adjacent nameplates, some markings and/or nameplates may become illegible from wear. Ensure all operators are fully knowledgeable of equipment functions and features when making connections.

4.10.6. Lightly coat the bushing well insert and loadbreak elbow with dielectric silicone grease and connect cables from high-voltage sources to the bushing well inserts on the high-voltage side of the SDC (**Figure 4.14**) ensuring no phase cross-connections.

**Figure 4.14. Cables Connected to Input Bushings.**

4.10.7. Cover unused SDC bushing well connectors with 15kV **protective insulated caps prior to energizing**.

4.10.8. See **paragraph 5.8.3.2** to connect wires to PDC output connectors.

4.10.9. Once connections are made on the load side of the SDC and post-installation checks are completed, the EFD center poles can be reinstalled.

4.10.10. Additional SDCs may be interconnected to an SDC connected directly to the primary power source. To interconnect SDCs, layout primary cable between the SDCs to be interconnected and connect the concentric grounds to the ground buses. Connect the load break connectors of the additional SDC to the bushing wells marked INPUT CONNECTOR ØA, ØB, and ØC. Then install load break connectors in the bushing wells marked OUTPUT CONNECTOR ØA, ØB, and ØC in the SDC connected to the primary power source. Using this interconnection plan, each SDC can deliver primary power to two additional SDCs (**Figure 4.15**).

**Figure 4.15. SDC Input and Output Cables.**

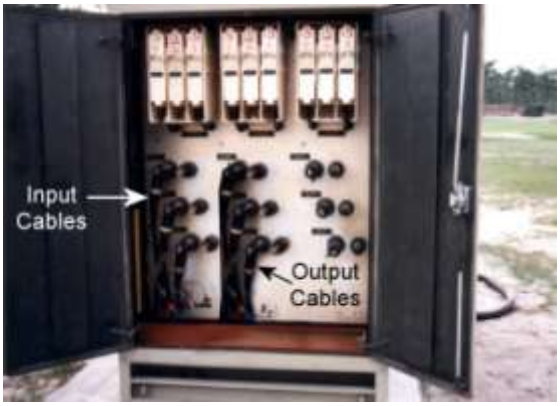


4.10.11. Make sure proper phase order is maintained for all equipment connections in the system and concentric ground wires are connected at both ends of all PDC-to-SDC and SDC-to-SDC cabling. After the SDCs have been installed on a PDC circuit, the system circuit can be energized.

4.10.12. As mentioned in **paragraph 2.2.5.1**, when only one MEP-12A is required for a limited area and there is no available PDC, several SDCs may be branch-connected together to sufficiently distribute high-voltage power (**Figure 4.16**). Theoretically, five SDCs can be connected in this manner to distribute high-voltage power; however, such an installation will provide a lower degree of safety for the generator than with the use of a PDC.

**Caution**

Standard SDC configuration with EFDs only in center pole position does not provide overcurrent protection back to the generator.

**Figure 4.16. Branch Connected SDCs with a MEP-12A Generator.**

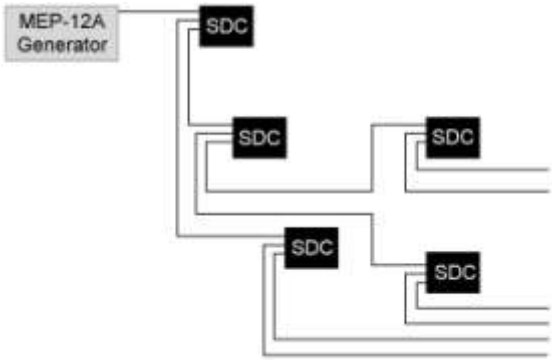


4.10.13. Managing loads coming from such an SDC branched distribution system should be done only by experienced personnel who are qualified to make PDC connects and disconnects, as the overall branched system will be functioning as a PDC. Unlike the PDC, which has fuses and disconnect switches, the SDC has only outer switch poles, which can be removed. **However, there is no recommended procedure to allow high-voltage, emergency energized disconnects for the SDC.** This secondary (load) system is intended to be de-energized before pulling outer poles with a hot stick.

> **Warning**
>
> Do not connect secondary cable assemblies to SDC output receptacles until installation of entire system and completion of post installation checks. Powered cables represent a shock hazard to installing personnel.

**4.11. Connections from SDCs to PDPs and Service Panels.** Individual feeder circuits from the SDCs are run from feeder receptacles (using cannon plugs) along 50-foot and 100-foot cables. They connect to either facility power distribution panels (PDP) (**Figure 4.17**), shelter electrical service pa-

nels (**Figure 4.18**), or specific equipment items with compatible cannon plug connections (example, ECUs and RALs). Power may also be run to an ECU from the served PDP (**Figure 4.19**) or shelter electrical service panel. **Note**: Be sure to start with plug (male) end of cable assembly at the SDC, and leave enough cable at the SDC to permit insertion into output receptacle.

**Figure 4.17. Connection from SDC to Small Shelter System PDP.**

**Figure 4.18. Cannon Plug Connection from SDC to ESC Service Panel.**

**Figure 4.19. Connection from PDP to ECU.**

**Warning**

Coiled secondary cables are heavy. Get help when necessary and lift carefully by bending at the knees to prevent injury.

**Caution**

Cable runs over 400 feet may exceed max allowable voltage drop. Ensure that voltage at load does not drop below 10% of original voltage.

**Caution**

When making short cable runs with a long cable, DO NOT coil energized excess cable. Magnetic lines of flux across the coils will cause the cable to heat up and burn.

4.11.1. Some PDPs, shelter service panels, and/or ECUs **may not** have a cannon plug receptacle. In those cases, hard wire the service connection from the SDC.

4.11.2. Be aware that the PDPs also have external ground lugs on their frames for grounding of the units. In desert locations, it may not be possible to provide an adequate ground for every small facility PDP due to the soil conditions. However, larger PDPs such as the 60 kW, 100 kW, and 200 kW units that serve as major distribution centers for large facilities, several facilities, or facilities with numerous major equipment items, must have a separate ground at each PDP. This is especially important in climate areas with high-moisture levels.

4.11.3. If the larger PDPs are connected to a smaller MEP generator, which must be hard-wired, then the generator input connection on larger PDPs may also have to be hard wired. Check the manufacturer's model and T.O. for any safety cautions or warnings that may be applicable for the unit.

4.11.4. The secondary cables for low-voltage power from the PDPs are connected with NEMA type twist-lock plugs to individual facility distribution and lighting strips.

4.11.5. **Do not** make an energized low-voltage connection with cannon plugs when connecting a cable to an SDC, a cable to a cable, a cable to a PDP, or a facility service panel connection. Before making a connection, **turn off power to the cables at the individual branch circuit breakers of the SDC**. Check to ensure that individual circuit breakers for facilities and PDPs are also off during connections from SDCs to PDPs or facility panels. This will prevent surging on a circuit, and will ensure that if there is a problem with any one circuit coming out of a service type panel, the problem can be more quickly identified.

**4.12. Mission Essential Power.** If it is necessary to provide power to mission essential loads before the prime power grid is energized, and/or emergency power after the grid is energized, install the emergency/back-up cable

assemblies at this point. Each SDC can be connected to an emergency/back-up generator.

4.12.1. Set up the emergency/back-up generator near the SDC and connect the mission essential loads to the secondary output connectors on the SDC (**Figure 4.20**). Ensure all SDC output circuit breakers are OFF.

> **Warning**
>
> Do not energize the emergency/back-up generators until post-installation checks have been made (mission essential mode) for the SDC, the secondary cable assemblies to the affected loads, and the loads themselves. Failure to complete post-installation checks may result in danger to installing personnel.

**Figure 4.20. SDC Secondary Connection Panel and Circuit Breakers.**

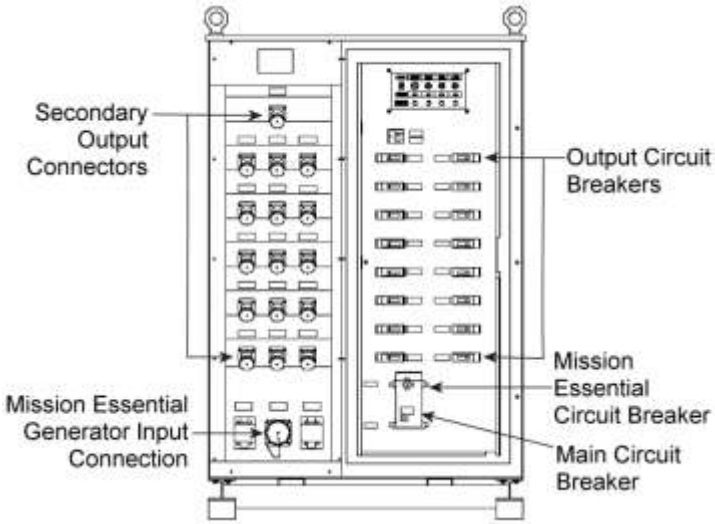

4.12.2. Connect the generator cable assembly to the emergency/back-up generator and SDC and perform post-installation checks necessary to ensure safe operation of equipment in the mission essential mode.

# Chapter 5

## POWER PLANT INSTALLATION

**5.1. Introduction.** Using the planning factors in **Chapter 3**, set up and layout the power plant. Adhere to the safety requirements in **Chapter 4** when setting up the power plant. In laying out the system, your primary concern will be supplying electric energy at voltages necessary to operate the end user's equipment. Electric power from host nation sources is used if available, unless inadequate or subject to frequent interruption. On deployments where it is not possible to connect to host nation commercial sources, Mobile Electric Power (MEP) generators are used.

**5.2. Site Selection.** When selecting a location to set up a power plant, consider factors such as topography, noise, and vehicle access.

5.2.1. Topography. The general location of the primary power plant is determined by facility planners (primarily engineer officers and engineering personnel) with input from electrical and power production personnel. If dispersed plant operation is called for, all plant locations will be identified. With general locations decided, specific sites can then be picked out by on-the-ground physical inspection. In determining the specific sites consider the following:

5.2.1.1. Ensure the area is large enough to accommodate all equipment assets (e.g., generators, fuel bladders, berms, PSC/PDC, operator's shelter, etc.).

5.2.1.2. Plan for security fencing around plant perimeter (e.g., concertina wire).

5.2.1.3. Look for relatively level land to minimize site preparation.

5.2.1.4. Plan to prepare extremely level ground for fuel bladders and PSC/PDC locations.

5.2.1.5. Check area for reasonable flooding and drainage patterns.

5.2.1.6. Ensure drainage ditches, swales, or irregular terrain does not inhibit access to site.

5.2.1.7. If possible, allow trees on site to provide shade and some camouflage, but not block airflow.

5.2.1.8. To minimize blowing dust and dirt, leave low ground cover undisturbed to the greatest extent possible

5.2.2. Noise Considerations. Site selection includes consideration of noise generated by power plants. Planners normally take this into account by distancing power plants as far as possible from cantonment and administrative type areas. In addition to distance, the use of tree lines and natural ground contours between power plants and highly populated areas can reduce noise interference. In barren regions, manmade revetments and baffles may also be used as noise barriers. Lastly, when practicable, situate plants downwind of high-use areas to use the prevailing winds to reduce the noise factor.

5.2.3. Vehicle Access. Of critical importance to primary power plant operation is vehicle access, particularly for larger trucks and heavy equipment. Once a plant is established, large vehicles will still require access for delivery of operating supplies, repair parts, and fuel.

5.2.3.1. Sufficient space should be allowed to enable removal of an entire generator unit for depot level repair without uninstalling plant equipment or moving assets around.

5.2.3.2. Burial of electrical cables may be desired at a later time—it is much easier to bring in a trenching machine than hand-digging hundreds of feet of trench in desert hardpan or rock filled frozen earth. Leave space for trenching equipment when future trenching in plant area is anticipated.

5.2.3.3. If an extended contingency operation appears probable, it is advisable to build hard surface vehicle access ways at least to the refueling points. If blacktop roads are not possible, go with soil-cement or gravel.

5.2.3.4. Be sure to consider fire-fighting access. Coordinate with the base fire chief to determine realistic space requirements; different bases have different fire fighting vehicle sets. As a minimum, plan your plant layout to allow complete accessibility to its entire perimeter.

**5.3. Equipment Layout.** Although the same basic equipment is used in all Air Force contingency power plants, there are many possible equipment layout configurations. These configurations are influenced by two basic factors—the size of the base population (determines quantities of assets received) and whether dispersed or non-dispersed operations are required (dictates number of plants to set up). Within these configurations, there is no mandatory way to layout individual equipment items. Land area available, vehicle access needs, available lengths of cable and piping, and, to some extent, operational requirements will drive individual equipment item layout.

5.3.1. Power Plant Configurations. The following paragraphs describe the operating scenarios, plant configurations, and the number of PSCs and PDCs required for safe operation.

5.3.1.1. Power Plant Layout with PSC. One-, two-, and three-unit plants are typically configured with one PSC. A four-unit plant requires the use of two PSCs for safe isolation. See T.O. 35F14-1-1 for proper PSC relay settings.

5.3.1.1.1. Two-Unit Plant. **Figure 5.1** illustrates a two-unit plant configuration with a PSC and identifies the connections required to establish a common power bus. Disregard unit two in the figure if setting up a one-unit plant.

5.3.1.1.2. Three-Unit Plant. **Figure 5.2** illustrates the layout and connections for a three-unit configuration.

**Figure 5.1. Two-Unit Plant with PSC Configuration.**

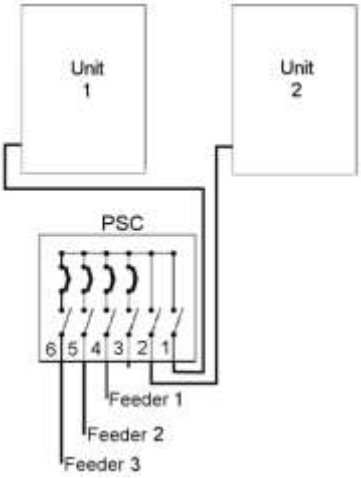


**Figure 5.2. Three-unit Plant w/PSC Configuration.**

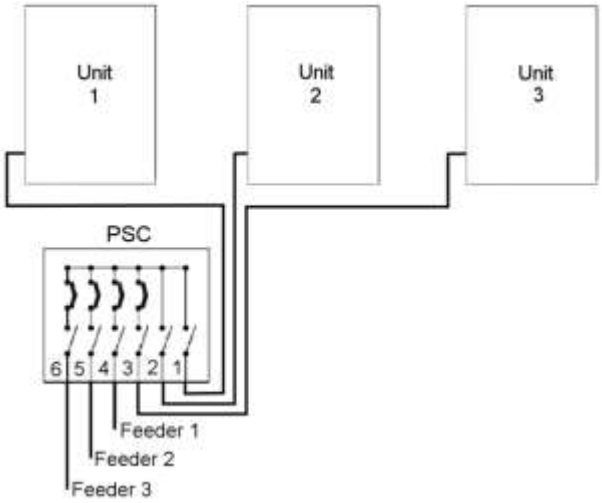

5.3.1.1.3. Four-Unit Plant. A four unit plant configuration requires the use of two PSCs. **Figure 5.3** illustrates the connections for this configuration. The PSCs are interconnected by 15KV 4/0 AWG, 600 amp Deadbreak, 35 feet long cable assemblies that ship with the PSC. In addition, the adjustable fault interruptors for Way-6 on both PSCs are programmed for 400 minimum pickup amps. **Note**: A loadbreak connector is designed to close or interrupt current on energized circuits. A deadbreak connector is designed to be separated and engaged on de-energized circuits only.

**Figure 5.3. Four-unit Plant w/PSC Configuration.**

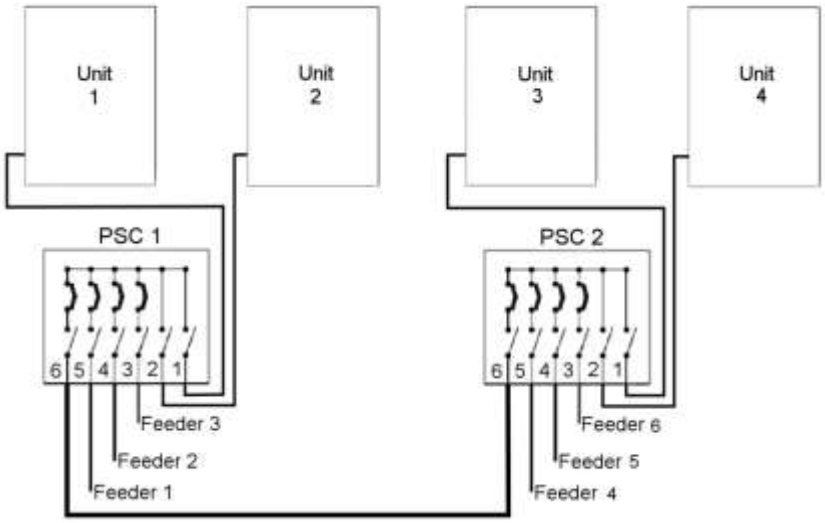


5.3.1.2. Power Plant Layout with PDCs. MEP-12 units may be configured as a one-, two-, three-, or four-unit plant with one PDC. The typical four-unit configuration with PDCs are shown in **Figure 5.4**. If setting up a plant with less than four units, eliminate the number of units as necessary in the figure starting with unit 4. When only one MEP-12A is required to provide power to a limited area, the SDC may be used without a PDC to distribute power from a MEP-12A through cables and load break elbows to other SDCs and

users' power distribution panels (see **paragraph 4.10.12**). **Figure 5.5** illustrates the typical MEP-12A power plant layouts by base population.

**Figure 5.4. Four-Unit Plant w/PDC Configuration.**

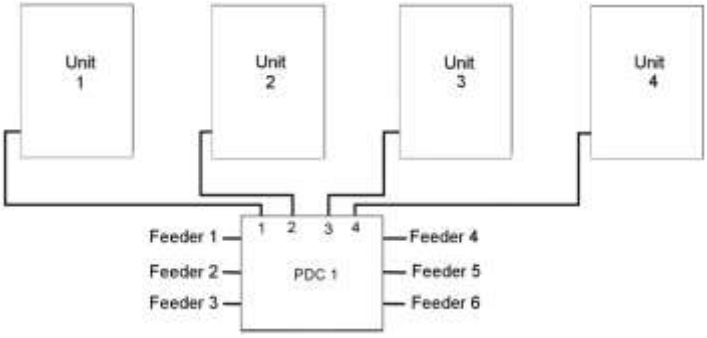


**Figure 5.5. General Plant Configurations w/PDCs by Population.**

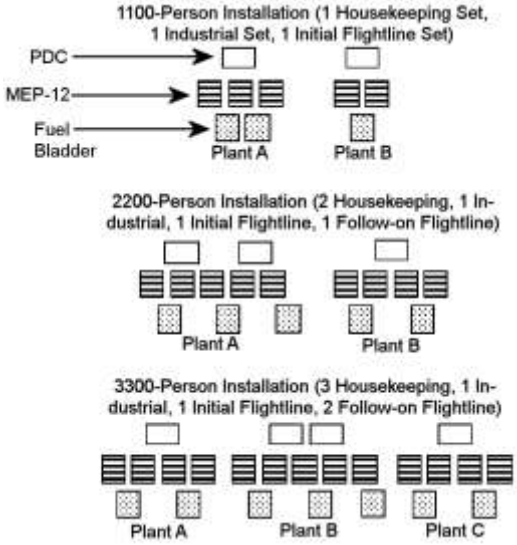

**5.4. Generator Installation.** Install generator on level ground with a minimum slope for drainage, usually not to exceed 1%.

> **Caution**
> Fuel spillage can occur if the generator tilts more than ± 2 degrees.

5.4.1. Positioning. Typically, MEP-12As are lined up parallel with each other and at least 20 feet apart. Generators must have a minimum clearance of 10 feet between units. They may be spaced wider apart to allow for additional cooling, especially if prevailing winds have a range of directions. Up to 20 feet is used to allow for a range of wind directions. However, the wider the units are spaced, the harder it is to keep them within the required 80 feet of the PDC.

5.4.1.1. As is shown in **Figure 5.6**, the radiator-end of the generators are positioned downwind of the prevailing winds, which aids in cooling by blowing along the long axis of the generators. However, in extremely dusty climates, the units can be oriented with the radiators toward the prevailing winds to allow the radiator fan exhaust to blow the drifting dust away from the radiators.

**Figure 5.6. Generators Positioned with Radiators Downwind.**

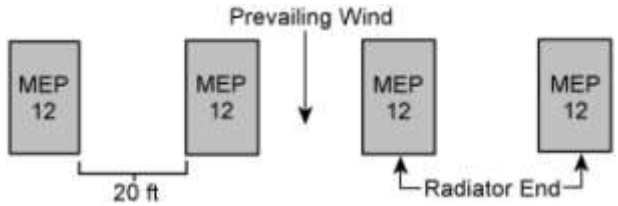


5.4.1.2. For long duration deployments in hot regions, consider building sunshades over the generator sets to reduce solar heat buildup. Maintain at least a 2-foot clearance between the sunshade and the mufflers mounted on top of the generator.

5.4.2. Grounding. The MEP-12A is grounded at the front right (facing the tow bar) corner of the unit at the ground stud (**Figure 5.7**). Connection to a ground rod is made using either a #2 or #4 AWG copper wire. A second ground lug is located at the power panel, which is tied into the current transformer and ground fault relay. While it is possible to connect the ground rod wire to this terminal, normal practice is to connect to the front ground stud to allow inspection of the ground connection. Both studs are bonded together with a grounding cable. **Note: Do not bond the ground rods of separate generators together and do not ground them to a central ground.**

**Figure 5.7. Ground Stud on MEP-12A Generator.**

**5.5. Establish Fuel Storage/Manifold System.** The external fuel systems for the DPGDS and legacy systems are slightly different. Since there is a chance that left over legacy systems were transferred to the BEAR sets, both will be discussed in this handbook.

**Warning**

The fuel tank, even when empty, may contain explosive fumes or vapors. Do not expose tank in the vicinity of any source of intense heat. Smoking is prohibited within 50 feet of generators or fuel area. Failure to heed this warning may result in death or injury.

**Warning**

Use only containers designed to handle fuels. Do not use near open flame, heat, or electrical sparks. Avoid prolonged contact with skin or eyes and avoid breathing fumes. Failure to comply may result in serious injury or illness.

**Caution**

Ensure fuel lines are protected from electrical cables and routed to minimize potentials for physical damage and tripping hazards.

5.5.1. DPGDS External Fuel Storage/Manifold System. **Figure 5.8** illustrates the major components of the collapsible fuel tank assembly. The external fuel hoses for each generator are connected to the external fuel system's manifold (**Figure 5.9**). The manifold may be connected to a multiple sources of fuel, e.g., bladder, truck, etc. Care must be taken to ensure that the electrical cables are not in the proximity of the fuel lines. The external fuel system is grounded separately from the generator grid.

**Figure 5.8. 20,000-Gallon Fuel Bladder Assembly.**

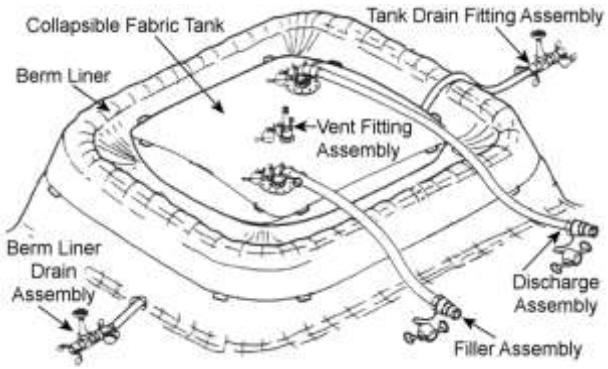

**Figure 5.9. DPGDS External Fuel Supply Layout.**

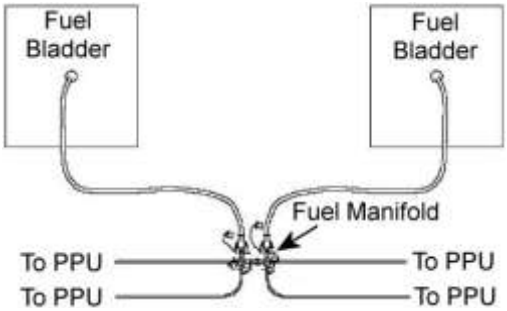


5.5.1.1. Lay out fuel hoses between the generator, fuel manifold, and the fuel bladders to establish the fuel supply system.

5.5.1.2. Install the external generator fuel hose at the fuel inlet connection on the side of the unit (**Figure 5.10**) and the other end to the fuel manifold outlets (**Figure 5.11**).

**Figure 5.10. Fuel Hose Connected to MEP-12A.**

**Figure 5.11. Manifold Assembly.**

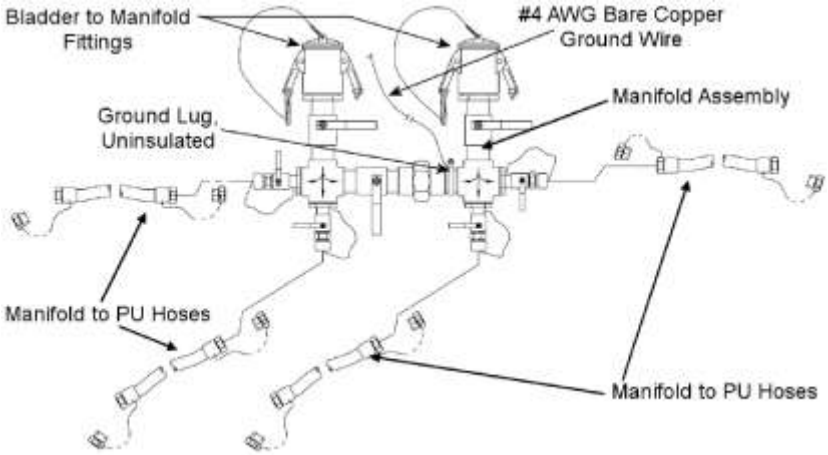


5.5.1.3. Connect the 3-inch hose, with the quick-disconnect fittings, from the fuel manifold to the fuel bladders.

5.5.1.4. Connect the fuel manifold ground wire to the ground grid and then open only the appropriate fuel manifold valves to supply fuel to the power units. Check for leaks at all connections and entire length of fuel hoses.

5.5.2. Legacy External Fuel Storage/Manifold System. The legacy system has two 10,000-gallon fuel bladders weighing 230 pounds each for the MEP-12A 4-unit plant. Bladders come in two sizes: 22 feet wide by 22 feet long or 12 feet wide by 42 feet long when unfolded from the shipping container. When filled, the bladder is approximately 4 feet high and the measured footprint shrinks by about 1 to 2 feet in both directions.

5.5.2.1. There are two filler assemblies, one toward each end of the bladder, that provide connections for fuel filling and discharge to the generators. Bladders have three connections on the top surface—a filler assembly, a discharge assembly, and a vent assembly. The vent assembly is simply a relief

valve and standpipe, and is attached to the fitting on the center of the bladder. The remaining two connections are fitted with elbows. One elbow is configured to adapt to fuel delivery vehicles, the other is connected to a manifold assembly (**Figure 2.19**) with a 3-inch hose. It is advisable to place a sandbag under the 3-inch hose, about two feet out from the elbow, to reduce stress on the bladder fitting connection. Two 1-inch lines leave the manifold assembly and are attached to the generators (**Figure 5.10**). The manifold has a pass through capability to allow fuel to be distributed to other manifolds. Each generator has an internal pump to draw fuel; therefore, no external pumps are necessary in the fueling hose assemblies. Only 50 feet of 1-inch hose is provided with each generator, requiring storage bladders to be set up relatively close to the generators.

5.5.2.2. When setting up a power plant, normally one bladder is provided for every two MEP-12A generators. **Figure 5.12** depicts the common placement of the fuel bladder with respect to the generators.

**Figure 5.12. Typical Fuel Bladder Placement.**

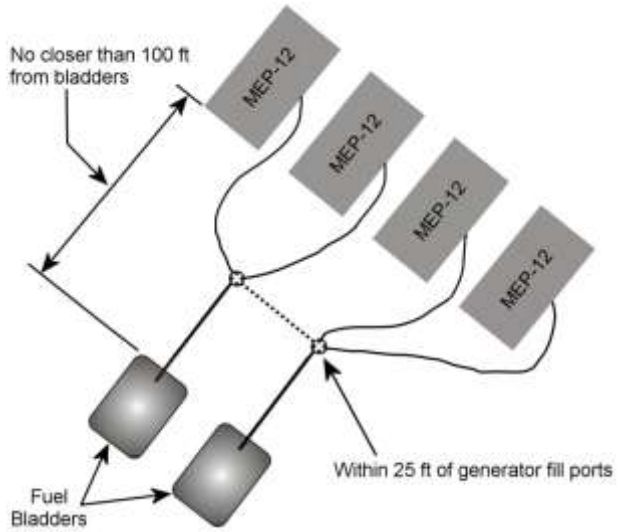

5.5.2.2.1. Generators should be located not closer than 100 feet from the fuel bladders for flammability and fire protection purposes. Decreasing this distance to 50 feet (per AFPAM 91-216, Bare Base Construction Requirements) may be done only with approval of fuels and fire protection personnel and when adequate berming is provided.

5.5.2.2.2. The 1-inch diameter fuel lines are 25 feet long, requiring the manifolds to be within 25 feet of the generator fill ports, but still must have enough slack to be moved and connected.

5.5.2.3. The ground under the fuel bladders requires preparation before bladders can be positioned. An area 16 feet by 46 feet must be leveled to prevent the bladder from "creeping," and any debris or sharp objects must be removed. If sufficient material is available, a 4-inch thick sand bed should be provided under the bladder. Provide a minimum 2-foot clearance around the empty bladder as it is being laid out; the clearance area should be level. The area under the filled bladder should have an even 1-degree slope from the edges of the bladder to the area under the bladder's vent pipe (i.e., about a 5-inch drop). This slope will allow condensation to collect for removal through the vent pipe.

5.5.2.4. To prevent a massive fuel spillage if the tank ruptures, a berm must be built around each bladder. The berm should provide containment of fuels and protection from enemy threat. The minimum fuels containment criteria for the berm are: the berm height is a **minimum of 3.5 feet higher than the bottom of the bladder** and the enclosed volume must be a **minimum of 1.5 times the volume of the bladder.** After meeting these criteria, you should increase the berm height as necessary to prevent entry by terrorist vehicles or to stop fragmentation from indirect-fired weapons, such as rockets, grenades, and mortars. The inside ground dimensions of the berm should be 16 feet by 46 feet to allow a two foot working area around the entire bladder. A drain with valve should also be installed in the berm wall to allow draining of surface water (see **Figure 5.13** for berm details).

**Figure 5.13. Bladder and Berm Detail.**

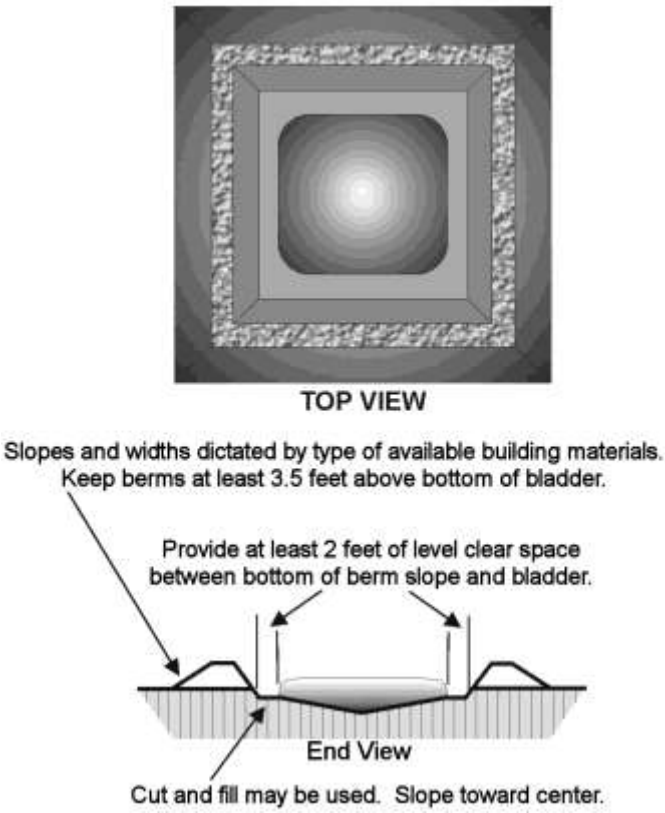


5.5.2.4.1. For berms enclosing two or more bladders, the intermediate berm walls between bladders may be eliminated with the approval of fire protection and fuels personnel.

5.5.2.5. The elevation at the bottom of the fuel tanks may be even with the existing ground level or semi-depressed (i.e., the bottom of the berm is lower

than the previous ground level). A semi-depressed tank is normally used when there is inadequate fill soil (i.e., either an unsuitable type soil or no soil available) in the area and the excavated soil can be used in the berm walls.

5.5.2.6. Carefully consider where you place the fuel bladders. Don't put them in a location that would permit fuel from a ruptured bladder and berm to flow downhill into other base areas or waterways. Lastly, be sure you have developed a plan for fuel containment in case a bladder and berm rupture or refueling operations result in major spillage.

**5.6. PSC Installation.**

5.6.1. Site Preparation. The installation site should relatively level and capable of bearing the weight of the PSC. Clear the site of brush, large rocks, and other items that might interfere with the operation, maintenance, access to, or stability of the unit. Ensue area is free from potential floods or potential washout from rains. Ensure adequate access to all removable outside panels and door openings. If possible, make use of terrain features to minimize the heat loads on the PSC by placing the unit in a shady area.

5.6.2. Grounding. Drive a ground rod at least 8-foot into the earth within 5 feet of the PSC housing until only 6 inches protrudes above the ground surface. Secure the ground wire to the exposed ground rod end with the ground rod clamp provided. Test for ground resistance IAW Chapter 10, Section III of **AFJMAN 32-1082** and then attach the loose end of the ground wire to the PSC external ground lug.

**5.7. PDC Installation.** A thorough visual inspection of the equipment is required before use to insure that no shipping damage has occurred. The inspection should include checking for broken, missing, or loose components. Repair or replace components as necessary. PDCs also need to be checked to ensure internal components have not been damaged during shipment. You should test all three phase-to-phase and three phase-to-ground connections. You are looking for infinite readings; see T.O. 35CA1-2-6-1 for details.

5.7.1. Site Preparation. The PDC should be installed with no more than **1 degree of tilt** (i.e., within 1 degree of level) (**Figure 5.14**); 1 degree of equipment tilt is 0.209 inches per foot (i.e., 2.1 inches in 10 feet). If the unit shifts or settles after placement, then verify that it is still within 1 degree of level. If the unit is tilted more than 1 degree, the area under the unit should have fill added to bring the unit back to level. Also, the general ground slope near the PDC should not exceed 1%. The preferred method of installation is to grade the area **under the PDC to level** and then grade the area **around the PDC to slope away at 1% for drainage**.

**Figure 5.14. PDC Site Requirements.**

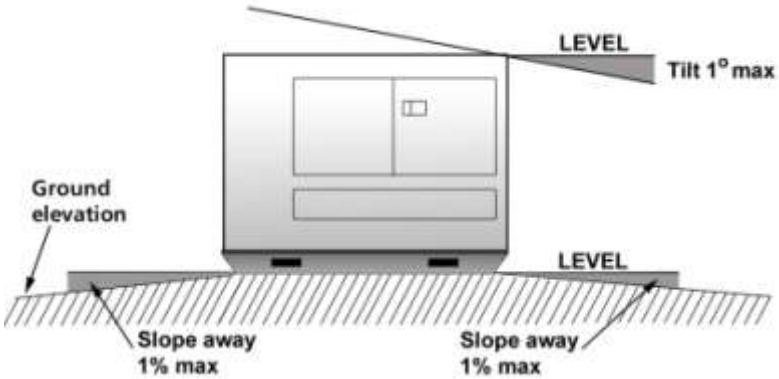


5.7.1.1. It is basically a decision of the PDC installer and the climate as to where the 1% slope for drainage needs to start either at the base of the PDC or 6 to 10 feet away. Ensure that the heavy equipment operator provides accurate grading. The slope away from the unit prevents standing water or ice from forming where the equipment is located and the operators are standing. The type of base material (i.e., does it hold water or is it free-flowing) and the amount of precipitation also influence the need for drainage. When performing switching operations, ensure that there is no standing water within the 10-foot clearance area.

5.7.1.2. The cables leaving the high-voltage side of the PDC should be buried in trenches. The trenches must be no closer than 6 feet from the high-voltage output trough and the input panel. The PDC should also have ten (10) feet of clearance on all sides around the PDC (**Figure 5.15**) and six (6) feet of clearance above the PDC. This provides for adequate working room with the hot sticks and space for heat dissipation. The PDC should be located as close as possible to the generators while still allowing clear access and cooling air circulation for it and the generators (**Figure 5.16**).

**Figure 5.15. Typical PDC Clearances.**

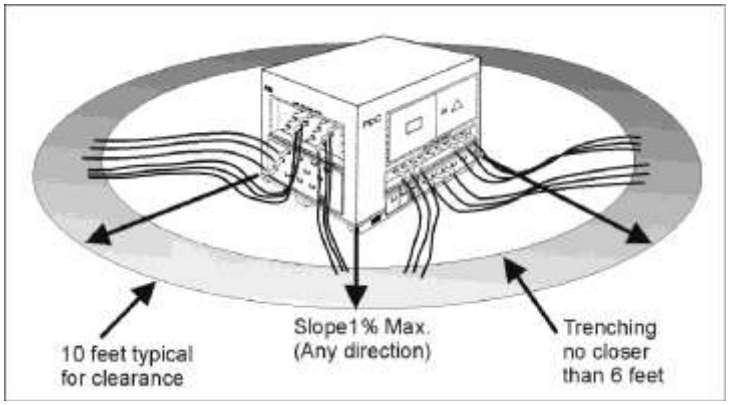


**Figure 5.16. Placement of PDC near Generators.**

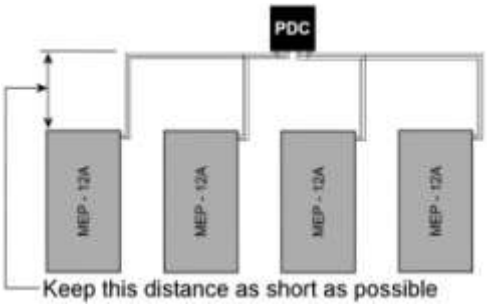

5.7.2. Grounding. The PDC is grounded **at two grounding lugs** located opposite of each other at the bottom left of each output (load) side (**Figure 5.17**). Connection to ground rods is commonly made using **a #2 AWG copper wire**. Drive the rods close to the grounding lugs to reduce tripping hazards. **Bond the two ground rods together with additional copper wire.**

**Figure 5.17. Grounding Locations on the PDC.**

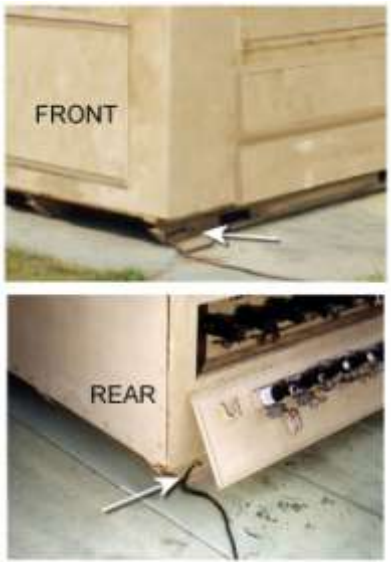


**5.8. Cable Connections.**

> **Warning**
> High voltage may cause severe injury or death upon contact. Use caution and avoid contact with energized components during checkout or maintenance. Use a hot stick when handling cables.

**Warning**

Do not perform the following task when the generator set is operating. Do not touch exposed electrical connections when a source of power, such as utility power or another generator set, is connected to the load terminals. Death or injury may result from failure to observe this warning.

**Warning**

Verify that connection points are de-energized before making any connections. Failure to check that connectors are de-energized may result in injury or death.

**Warning**

Never use grip-all clamp stick with a cable that has power applied. Deadly voltage is present when power is applied and serious injury or death can occur. Always treat cables and high voltage break termination assemblies as if they are powered. Hold grip-all clamp stick as far away as possible from the end holding the high voltage cable.

**Warning**

Be sure loadbreak elbows are fully seated on the input and output bushing well inserts before energizing. Failure to do so can result in damage to equipment.

**Caution**

Exercise caution when transferring the load-break elbow from the parked position to the energized position. Ensure insulated protective caps are positioned immediately upon transfer from one position to the other.

**Note:** Keep cables parked until circuits are ready to be energized.

5.8.1. Connection to Generator. Connect primary cables to the generator by first attaching each cable's concentric ground wire to the ground stud in the power panel box (**Figure 5.18**). After removing red dust caps from the generator output terminals, lightly coat the bushing well insert and loadbreak elbow with dielectric silicone grease. Then, use a Grip-All clamp stick to position a load break elbow over a bushing well insert and push it into place (**Figure 5.19**). Be sure the elbow is completely seated. Repeat this process for all three phases while ensuring no cross-phase connections. Close the Power Panel Box cover and repeat the process for each generator being connected to the PSC/PDC.

**Figure 5.18. Power Panel Box.**

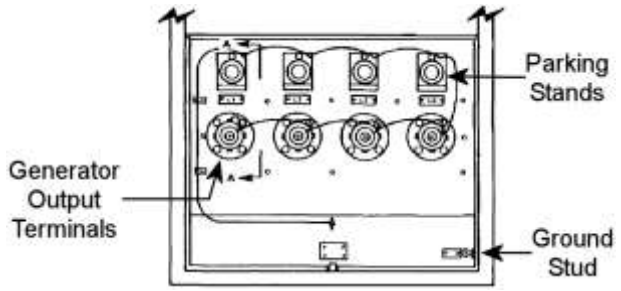

**Figure 5.19. Connecting Cables to MEP-12A with Grip-All Clamp Stick.**

5.8.2. Connection to PSC.

> **Warning**
> Never connect more than 2 MEP-12s to a single PSC, or connect more than 600 amps total generation capacity to a single PSC.

> **Warning**
> Prior to performing any live switching, ensure the SF6 gas pressure gauge needle is in the green (located under the display module on the switching side of WAY 1).

5.8.2.1. Route the cables into the PSC through the bottom opening of the PSC housing.

5.8.2.2. The connections for each Way may be either a switch or a combination of a switch and a circuit breaker. A Load Interrupter Switch is comprised of only a switch. A Fault Interrupter Switch is comprised of a switch and a circuit breaker. Way 1 and Way 2 are Load Interrupter Switches; Way 3, 4, 5 and 6 are Fault Interrupter Switches.

5.8.2.3. Depending on the configuration of a specific application, the Way Switches can either be inputs from the generators or outputs (feeders) to a load such as a Secondary Distribution Center (SDC) or to another PSC.

**Caution**

The use of Way 1 and Way 2 as outputs will result in the loss of circuit protection.

5.8.2.4. Before physically connecting the cables to the PSC bushing well inserts, twist together and bond the high-voltage cables' concentric neutrals to the ground lug nearest the load break connector (**Figure 5.20**).

**Figure 5.20. Grounding Brackets.**

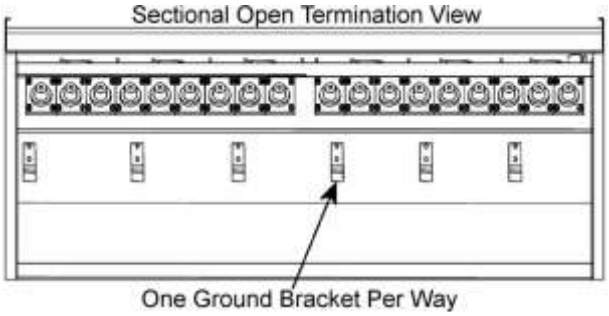


5.8.2.5. Then, lightly coat the bushing well insert and loadbreak elbow with dielectric silicone grease and connect each phase cable to the appropriate phase connection on the PSC using the Grip-All clamp stick. Install high-voltage terminal caps on all line side bushing well inserts not in use.

5.8.3. Connection to PDC. To permit the flexible movement of feeder cables between the PDC's online bushings and the parking stands once cables are entrenched, it is imperative that all cable entrenchments approach the PDC parallel to the side that cables will be connected as shown in **Figure 5.21**.

**Figure 5.21. PDC Cable Approach Plan.**

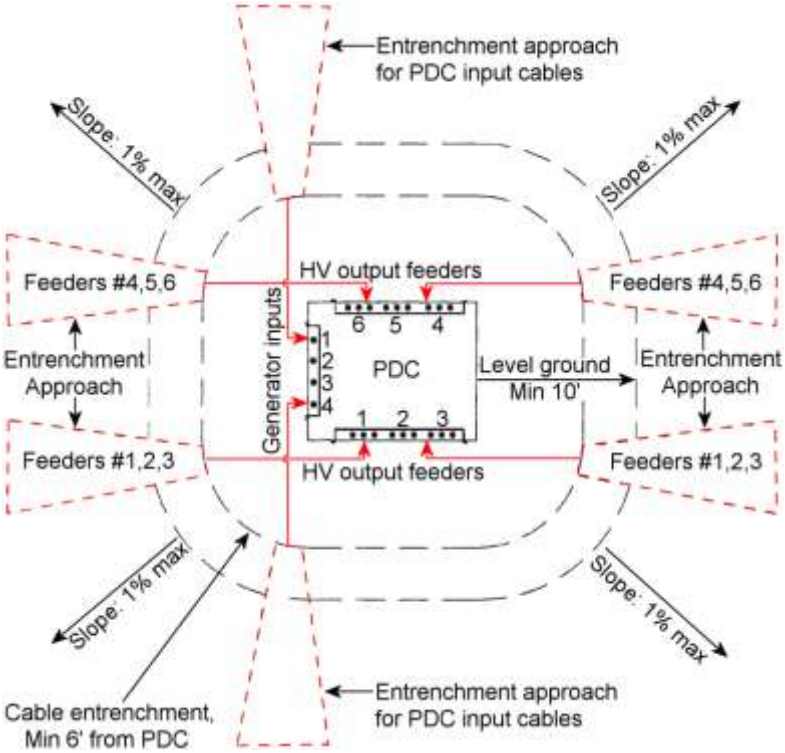


5.8.3.1. Line Side Connections. Insert loadbreak elbows on parking stands and connect concentric neutral wires from each input cable to the grounding lugs next to each used input connection point (**Figure 5.22**).

**Figure 5.22. Ground Stud at Input Connection.**

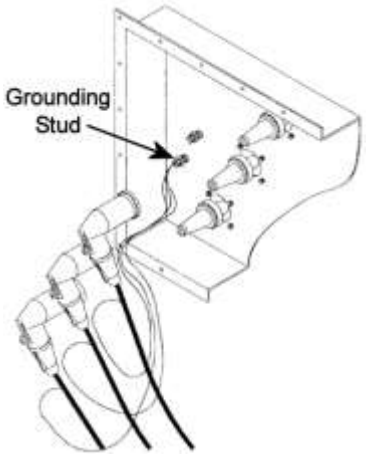


**Note**: Ensure there is enough cable and concentric neutral length to allow loadbreak operation and parking of elbow. If concentric neutral is not long enough to reach ground connection, unwind additional length from cable. Providing a service loop is recommended for future troubleshooting and maintenance requirements.

**Warning**

Any bushing well insert not used on the line side is energized by the common bus bar, and has a high voltage potential of 4160V!

5.8.3.1.1. Lightly coat the bushing well insert and loadbreak elbow with di-electric silicone grease. Remove loadbreak elbows from the parking stands and connect them to the corresponding input connectors Phase A, Phase B, and Phase C (**Figure 5.23**) using the Grip-All clamp stick. Install high-voltage terminal caps on all unused bushing well inserts.

**Figure 5.23. PDC Line Side Connection.**

5.8.3.2. Load Side Connections. Connect concentric neutral wires from each cable to the lug terminals on the ground bus plates at the bottom of the PDC output panel face. Then, lightly coat the bushing well insert and loadbreak elbow with dielectric silicone grease and connect cables to the load bushings of the PDC (**Figure 5.24**). Remove arc strangler switches (**Figure 5.25**) from any unused circuits to totally isolate them from the power source. Place insulated caps or dust covers on all unused output bushing wells to protect them from dust, dirt, and adverse weather.

**Figure 5.24. PDC Output Feeder Connection.**

**Figure 5.25. Arc Strangler Switches Removed from Unused Feeder.**

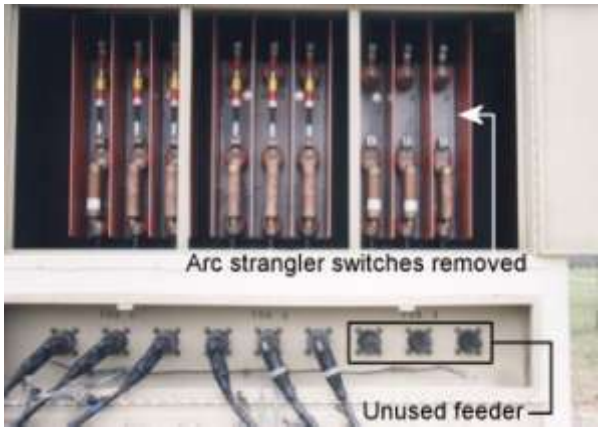


**5.9. PDC Installation Checkout.** After PDC installation and connecting cables, perform installation checkout procedures as described in **Table 5.1**.

**Warning**

IAW **UFC 3-560-01**, use voltage-rated gloves with hot-line tools. At least two workers, fully qualified on high voltage must be available.

**Warning**

Wear rubber gloves rated not less than 5000V when opening access doors, removing lexan barriers, and when performing high-potential voltmeter test. Treat all equipment and cables as if energized. Lethal voltages can cause serious injury or death.

**Table 5.1. PDC Installation Checkout.**

| | |
|---|---|
| **Installation Inspection & Pre-energizing Procedures** | |
| ___ 1. | Ensure that PDC has been installed, located, and oriented properly. |
| ___ 2. | Ensure that all cabling has been installed in accordance with T.O. |
| ___ 3. | Ensure equipment is accessible to personnel installing the PDC. |
| ___ 4. | Ensure accomplishment of all pre-energizing service procedures. As a minimum, perform the following:<br>__ a. Check all cable terminations for tightness.<br>__ b. Ensure all arc-strangler switchblades have been removed and are secured by the Electrical Supervisor or designated officer.<br>__ c. Install all lexan barriers, remove all loose and foreign matter, and close fused switch assembly access doors.<br>__ d. Check all PDC external ground and concentric neutral connections for mechanical and electrical security.<br>__ e. Ensure all personnel are clear and it is safe to energize PDC. |
| **Energize and Preliminary Testing** | |
| ___ 5. | Check with generator operator(s) that power sources are available. |
| ___ 6. | Energize PDC from MEP-12/power source. |
| ___ 7. | Once all power inputs are energized and stable, wearing rubber gloves, open fused switch assembly access doors. Then remove the lexan barrier from the #1 output feeder circuit compartment. |
| ___ 8. | Using high-voltage phase test set, test for 4160 VAC on line side of switchblade mounts. Test phases A, B, and C, to ground respectively. |
| ___ 9. | If no voltage at any test point, document discrepancy in equipment records and refer to T.O. Troubleshooting Table 5-5. |
| ___ 10. | De-energize the PDC at power sources. Test all 3 phases of output feeder circuit #1 with high-potential voltmeter to ensure unit is de-energized. |
| ___ 11. | Replace lexan barriers and close fused switch assembly doors. |
| **Installation Verification of Operation** | |
| ___ 12. | Operate PDC in accordance with paragraph 4.2 of T.O. If faults occur, de-energize immediately and refer to Chapter 5 in T.O. for troubleshooting. |

**5.10. Energized PDC Emergency Disconnect.** If during installation or operation a problem occurs and an emergency energized disconnect of an output circuit is required, disconnect using the **arc strangler switches—not the load break elbows**. Use the following procedures for emergency disconnect.

5.10.1. Two qualified electrical personnel with safety and electrical equipment must be available to disconnect (isolate) the circuit. Use rubber gloves to open doors and remove lexan barriers**. Make sure that the hole in the arc strangler switch shaft is not exposed.** If it is visible, then the circuit must be de-energized; do not attempt an emergency disconnect.

5.10.2. Two qualified electrical personnel with switch sticks and wearing proper Arc Flash PPE, one designated to handle Phase A and other Phase C, position themselves at a 90-degree angle to the fuses. While holding, the far end of the switch sticks with insulated gloves, engage the switch sticks into the pull rings of the two outside arc strangler switches, Phases A and C (**Figure 5.26**).

**Figure 5.26. Disconnecting Phase A and C Arc Strangler Switches.**

5.10.3. On the command of **"OPEN" by the person pulling Phase A**, **both personnel pull the switch blades open** at the same time.

5.10.4. The **person at Phase A immediately goes back and pulls the arc strangler switch for Phase B** (**Figure 5.26a**).

5.10.5. Then, one person removes all three arc strangler switches from the mounting brackets.

(Added) **Figure 5.26a. Disconnecting Phase B Arc Strangler Switch.**

5.10.6. If the system must be re-energized during the emergency, reverse above procedures for installing and throwing switches. Ensure that SDC individual circuit breakers for facilities and PDPs are off prior to reconnecting the PDC; this will prevent surging. Ensure each switchblade engages and that at least half of the hole on the front of the switchblade shaft is covered by the arc strangler sleeve (i.e., hole is no longer exposed).

**5.11. Remote Generator Operation.** For long term operation, or plant operation where several generators are in use simultaneously, control panels (**Figure 5.27**) are removed from the units and installed in the control rack (**Figure 2.17**) inside a centralized power plant control room, usually an ESC or similar facility (**Figure 5.28**). The equipment rack can accommodate up to four MEP-12A generator control panels.

**Figure 5.27. MEP-12A Control Panel.**

**Figure 5.28. Power Plant Control Room (ESC).**

5.11.1. Six control cables, each 50 feet long (**Figure 5.29**), are used to connect the control panel to the generator. Because two cable runs are needed between the panel and the generator, the panel location is limited to 150 feet from the generator.

**Figure 5.29. Control Cables.**

5.11.2. Cable-to-cable connections are basic cannon plugs. One end of each of the cable lines is attached to the wiring harnesses that the control panel was originally connected to in the generator (**Figure 5.30**); the other end of each cable is attached to the top of the control panel in the equipment rack.

**Figure 5.30. Control Cables Connected at MEP-12A.**

**5.12. Connections Between Plants.** At high-threat beddown locations, facility dispersal is the norm. This also applies to power plants. Two or more plants should be established (quantity is predicated on population and size of the installation) to ensure some degree of electrical generation capability is retained after an attack or similar hostile act. These plants should be part of a loop electrical distribution network to ensure some degree of electrical generation capability is retained after an attack. See **paragraph 3.4.13** for more information on interconnecting plants.

**5.13. Remote Area Lighting Set (RALS).** Another item designated for the power plant area is a remote area lighting set (**Figure 2.5**). This set is one of several that will usually be deployed to a contingency location but this particular set is meant to be dedicated to power plant support. It is used at a power plant to provide overall general lighting for safety and security and specific lighting for more critical or technical operations such as refueling. The RALS includes a panel box/receptacle container, 13 light pole and fixture assemblies, cables to connect the lights to the panel box, and cables to connect the panel box to an SDC. The panel box/receptacle container also serves as the storage and shipping container for the cables and lights. Although the lights work using photocells, the panel box/receptacle container should be placed within the power plant compound (perimeter fence) for security purposes and in case manual operation is ever desired. The cable

provided for connection to an SDC is only 250 feet long; therefore you'll have to ensure an SDC is nearby. The same SDC should also provide service to the power plant ESC and air conditioner. Twelve of the 13 lights are connected to four 375-foot cable sections. Normally two strings of six lights are set up, each string 750 feet long. Each string is plugged into the panel box/receptacle container. The thirteenth light fixture is mounted on the panel box itself. Remember, however, that the RALS does not have an internal power source; it relies on getting power from an SDC. For emergency purposes, it is wise to have one or two of the floodlight sets provided in the BEAR package immediately available to support power plant operations.

**5.14. Contingency Electrical System Installation Checklist.** After the electrical system and power plants have been installed, and before energizing the system, use the checklist in **Attachment 3** to ensure the system is ready.

**5.15. DELETED.**

## Chapter 6

## Information Collection, Records, and Forms

**6.1. Information Collections.** No information collections are created by this publication.

**6.2. Records.** The program records created as a result of the processes prescribed in this publication are maintained in accordance with AFMAN 33-363 and disposed of in accordance with the AFRIMS RDS located at http://afrims.amc.af.mil/reds series.cfm.

6.2.1. Adopted Forms. AF IMT *847, Recommendation for Change of Publication*.

6.2.2. Prescribed Forms. No prescribed forms are implemented in this publication.

KEVIN J. SULLIVAN, Lt General, USAF
DCS/Logistics, Installations & Mission Support (A4/A7)

**Attachment 1**

**GLOSSARY OF REFERENCES AND SUPPORTING INFORMATION**

***References***

AFI 32-1064, *Electrical Safe Practices*, 25 May 2006

AFMAN 91-201, *Explosive Safety Standards,* 18 October 2001

AFPAM 10-219 Volume 5, *Bare Base Conceptual Planning Guide*, 1 June 1996

AFPAM 91-216, *USAF Safety Deployment and Contingency Pamphlet*, 9 Aug 2001

AF Handbook 10-222 Volume 1, *Guide To Bare Base Development*, 1 February 2006

AF Handbook 10-222 Volume 2, *Guide To Bare Base Assets*, 1 April 2006

AF Handbook 31-302, *Air Base Defense Collective Skills*, 1 January 1996

AFJMAN 32-1082, *Facilities Engineering – Electrical Exterior Facilities*, 29 November 1996

AFOSH STD 91-10, *Civil Engineering*, 1 July 1998

UFC 3-560-01, *Electrical Safety, O&M*, 7 December 2006

T.O. 00-105A-12, *Installation, Operation, Maintenance Instruction and Packaging for Reshipment with IPB – Electrical Distribution System, Bare Base, Secondary Distribution Center, Remote Area Lighting System, Primary Cable Reel Pallet,* 11 November 1994

T.O. 31-1-141, *Basic Electronics Technology and Testing Practices*, 28 April 2006

T.O. 35CA1-2-6-1, *Operations and Maintenance Instructions with IPB – Primary Distribution Center*, 15 September 2002

T.O. 35CA6-1-101, *Operation, Maintenance and Overhaul Instructions with IPB – Power Distribution Panel*, 8 September 1995

T.O. 35C1-2-1-301, *Operation and Maintenance Instructions with IPB, Harvest Falcon Electrical System*, 1 May 1992

T.O. 35C2-3-474-1, *MEP-012A Generator Set Operator and Organizational Maintenance Manual*, 24 June 1999

T.O. 37A12-15-1, *DPGDS External Fuel Supply (EFS)*, 30 June 2004

***Abbreviations and Acronyms***

**ABD**—Air base defense

**AC**—Air conditioning

**ACH**—Aircraft hanger

**ACS**—Agile combat support

**AEF**—Air and Space Expeditionary Force

**AOR**—Area of Responsibility

**ATPV**—Arc Thermal Performance Value

**AWG**—American wire gauge

**BEAR**—Basic Expeditionary Airfield Resources

**CRPA**—Cable reel pallet assembly

**DOD**—Department of Defense

**DOT**—Department of Transportation

**DPGDS**—Deployable Power Generation and Distribution System

**ECU**—Environmental control unit

**EFD**—Electric fusible disconnect

**EFS**—External fuel system

**ESC**—Expandable shelter container

**FSTFS**—Frame supported tension fabric shelters

**GP**—General purpose

**GSC**—Generator set controls

**HE**—Harvest Eagle

**HF**—Harvest Falcon

**HPS**—High-pressure sodium

**Hz**—Hertz

**IOP**—Industrial Operations

**KVA**—Kilo-volt ampere

**MEP**—Mobile electric power

**MKT**—Mobile kitchen trailer

**MSS**—Medium shelter system

**NMS**—National Military Strategy

**ORT—**Operator's Remote Terminal

**PDP**—Power distribution panel

**PS**—Primary switch

**PSC**—Primary switch center

**RALS**—Remote area lighting system

**SDC**—Secondary distribution panel

**SSS**—Small shelter system

**TQG**—Tactical quiet generator

**TO**—Technical order

**UTC**—Unit type code

**Attachment 2**

## GENERAL INSTRUCTIONS FOR ASSEMBLING LOAD BREAK ELBOWS

A2.1. Use these instructions in combination with the manufacturer's load break elbow installation instructions. Always follow the manufacturer's instructions that come with the load break elbows if available.

> **Warning**
>
> Ensure cable is not energized before attempting to assemble load break elbows. Energized cables may be lethal.

A2.2. When measuring to cut cables, remember that the initial cable layout is on the surface and will be buried as time permits. Snake the cable sufficiently between equipment items along the cable route to provide enough slack to drop the cable into the trench.

A2.3. When laying out the cable as it is coming off the cable reel pallet assembly, add approximately 10 feet beyond its expected final position for installing the load break elbow and cut the cable at this location.

A2.4. Train the cable to the final assembled position with six feet of cable extended beyond the bushing to provide sufficient concentric neutral wire to attach to the system ground bus (**Figure A2.1**). This length will also provide sufficient cable slack for seating the elbow and moving it between parking stands and the connection bushing.

A2.5. From the end of the cable, pull one concentric neutral wire down and through the cable jacket at least 13 inches past the expected bushing location (**Figure A2.2**). Completely strip and remove the cable jacket to this point to provide flexibility for elbow operation (**Figure A2.3**).

**Figure A2.1. Extend Cable 6 Feet Beyond Bushing Centerline.**

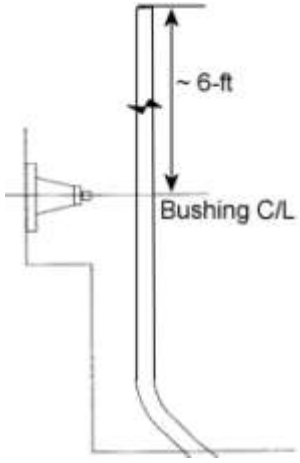


**Figure A2.2. Strip Cable Jacket 13-inches Past Bushing Centerline.**

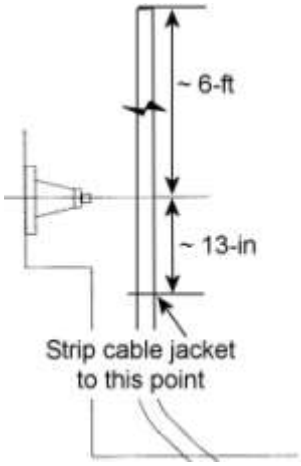

**Figure A2.3. Stripping Away Cable Jacket.**

A2.6. Unwind the cable's concentric neutral wires to this point and bend them back along the cable and twist all but two of the concentric wires into a grounding pigtail **(do not cut these wires)**. Cut the two wires that were left out of the pigtail so that there is approximately 18 inches exposed from the cable jacket. Temporarily wrap the bent pigtail wiring using electrical tape to prevent damage during further installation efforts (**Figure A2.4**).

**Figure A2.4. Concentric Neutral Wires with Temporary Wrapping.**

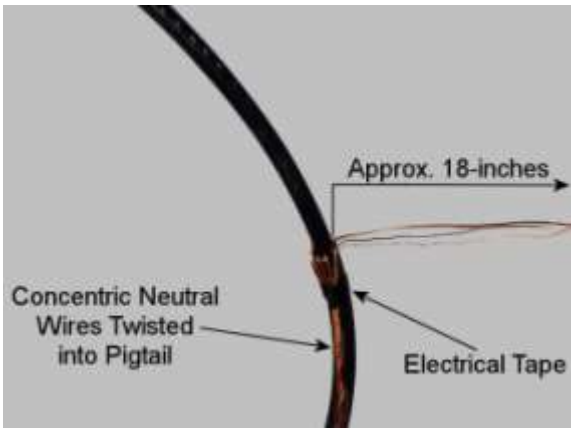

**A2.7. MANUFACTURER'S INSTRUCTIONS AVAILABLE. Use steps in paragraphs A2.7.1 thru A2.7.2.3 when manufacturer's installation instructions are available:**

A2.7.1. From the instructions, determine the required length of cable needed for installing the load break elbow. This distance is usually 8-1/2 or 9 inches above the point where the cable jacket was removed. Mark the cable at this location and cut the cable squarely at this mark (**Figure A2.5**).

**Figure A2.5. Cut Cable Squarely at Bushing Centerline.**

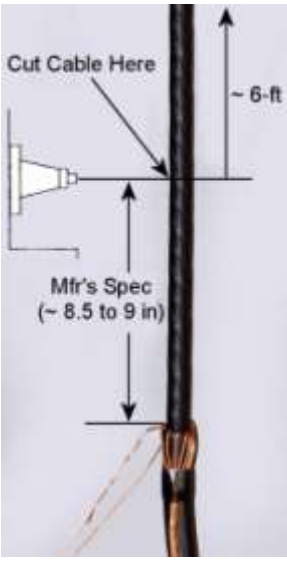


A2.7.2. Make the cable cutbacks in accordance with the manufacturer's installation instruction sheet included with each kit. A brief summary follows.

A2.7.2.1. Remove the insulation shield (semiconductor) by making a circumferential cut part way through the shield. Exercise extreme caution to avoid nicking the insulation beneath. Make several longitudinal cuts part

way through the shield from the circumferential cut to the end. Again exercise care not to nick the insulation. Strip the insulation shield to this length (**Figure A2.6**).

**Figure A2.6. Remove Shield from the Insulation.**

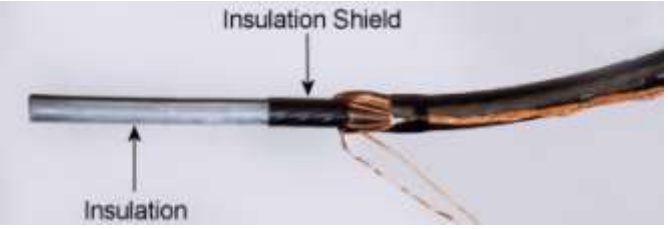


A2.7.2.2. Lightly sand and use electrical cleaner to remove any marring of the bare insulation (**Figure A2.7**).

**Figure A2.7. Sand and Clean the Insulation to Remove Marring.**

A2.7.2.3. From the manufacturer's instructions, determine the length of bare conductor that should fit into the compression lug (usually 1-15/16 inches). Carefully remove the insulation and conductor shield (semiconductor) from the end of the cable (**Figure A2.8**). Cut squarely being careful not to nick the

bare cable strands of the conductor. Apply a 1/8 inch bevel to the end of the insulation.

**Figure A2.8. Remove Insulation from Conductor.**

**A2.8. NO MANUFACTURER'S INSTRUCTIONS. If there are NO instructions or dimensions provided by the manufacturer, use the steps in paragraphs A2.8.1 thru A2.8.5 to determine cutback deminsions:**

A2.8.1. Place the neck of the load break elbow next to the cable so that the end of the elbow is at the point where the concentric neutral wires are bent back (normally 8-1/2 inches). Mark the cable at the center of the load break elbow bell opening, and cut squarely at the mark (**Figure A2.9**).

**Figure A2.9. Measure Distance to Cut Cable with Elbow.**

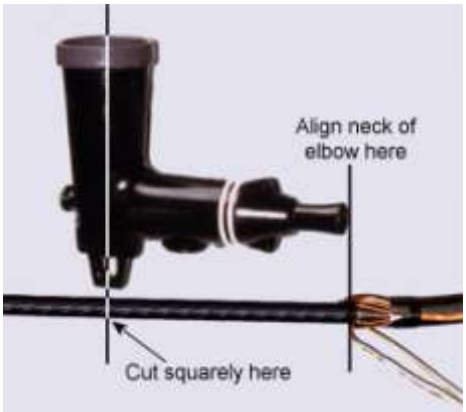

A2.8.2. Push a piece of scrap wire into the opening at the base of the compression lug until it bottoms out to measure the inside length of the lug, this will be referred to as "B" (**Figure A2.10**). **Note**: The *compression lug* may also be called various terms by the manufacturer, such as the *connector barrel*, *contact bushing*, or *connector bushing*.

**Figure A2.10. Measuring Inside Length of Compression Lug.**

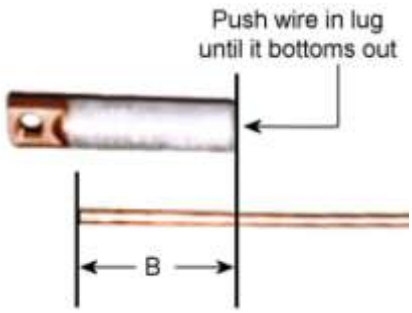


A2.8.3. Using **Figure A2.11** as a guide, place the compression lug next to the bell opening of the load break elbow such that the lug's eye aligns with the center of the load break elbow's bell opening (line A). Place the cut end of the cable next to the lug's maximum depth and mark the cable at the base of the load break elbow where the neck just begins (line C).

A2.8.4. From the end of the cable, measure to point "B" and add one eighth of an inch. At this point, remove the insulation shield, insulation, and conductor shield to expose the bare conductor; try not to nick the conductor (**Figure A2.12**). Clean the exposed conductor using a wire brush.

A2.9. Immediately place the compression lug containing inhibitor grease on the conductor and twist and align to spread the inhibitor coating inside the contact bushing. Check to ensure there is a 1/8 inch gap between the lug bottom and the insulation. This space is needed for expansion of the lug when it is crimped and to prevent damage to the insulation. **Make sure the threaded hole in the lug faces the bushing.** If not properly trained, the cables may

have too much slack requiring the elbows to be twisted 45-90 degrees to make the connection. This misalignment will likely create tension on the lug and, through vibration, may produce a loose connection leading to fires or unscheduled outages.

**Figure A2.11. Guide for Determining Shield Removal.**

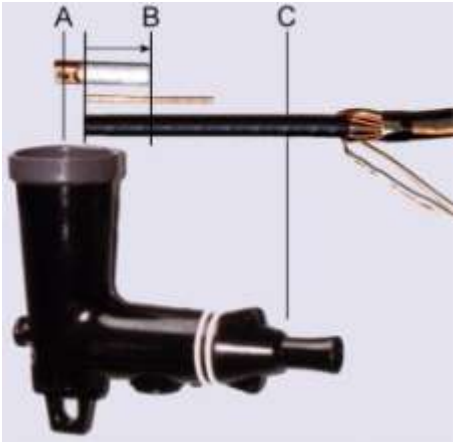


**Figure A2.12. Insulation and Conductor Shield Removed.**

A2.10. It is a good idea to hand tighten the probe into the threads of the compression lug prior to crimping. This will prevent distortion of the compression lug's eye and to ensure proper thread engagement. Place as many

crimps on the compression lug barrel as will fit without overlapping using a tool and die combination (**Figure A2.13**). After crimping, remove the probe and smooth any sharp edges or ears caused by the crimping process. Clean the excess inhibitor grease from the lug by wiping toward the threaded eye with a lint free cloth saturated with safety solvent (inhibitor residue can result in insulation damage and ultimate terminator failure). **Note:** Crimping tools and their instructions vary; follow the manufacturer's instructions.

**Figure A2.13. Crimping Compression Lug.**

A2.11. Remove the insulation shield to the mark at "C," as determined earlier. Take care that you do not nick or gouge the insulation. Cut a one-eighth inch bevel on the insulation to ease the installation of the elbow (**Figure A2-14**). Do not bend the cable along the unprotected length where the insulation is exposed. Protect the insulation from damage while exposed.

A2.12. Clean the exposed insulation surface with aluminum oxide abrasive cloth (Garnet Cloth) to remove all traces of semi conducting shielding and other foreign matter; do not use emery cloth which contains conductive grit (**Figure A2.15**). Then wipe all exposed insulation surfaces with a lint free cloth saturated with safety solvent. Wipe towards the black semiconductor material without touching it. Be careful not to drag the black semiconductor

material onto the clean insulation. In addition, clean the inside of the elbow housing, the cable entrance, and the loadbreak bushing.

**Figure A2-14. Insulation Shield Removed.**

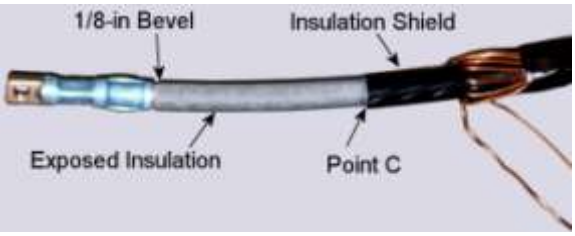


**Figure A2.15. Cleaning Insulation with Abrasive Cloth.**

A2.13. When the solvent is completely dry, apply a thin coat of silicone grease, supplied with the elbow kit, to the exposed cable insulation, elbow housing, elbow cable entrance, and loadbreak bushing. With a twisting motion, push the elbow onto the cable until the threaded eye of the compression lug is visible through the elbow bell housing (**Figure A4.16**). Use a clean dry rag to remove all excess silicon grease from the neck area of the load break elbow.

**Figure A4.16. Pushing Elbow onto Cable and Aligning Lug's Eye.**

A2.14. Insert the threaded end of the loadbreak probe into the elbow housing being careful not to contaminate the probe with silicone grease. By hand, thread the loadbreak probe into the threaded eye of the compression lug (**Figure A2.17**). Be careful not to cross thread the connector and probe, as cross-threading causes loose connections. Tighten the loadbreak probe with the torque applicator tool supplied with the elbow kit. Proper torque is applied when the torque applicator bends 180 degrees from its original shape (do not reuse the torque applicator).

A2.15. To seal the cable and load break elbow from extraneous debris and moisture, use electrician's tape to wrap the end of the load break elbow and exposed insulation shield (**Figure A2.18**) from the area at the load break elbow's base to the exposed concentric neutral wires.

**Figure A2.17. Tightening Probe with Torque Applicator.**

**Figure A2.18. Wrap the End of the Elbow for Protection.**

A2.16. Depending on manufacturer of the load break elbow, feed one or two strands of concentric neutral wire through grounding eye(s) of the load break elbow (**Figure A2.19**). Twist and secure, and then cut off any excess wire.

Take care not to damage the grounding eye(s) on the elbow when connecting the concentric neutral wires.

**Figure A2.19. Ground Wires Connected to Grounding Eyes.**

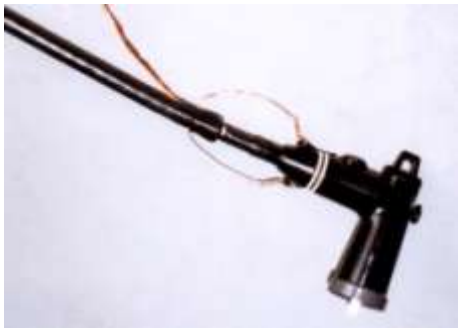

A2.17. Lubricate the bushing, elbow bell, and arc follower portion of the probe assembly with lubricant supplied prior to seating on a bushing.

A2.18. Prior to energizing the circuit, install the load break elbow on the parking bushing. Fasten the ground wire to the grounding lug or bus plate. Move the load break elbow between the parked bushing and the soon to be active bushing to determine if the pigtailed ground connection is of the correct length.

A2.19. If the pigtail length is adequate, finish wrapping around the base of the bent wires and the cable as shown in **Figures A2.18** and **A2.19**. In addition to sealing the outside jacket of the cable, this will provide stress relief for the bent portion of the concentric neutral wires. If the pigtail ground is too short, unwind additional length of concentric neutral wires until the pigtail length is adequate. Then, finish wrapping electrician's tape around the base of the bent wires and up the insulation shield to the base of the elbow.

**Note:** In most situations, approximately 3 feet of jacket below the elbow can be removed. The jacket must be retained on all primary cable in contact with soil and for a minimum of 1 foot above finished grade.

**Attachment 3**

**CONTINGENCY ELECTRICAL POWER SYSTEM INSTALLATION CHECKLIST**

| | |
|---|---|
| __ | ***1. Has a holding area for temporary storage of incoming electrical system components been established?*** |
| __ | 2. Have mission essential facilities been identified and coordinated with the appropriate command? |
| __ | 3. Have the locations of mission essential facilities been identified? |
| __ | 4. Has a requirement for sustained operations at the contingency location been confirmed? |
| __ | 5. Has an initial estimate of the electrical loads of mission essential facilities been made to aid in sizing generators to the requirements? |
| __ | 6. Has vehicle/equipment support for moving electrical equipment to site locations been arranged? |
| __ | 7. Do all electrical installation crews have an individual capable of operating materials handling equipment? |
| __ | 8. Have SDCs been placed at locations where emergency/back-up generators can serve multiple mission essential facilities? |
| __ | 9. Have emergency/back-up generators been connected to mission essential facilities? |
| __ | 10. Have light carts been operationally checked and allocated to critical flightline functional areas? |
| __ | 11. Have personnel been identified to perform routine maintenance and refueling operations on emergency/back-up generators? |
| __ | 12. Have electrical feeder schedules been developed based on the layout of the various base facility groups? |
| __ | 13. Have SDC circuits been sized to handle future air conditioning loads (if applicable)? |
| __ | 14. Has a plan showing the layout of the electrical distribution system been developed? |
| __ | 15. Have locations for power plants been determined? |
| __ | 16. Have prime generators been positioned at power plant locations? |

| | |
|---|---|
| __ | 17. Have fuel bladders been installed at power plant locations? |
| __ | 18. Have fuel bladders been properly bermed? |
| __ | 19. Have control panels been correctly connected to prime generators? |
| __ | 20. Have PSCs/PDCs been placed and connected at power plants? |
| __ | 21. Have adequate grounding systems been installed at power plants? |
| __ | 22. Have SDCs been allocated to and placed in the various facility groups in such a way that portions of the groups can be brought on line as facilities are erected? |
| __ | 23. Have SDCs been placed in areas accessible to vehicles, yet not adjacent to heavy traffic or personnel flow? |
| __ | 24. Have SDCs been grounded? |
| __ | 25. Have the cables connecting facilities, panel boxes, SDCs, PSCs/PDCs initially been installed along the surface of the ground? |
| __ | 26. Have cables that cross roadways been adequately protected from damage by vehicle traffic? |
| __ | 27. Have facilities been brought onto the base electrical grid as soon as reasonably possible once electrical connections have been completed? |
| __ | 28. Have emergency/back-up generators serving mission essential facilities been placed in backup power mode once power plant electrical service was available? |
| __ | 29. Have personnel been specifically designated to provide around-the-clock power plant operation? |
| __ | 30. Have RALS units been installed at locations requiring large-scale area lighting? |
| __ | 31. If sustained operations are planned and electrical system is fully functional in an above ground mode, have efforts been started to bury electrical cables? |
| __ | 32. Have accurate records/drawings been made of buried electrical cables? |
| __ | 33. Have power plant operators been informed of what plant operation records to maintain? |
| __ | 34. Have arrangements been made for power plant refueling? |