BY ORDER OF THE
SECRETARY OF THE AIR FORCE

AIR FORCE MANUAL 91-201

18 OCTOBER 2001

PACIFIC AIR FORCES COMMAND
Supplement 1

7 JUNE 2002

Safety

EXPLOSIVES SAFETY STANDARDS

COMPLIANCE WITH THIS PUBLICATION IS MANDATORY

NOTICE: This publication is available digitally on the AFDPO WWW site at: **http://www.e-publishing.af.mil.**

OPR: HQ AFSC/SEP (Maj William J. Andrews)

Certified by: HQ USAF/SE
(Maj Gen Timothy A. Peppe)

Supersedes AFMAN 91-201, 7 March 2000.

Pages: 347
Distribution: F

This manual implements Air Force Policy Directive (AFPD) 91-2, *Safety Programs*, and DoD 6055.9-Std, *DoD Ammunition and Explosives Safety Standards*. It establishes a central source for explosive safety criteria. It identifies hazards and states safety precautions and rules when working with explosives. It applies to everyone involved in explosives operations of any kind at Air Force, Air National Guard and Air Force Reserve-owned or leased facilities and to US-titled ammunition in contractor or host-nation facilities. Compliance is mandatory, but only as minimum safety standards. See **Attachment 1** for a glossary of abbreviations, acronyms, and terms used in this manual.

Send major command (MAJCOM) supplements to HQ USAF/SE, 9700 Avenue G SE, Kirtland AFB NM 87117-5671, for approval before publication. Send recommended changes on AF Form 847, **Recommendation for Change of Publication,** any conflicts with other Air Force directives as well as general correspondence about the content of this manual through command channels to HQ AFSC/SEP, 9700 Avenue G SE, Kirtland AFB NM 87117-5671.

(PACAF) This publication applies to all personnel involved in PACAF explosives operations and to US-titled ammunition in contractor, leased, or host nation facilities. This publication applies to PACAF-based and gained Air National Guard (ANG) and Air Force Reserve Command (AFRC) units. Compliance is mandatory, but only as minimum safety standards. Send recommended changes on AF Form 847, **Recommendation for Change of Publication**, any conflicts with other Air Force directives as well as general correspondence about the content of this manual through command channels to HQ PACAF/ SEW, 25 E Street Suite A305, Hickam AFB HI 96853-5403.

SUMMARY OF REVISIONS

This change incorporates new Department of Defense Explosives Safety Board (DDESB) criteria, clarifies guidance, and updates references. Specifically it list MAJCOM JA coordination for non-DoD munitions storage requests (paragraph **1.3.2.**); updates Operational Risk Management references throughout the manual; adds information on fusible links (paragraph **2.27.7.**); clarifies explosives license procedures (paragraphs **2.35.** - **2.35.6.**); clarifies static electricity and grounding guidance (paragraphs **2.51.** - **2.51.3.2.**); clarifies side flash guidance (paragraph **2.54.1.3.**); updates electromagnetic radiation hazard guidance (paragraphs 2.54.2.1. - 2.54.2.5.); provides expanded guidance on clear zones extending past the base boundary (paragraph **3.2.1.1.**); updates quantity-distance criteria and notes (**Table 3.3.**); incorporates new criteria for EOD procedures (paragraphs **3.28.1.**, **3.28.1.7.**, **3.28.3.6.**, 3.28.7., **3.28.4.4.**, **3.28.4.9.** and **3.28.4.10.**); updates AIM-7 with WAU-17 warhead guidance (paragraphs **3.34.5.** - **3.34.6.**, and **Table 3.26.**); adds new terms and definitions to glossary; updates AF Form 943 guidance (**Attachment 4**); provides new DDESB guidance for PTR criteria (**Attachment 10**). A bar (|) indicates revision from the previous edition.

(PACAF) This document is substantially revised and must be completely reviewed. This supplement incorporates HQ PACAF changes and additions to AFMAN 91-201, 18 Oct 01, which incorporates Interim Change (IC) 2001-1. It clarifies Weapons Safety's role in Base Support Planning (paragraph **1.4.2.**); directs Wing Weapons Safety to publish wing supplements to AFMAN 91-201 (paragraph **2.3.7. (Added)**); directs personnel limits to be annotated on the AF Form 2047 (paragraph **2.5.3.**); provides guidance on the static display of operational aircraft (paragraph **2.7.2.**); clarifies the need for an exemption/waiver for hunting/fishing/recreation within a Munitions Storage Area (paragraph **2.13.**); directs the Exercise Evaluation Team (EET) Chief to develop a single risk assessment for wing exercises (paragraph **2.16.**); clarifies the requirements for Military Working Dog (MWD) training involving explosives (paragraph **2.17.**); appoints the authority having jurisdiction as the final determination authority for fire protection equipment (paragraph **2.21.8.5.**); establishes igloo earth cover depth check requirements (paragraph **2.27.6.**); establishes withdrawal distances for improvised explosive devices found in amnesty boxes (paragraph **2.31.5. (Added)**); allows the wing weapons safety manager to add to the explosive facility licensing program (paragraph **2.35.**); establishes a 5 calendar day turn-in period for exercise munitions (paragraph **2.35.6.** and **Attachment 14 (Added)**, **A3.8.** Remarks); provides security requirement guidance for licensed facilities (paragraph **2.35.7.1.**); adds various EOD shock tube initiating devices to the list of items not requiring an explosives license (paragraph **2.36.**); provides reference to unserviceable explosives items turn-in guidance for licensed locations (paragraph **2.37.4.3.**); clarifies written procedures for turn-in of ammunition from a maintenance facility (paragraph **2.37.5.6.**); clarifies the removal of Kevlar vests during explosives operations (paragraph **2.51.1.**); provides guidance to ensure ammunition containers are not secured to hazardous locations in a vehicle (paragraph **2.59.**); allows the mixing of authorized compatibility groups when transporting munitions in a single military vehicle (paragraph **2.64.3.**); directs the use of a trailer to transport EOD munitions when a separate cargo compartment is not available (paragraph **2.70. (Added)**); provides guidance on Hazard Class/Division (HC/D) **1.2.**x Q-D separation for aircraft survivability (**Table 3.3.**, Note 17); incorporates 7 AF/CC letter for reduced Q-D criteria for Combat Aircraft Parking Areas (CAPA) (**Table 3.3.**, Note 22/23 and **Attachment 15 (Added)**); incorporates PACAF/CV letter for reduced Q-D criteria to military-only runways and taxiways as an attachment (**Table 3.3.**, Note 30); establishes Q-D separation for non-explosives loaded aircraft and removed reference to non-explosive loaded combat aircraft (**Table 3.3.**, Note 43); establishes Q-D separation for runway arresting systems and weather instruments (**Table 3.3.**, Note 66); authorizes bases in

Korea to use **Table 3.17.** when siting 1st, 2nd, and 3rd generation aircraft shelters (paragraph **3.20.3.**); authorizes the use of austere area provisions for select bases (paragraph **3.21.2.**); requires the submission of an approved airfield waiver when siting explosives in an Airfield Explosives-Prohibited Zone (paragraph **3.25.2.**); directs a risk assessment be accomplished for all demonstrations involving the detonation of explosives (paragraph **3.27.**); adds electric matches for authorized off-range training (paragraph **3.28.4.11. (Added)**); adds plaster or Avon slugs for authorized off-range training (paragraph **3.28.4.12. (Added)**); provides guidance for exceptions incurred at Forward Operating Locations (FOL) in Alaska (paragraph **4.1.3.1.** and **4.1.3.2.**); directs wings to publish Net Explosive Weight (NEW) guides (paragraph **4.2.**); updates ESP submission protocols (paragraph **4.3.3.**); clarifies the explosives siting requirements for certain facilities and situations (paragraphs **4.8.1.1.** and **4.8.1.2.**); directs the project number from the Automated Civil Engineer System - Program Management (ACES-PM) be provided for new construction (paragraph **4.11.3.6.**); directs the documentation of future construction within an explosives clear zone (paragraph **4.11.3.6.**); directs the use of GeoBase or GPS in determining questionable separation distances (paragraph **4.11.4.**); directs the use of **Figure 5.1.**, Exception Decision Nomograph - Day-to-Day Operations, for exceptions incurred at Alaska FOLs (paragraph **5.3.**); directs the use of **Figure 5.1.**, Exception Decision Nomograph - Day-to-Day Operations, for exceptions incurred at Alaska FOLs (paragraph **5.5.2.3.**); and directs personnel limits to be annotated on the AF Form 2047 and munitions to be turned in within 3 calendar days of exercise end (paragraph **A3.8.**). A "|" indicates revised material since the last edition.

AFMAN 91-201, 18 October 2001, is supplemented as follows:

Chapter 1—INTRODUCTION **14**

Section 1A Explosives Safety General Instructions 14

1.1. Policy. 14

1.2. Scope. 14

1.3. Storing and Disposing of Non-DoD Owned Explosives. 15

1.4. Planning for Deployments. 17

Section 1B Assessing Explosives Risks 18

1.5. Commander's Risk Assessment. 18

Figure 1.1. Six-Step Process of Operational Risk Management. 19

Table 1.1. Quantity-Distance Criteria For Non-DoD Explosives Activities.1,2 20

Chapter 2—EXPLOSIVES SAFETY REQUIREMENTS **21**

Section 2A General Guidance 21

2.1. General Information. 21

2.2. Personnel Qualifications. 21

2.3. Locally Written Instructions. 21

2.4. Contents of Locally Written Instructions. 21

2.5. Personnel and Explosives Limits. 22
2.6. Health and Environment. 23
2.7. Static or Public Display. 23
2.8. Safety Certification of Munitions Systems. 23
2.9. Fireworks Displays. 24
2.10. Housekeeping. 24
2.11. Smoking. 24
2.12. Handling Explosives and Movement Precautions. 25
2.13. Hunting. 25
2.14. Training Ammunition. 26
2.15. Simulators and Smoke Producing Munitions. 26
2.16. Training and Exercise Plans Involving Explosives. 27
2.17. Military Working Dog Explosives. 27

Section 2B Fire Protection 28

2.18. Guidance. 28
2.19. Fire Drills. 28
2.20. Alarms. 28
2.21. Fire Prevention Requirements. 29
2.22. Fire Extinguishers. 31
2.23. Storing Water for Firefighting. 31
2.24. Emergency Withdrawal Distances. 31
2.25. On-Scene Placarding Guidance to Emergency Personnel. 32

Table 2.1. Minimum Withdrawal Distances (in feet) for Explosives Involved in Fire. (All notes apply) 33

Figure 2.1. Fire Symbols. 35

Figure 2.2. Chemical Symbols. 36

Table 2.2. Fire Symbol Hazards and Actions. 38

Table 2.3. Chemical Symbol Hazards and Actions. 39

Section 2C Storage and Compatibility 41

2.26. Basic Criteria. 41
2.27. Requirements for Storage Locations. 44
2.28. Storage Magazines. 44

2.29. Explosives Stocks. 45
2.30. Damaged Containers and Unpackaged Items. 45
2.31. Unserviceable Explosives Items. 45
2.32. Authorized Operations in Storage Spaces Containing Explosives. 46
2.33. Repairing Containers. 47
2.34. Repairing Explosives Facilities. 47
2.35. Licensed Explosives Locations. 48
2.36. Items or Situations not Requiring a License. 50
2.37. Safety Requirements for Specific Facilities and Explosives. 51
2.38. Base Defense Support Munitions for Dispersed Locations. 54
2.39. Toxic Substances. 55
2.40. Dividing Walls. 55
2.41. Multicube or Segregated Magazines. 55
2.42. Compatibility of Ammunition and Explosive Items. 56
2.43. Mixed Compatibility. 58
2.44. Exceptions to Compatibility. 58
Table 2.4. Storage Compatibility Mixing Chart All notes apply 59
Section 2D Electrical Hazards 60
2.45. General Information. 60
2.46. Hazardous Locations. 60
2.47. Approved Equipment. 61
2.48. Electrical Service. 61
2.49. Permanent Lighting for Storage Magazines. 62
2.50. Flashlights and Lanterns. 62
2.51. Static Electricity. 62
2.52. Static Grounding and Bonding. 63
2.53. Installed Systems and Equipment Grounds. 65
2.54. Lightning Protection. 67
2.55. Electrical Testing of Explosives Items, Components, and Weapon Systems. 69
2.56. Procedures in Event of Electrical Storms. 69
2.57. Grounding Aircraft for Explosives Loading and Unloading Operations. 70
2.58. Hazards of Electromagnetic Radiation to Electro-Explosive Devices (EED). 71

Table 2.5. Recommended EED Safe Separation Distances and Power Densities. 76

Figure 2.3. Recommended Safe Separation Distances for EEDs in Exposed Condition 78

Section 2E Transportation 79

2.59. Guidance. 79

2.60. Federal Regulation. 79

2.61. Basic Directives. 79

2.62. Local Laws Regulating Transportation of Explosives and Dangerous Articles. 79

2.63. Hazard Classification Requirements. 79

2.64. Compatibility of Explosives During Transportation. 80

2.65. Packaging. 81

2.66. Shipment of Explosives Which Have Been Damaged or Failed To Function. 82

2.67. Guides for Controlling Incoming Explosives Shipments. 82

2.68. Explosives Movement Routes on Base. 82

2.69. Safe Haven. 82

2.70. Vehicle and Materials Handling Equipment General Safety Requirements. 82

2.71. Transporting Explosives. 83

2.72. Battery-Powered Materials Handling Equipment. 85

2.73. Gasoline or Diesel-Powered Materials Handling Equipment. 85

2.74. Motor Vehicle Transportation. 86

2.75. Transporting Dangerously Unserviceable Explosive Items for Disposal. 89

2.76. Railroad Transportation. 89

2.77. Movement of Explosives Shipments by Air. 93

2.78. Transportation of Explosives by Water. 93

Section 2F Testing, Procedures Verification, Disassembling and Modifying Explosives Items 93

2.79. Guidance. 93

2.80. Technical Personnel and Guidance. 93

2.81. Authorized Operations. 94

2.82. Protective Requirements. 94

Section 2G Command Unique Explosives Items and Situations 95

2.83. General Information. 95

Section 2H Space and Intercontinental Ballistic Missile Requirements 95

2.84. General Information. 95
2.85. Support Facilities 95
2.86. Safety Control Area. 96
2.87. Simultaneous Operations. 96
2.88. Barricades. 97
2.89. Space Launch Complex. 97
2.90. Space Test Facilities. 97
2.91. Risk Management. 97

Chapter 3—APPLYING QUANTITY-DISTANCE (Q-D) CRITERIA 100

Section 3A General Q-D Guidance 100
3.1. Introduction. 100
3.2. Types of Separations. 100
3.3. Concurrent Operations. 103
Table 3.1. Distance to Prevent Breaching (Intraline Protection). 104
3.4. The Hazard Classification System. 104
3.5. Hazard Classes and Divisions. 105

Section 3B Q-D Application 107
3.6. General Information. 107
3.7. Determining Explosives Content of Items. 107
3.8. Determining the Explosives Content of a PES. 107
3.9. Exposed Sites. 109
3.10. Measuring Distance. 109
3.11. Determining Q-D Separations. 109
Table 3.2. Maximum HC/D 1.1, 1.2.1, and 1.2.2 Explosives Allowed. 111
Table 3.3. Quantity-Distance Criteria. 113
Table 3.4. Factors for Computing IL from Igloos. 125
Table 3.5. Quantity-Distance for 3rd Generation HAS to Unhardened ES. 125
Figure 3.1. Reduction for Sparsely Populated Locations. 126
Table 3.6. Quantity-Distance Separation Distance. 127
Table 3.7. Class/Division 1.1 Intraline Distances From Earth-Covered Igloos. 130

Table 3.8. Hazard Sub-Division 1.2.1 Quantity-Distances (IB, PTR, IL)8,9 for Munitions with NEWQD > 1.6 Pounds. [7] 131

Table 3.9. Minimum Fragment Distances for HC/D 1.2.1 or HC/D 1.1 Items Stored in Structures Which can Contribute to the Debris Hazard.[9, 10, 11] 133

Table 3.10. Hazard Sub-Division 1.2.2 Quantity-Distances (IB,PTR,IL)[7,8] for Munitions with NEWQD < 1.6 Pounds. 135

Table 3.11. Reserved For Future Use. 136

Table 3.12. Hazard Class/Division 1.2 Separation Distances From Side and Rear Exposures of all Igloos.1 136

Table 3.13. Hazard Class/Division 1.3 and 1.2.3 Separation Distances. [(1) (2)(4)(7)(8)(9)] 137

Table 3.14. Hazard Class/Division 1.6 Separation Distances. 139

3.12. Barricades. 140

Figure 3.2. Typical Barricade - Stack Relationships. 144

Figure 3.3. Orientation Effects on Intermagazine Distance. 145

Section 3C Q-D Criteria For Specific Facilities or Situations 146

3.13. Related Facilities. 146

Table 3.15. Related Facilities. 146

3.14. Rocket Storage, Checkout, and Assembly (RSCA) Building. 149

3.15. Loading Docks. 149

3.16. Vehicle and Rail Transportation Areas. 149

3.17. Vehicle Parking Areas. 150

3.18. Warehouses. 151

3.19. Electrical Utilities. 151

3.20. Hardened Aircraft Shelters (HAS) and Flow-thru Revetments. 152

3.21. Munitions in Austere Areas. 153

3.22. Module Description and Siting Criteria in Austere Areas. 154

Table 3.16. Intershelter Separation Criteria for Aircraft Survival1 (HC/D 1.1 only). 155

Table 3.17. Intershelter Separation Criteria To Prevent Simultaneous Detonation[6,7] (HC/D 1.1 only). 156

Table 3.18. Separation Distances for Missiles in Aircraft Shelters. 158

Figure 3.4. Hazard Zones for Hardened Aircraft Shelters and Igloos. 159

Figure 3.5. Typical Eight Cell Module. 160

3.23. Modular Storage Restrictions. 161
3.24. Reserved For Future Use. 161
3.25. Combat Aircraft, Explosives-Loaded Aircraft, Airfield Areas, and Related Support Facilities. 161
3.26. Aircraft Battle Damage Repair Sites. 162
3.27. Planned Detonation or Burns. 162
3.28. Explosive Ordnance Disposal (EOD) Training. 164
3.29. Petroleum, Oil, Lubricant (POL). 166
3.30. Liquid Propellants. 167
Table 3.19. Liquid Propellant TNT Equivalents. 170
Table 3.20. Factors For Converting Gallons of Propellant into Pounds. 172
Table 3.21. Propellant Hazards and Compatibility Groups. 173
Table 3.22. Quantity-Distance for Propellants.[9] 176
Table 3.23. Hazard Group IV Separation Distances. 178
Section 3D Applying Q-D Principles to Specific Weapons Systems and Special Storage Configurations 178
3.31. General Information. 178
3.32. LGM-30 (Minuteman). 178
Table 3.24. Minuteman TNT Equivalencies. 179
3.33. LGM-118 (Peacekeeper). 180
Table 3.25. Peacekeeper TNT Equivalencies. 180
3.34. Tactical Missile Separations (also see **Table 3.26.**). 180
3.35. Aircraft Criteria. 182
3.36. Buffered Storage Concept. 182
3.37. Angled Storage. 183
Figure 3.6. Fragment Zones for General Purpose Bombs. 184
Figure 3.7. F-15 Aircraft Criteria 185
Figure 3.8. F-16 Aircraft Criteria. 186
3.38. Weapons Storage Vaults in Hardened Aircraft Shelters 187
3.39. Specific Items and Situations. 187
Table 3.26. Minimum Distances for Specific Items and Situations. 187
3.40. Space and Intercontinental Ballistic Missile Criteria. 189

3.41. 40mm Ammunition in Armories. 192

Chapter 4—EXPLOSIVES SITE PLANNING, CONSTRUCTION REQUIREMENTS AND ASSESSING RISK 193

Section 4A Explosives Site Planning 193

4.1. General Information. 193

4.2. Basic Guidance. 194

4.3. The Submission Process. 195

4.4. Siting a Potential Explosion Site (PES). 196

4.5. Siting a Non Explosives Exposed Site (ES). 196

4.6. Specific Situations not Requiring Site Plan Submission. 197

4.7. Facility Modifications or Change in Use. 197

4.8. Approval Levels for Specific Explosives Site Plans. 198

4.9. Site Plans Involving Exceptions to Explosives Safety Standards. 199

4.10. Tiered Siting and Risk Management. 199

4.11. Explosives Site Plan Development. 200

4.12. Computerized Site Planning. 205

4.13. Other Explosives Site Plan Format Options. 205

Figure 4.1. Evaluation Zone Examples. 206

Table 4.1. Evaluation Zones for Exposed Sites.1 207

4.14. Siting for Contingencies, Peacetime Deployments or Exercises Simulating Contingencies. 208

4.15. Establishing and Maintaining IBD Clear Zones. 208

4.16. Reduction or Re-designation of Clear Zones. 208

Section 4B Construction Considerations for Explosives Facilities 208

4.17. General Munitions Facility Design Information. 208

4.18. Interior Finishes and Floors for Explosives Handling Facilities. 209

4.19. Fire Walls in PES Facilities 210

4.20. Reinforced Concrete Walls. 210

4.21. Blast Doors. 210

4.22. Building Exits. 210

4.23. Exit Doors. 211

4.24. Safety Chutes. 211

4.25. Emergency Exits and Fire Escapes. 211
4.26. Stairways 212
4.27. Fixed Ladders. 212
4.28. Platforms, Runways, and Railings. 212
4.29. Passageways. 212
4.30. Roads, Walks, and Gates. 212
4.31. Windows and Skylights. 213
4.32. Drains and Sumps. 213
4.33. Choosing and Installing Hardware. 213
4.34. Tunnels. 214
4.35. Powerhouse Equipment. 214
4.36. Refrigeration. 214
4.37. Laundries. 214
4.38. Steam for Explosives Processing and Heating, Operations and Facilities. 214
4.39. Ventilation. 215
4.40. Electrical Equipment. 215
4.41. Outdoor Storage Sites. 215
4.42. Collection of Explosives Dusts. 215
4.43. Water Flow for Explosives Manufacturing Areas and Loading Plants. 217
4.44. Automatic Sprinkler Systems. 217
4.45. Deluge Systems. 217
4.46. Maintenance and Repairs to Equipment and Buildings. 218

Section 4C Assessing Risk by Knowing the Effects of Explosions 218

4.47. General. 218

Table 4.2. K-Factor to PSI Relationship. 219

4.48. Blast Pressure. 219

Table 4.3. Blast Effects. 220

4.49. Fragments. 222

Chapter 5—EXCEPTIONS 223

5.1. General Information. 223
5.2. Definitions and Basic Guidance. 223

5.3. Approval Levels. 224
5.4. Reviews. 225
5.5. Preparing Waivers and Exemptions. 225
Table 5.1. Likelihood of Mishap. 227
Table 5.2. Exposure 228
Table 5.3. Consequence of a Mishap. 229
Figure 5.1. Exception Decision Nomograph - Day-to-Day Operations. 229
Figure 5.2. Exception Decision Nomograph - War Plan Operations. 230
Figure 5.3. Nomograph Plotting Example. 231
5.6. Processing Waivers and Exemptions 232
Table 5.4. Q-D Exception Approval Levels 233

Chapter 6—REAL PROPERTY CONTAMINATED WITH AMMUNITION AND EXPLOSIVES 234

6.1. General. 234
6.2. Disposal. 234
6.3. Identification and Control at Active Installations. 234
6.4. Active Installation Land Disposal. 235
6.5. Remediation of Formerly Used Defense Sites (FUDS). 235
6.6. Termination of Use of Facilities Storing Ammunition and Explosives. 236
6.7. Mineral Exploration and Extraction. 236
6.8. Real Property Contaminated With Ammunition and Explosives. 237

Chapter 7—SPECIAL STORAGE PROCEDURES FOR WASTE MILITARY MUNITIONS 239

7.1. General. 239
7.2. Waivers and Exemptions. 240
7.3. Requirements for Storage of Waste Military Munitions Under Conditional Exemption. 240
7.4. Loss of Conditional Exemption. 241
7.5. Other Storage Standards. 241
7.6. Reporting. 241
7.7. Closure of Facilities Storing Waste Munitions Under Conditional Exemption. 242
7.8. Discontinuance of use for the Storage of Waste Munitions. 242

7.9. Closure of Facilities Storing Waste Military Munitions Under RCRA. 242

Attachment 1—GLOSSARY OF REFERENCES AND SUPPORTING INFORMATION 243

Attachment 2—SOURCES FOR NON-AIR FORCE REFERENCE PUBLICATIONS 259

Attachment 3—HOW TO COMPLETE AF FORM 2047, EXPLOSIVES FACILITY LICENSE 261

Attachment 4—HOW TO COMPLETE AF FORM 943, EXPLOSIVES SITE PLAN 263

Attachment 5—SAMPLE EXPLOSIVES SITE PLAN TRANSMITTAL LETTER AND MAP 269

Attachment 6—SAMPLE NARRATIVE FOR AIR FORCE QUANTITY-DISTANCE EXEMPTION REQUEST 273

Attachment 7—SELECTED SECRETARY OF THE AIR FORCE EXEMPTIONS 274

Attachment 8—MUNITIONS APPROVED FOR STORAGE IN FLIGHTLINE ARMCO REVETMENTS 278

Attachment 9—SUBJECT INDEX 282

Attachment 10—Q-D GUIDANCE FOR ON-BASE ROADS 294

Attachment 11—TEXT OF IC 2001-1 TO AFMAN 91-201 296

Attachment 12 (Added-PACAF)—SAMPLE MEMORANDUM FOR ACCEPTANCE OF RISK FOR REDUCED CRITERIA IN PACAF 344

Attachment 13 (Added-PACAF)—SAMPLE MEMORANDUM FOR INTERSHELTER SEPARATION CRITERIA TO PREVENT SIMULTANEOUS DETONATION 345

Attachment 14 (Added-PACAF)—SAMPLE MEMORANDUM FOR MUNITIONS STORAGE IN AUSTERE AREAS 346

Attachment 15 (Added-PACAF)—SAMPLE MEMORANDUM FOR ACCEPTANCE OF RISK FOR PARKING COMBAT AIRCRAFT AT REDUCED DISTANCE CRITERIA 347

Chapter 1

INTRODUCTION

Section 1A—Explosives Safety General Instructions

1.1. Policy. It is Air Force policy consistent with operational requirements to:

1.1.1. Observe explosives safety practices during all operations (includes war time, preparation for war, armistice, heightened tensions, etc.) that include the use of live explosives.

1.1.2. Comply with Department of Defense (DoD) and Air Force explosives safety and environmental standards.

1.1.3. Provide the maximum possible protection to personnel and property, both inside and outside the installation, from the damaging effects of potential accidents involving ammunition and explosives.

1.1.4. Comply with the cardinal principle for explosives safety. Expose the minimum number of people to the minimum amount of explosives for the minimum amount of time.

1.1.5. Comply with this manual except when compliance with more restrictive local standards is mandatory by an international agreement. When ammunition is not in Air Force custody and under Air Force control, comply with Air Force standards to the extent consistent with agreements or arrangements with the host country concerned. If US Air Force personnel occupy leased bases within North Atlantic Treaty Organization (NATO) countries, the safety distances in NATO AC/258 - D/258 apply to exposures outside the base boundary. Within the base, use NATO criteria for host nation exposed sites. Use the criteria in this manual for US personnel and facilities.

1.2. Scope.

1.2.1. The provisions of this directive apply whenever any explosives, propellant, or similar hazard class 1 energetic materials or other ammunition items in classes 2 through 9 are present on Air Force owned or leased facilities and may, when specified in the contract, apply at Air Force owned and contractor operated facilities. Explosives safety requirements should be clearly specified in the contract. If explosives safety requirements are not specified in a contract, apply the provisions of DoD 4145.26-M, *DoD Contractors Safety Manual for Ammunition and Explosives*. The provisions herein also apply to Air Force ammunition and explosives facilities whenever Air Force titled ammunition and explosives are in the custody of Air Force civilian or military personnel, and to Air Force titled ammunition and explosives in host nation facilities. The provisions also apply to Air Force personnel and facilities exposed by any other Potential Explosion Site (PES), whether it be United States or host nation ammunition and explosives.

1.2.2. The contracting officer provides appropriate portions of this manual to the contractor. Weapons safety personnel will advise the contractor on explosives safety standards.

1.2.3. This standard governs siting and construction of Air Force facilities. Continue to use existing facilities, which do not comply with this standard, for the balance of their useful lives insofar as it can be demonstrated that redesign or modification is not feasible, and that the quantity of explosives, propellants, or chemical agents cannot be reduced for reasons of operational necessity. Review this information at least every five years to see if mission changes will allow bringing the facility into

compliance with current standards. If this is not possible and the facility is still being used for its original purpose and in accordance with its original criteria, then continue to maintain the documentation that was generated/ applicable at the onset. To invoke this grand-fathering clause, have the following on file at the installation:

1.2.3.1. Date of construction, original purpose and quantity of explosives approved.

1.2.3.2. Explosives safety criteria in effect at the time of construction.

1.2.3.3. An explanation why redesign or modification is not feasible.

1.2.3.4. An explanation why quantities cannot be reduced below existing levels.

1.2.3.5. An explanation why current explosives safety criteria cannot be applied to the facility.

1.2.3.6. A statement that risks are not greater than those assumed for the original siting.

1.2.3.7. Written approval from the installation commander and the Major Command (MAJCOM) SE when initially invoking grandfather clause.

1.2.3.8. Documentation of periodic (at least every five years) review by the installation Weapon Safety Manager (WSM) ensuring mission requirements support continued use.

1.2.4. Installations conducting explosives operations without AF/DoD approved site plans must develop base line site plans approved by MAJCOM prior to 31 December 1999, using the criteria in this manual. Base lining authority will expire on 31 December 2005. During the transition period between 31 December 1999 and 31 December 2005, installations must obtain AF/DoD approval for all required site plans on file.

1.2.5. For guidance on situations involving host nation explosives, see paragraph **3.8.9.**

1.3. Storing and Disposing of Non-DoD Owned Explosives.

1.3.1. Listed below are examples of storage or disposal activities involving non-DoD owned or non-Air Force approved ammunition and explosives or other energetic materials on Air Force installations that may be authorized provided the requirements set forth in paragraphs **4.1.3.5.** and **5.2.8.**, and **Table 1.1.** are met:

1.3.1.1. Storage, treatment, or disposal of materials that will be or have been used in connection with an activity of the Department of Defense or in connection with a service to be performed on an installation of the Department of Defense for the benefit of the Department.

1.3.1.2. Agreements with the General Services Administration for the storage of strategic and critical materials in the National Stockpile Program.

1.3.1.3. Temporary storage or disposal of materials for Federal, State, or Local law enforcement agencies, when no alternative solution is available, if an agreement is made between the Secretary of Defense and the head of the agency.

1.3.1.4. Emergency life saving assistance to civil authorities involving the temporary storage or disposal of explosives.

1.3.1.5. Disposal of excess explosives produced under a DoD contract, if the Secretary of the Air Force (SECAF) determines, in each case, that an alternative feasible means of disposal is not

available to the contractor, taking into consideration public safety, available resources of the contractor, and national defense production requirements.

1.3.1.6. Arrangements with the Department of Energy for the temporary storage of nuclear materials or non-nuclear classified materials.

1.3.1.7. Assistance and refuge for commercial carriers carrying material of other Federal agencies during transportation emergencies (e.g., SAFE HAVEN).

1.3.1.8. Storage of any material not owned by the DoD if the SECAF determines that the material is required or generated in connection with the authorized and compatible use of a facility of the DoD, including the use of such a facility for testing material or training personnel.

1.3.1.9. Treatment and disposal of any material that is not owned by DoD if the SECAF determines that the material is required or generated in connection with the authorized and compatible use of a facility of the AF and the SECAF enters into a contract or agreement with the prospective user that is consistent with the best interest of national defense and environmental security; and provides for the prospective user's continued financial and environmental responsibility and liability with regard to the material.

1.3.1.10. Storage of any material that is not owned by DoD if the SECAF determines that the material is required or generated in connection with the use of a space launch facility located on an installation of the DoD or on other land controlled by the United States.

1.3.2. Requests for Secretary of Defense or SAF determinations (as referenced above) will be in memorandum format. Units will forward requests through their MAJCOMs, and will obtain MAJCOM SE and JA coordination (JA refer to full text of 10 USC 2692 with 1998 Authorization Act changes) prior to forwarding to HQ AFSC/SEP. Units need not always submit a single letter for each and every time non-DoD explosives must be stored on base. Instead, units can list the items, quantities, and length of time they know or can reasonably expect they'll have to store for the coming year, or for however far into the future they can realistically predict. Include in these requests explanations of how the storage of the non-DoD explosives will directly or indirectly benefit either the US Government or its citizenry. Examples of potentially justifiable reasons include (but are not necessarily limited to) public safety, support to a federal agency other than DoD; cooperation with state and local governments; support for US Government Foreign Military Sales; DoD-supported commercial space launch activities; enhanced military operations or products, greater military personnel proficiency, and national defense.

1.3.3. When exception is invoked and storage is authorized, paragraph **1.2.** above applies. For packaged non-DoD owned explosives that have been hazard classified and approved for transportation by DOE or Department of Transportation (DOT), use that hazard classification for storage and siting, unless the classification assigned is HC/D 1.2. Treat non-DoD owned items classed as HC/D 1.2 by DOE or DOT as HC/D 1.1, or contact HQ AFSC/SEWE through your MAJCOM/SEW for assistance in determining if a different classification may be applied. When using the DOE or DOT hazard classification, all the conditions listed in paragraphs **2.26.5.3.3.** through **2.26.5.3.9.** apply. The hazard classification assigned to an item is specific to its packaging configuration, and does not necessarily apply to unpackaged or in-process items or materials. When commercial launch vehicles fueled by liquid propellants are located at AF range launch facilities, the explosive equivalents of the fuel combinations listed in **Table 3.19.** may be used instead of the total weight of the fuel in the vehicle for quantity-distance purposes. Lesser weights based on launch vehicle failure analyses may be used if

approved by AFSC/SEW and the Chairman, DDESB. Likewise, a commercial solid rocket booster or booster section located at a DoD range launch facility may be stored using an NEWQD less than 100 percent of the propellant weight only with the approval of AFSC/SEW and the Chairman, DDESB. Foreign-owned military munitions brought onto AF installations to support multinational military training, exercises, or operations may be stored in accordance with the hazard classifications assigned by the appropriate foreign competent authorities, only after a review by the installation's MAJCOM SEW in accordance with documented MAJCOM procedures approved by AFSC/SEW. The approved procedures must be available at the storage installation, and must provide for maintaining documentation of the reviews and the item hazard classifications at the installation." Treat explosives of unknown hazard/class division as 1.1L. It is the responsibility of the requesting agency to insure explosives are properly hazard classified prior to entry onto AF installations.

1.3.3. (PACAF) See paragraph **2.31.4.**

1.3.4. Ammunition that is privately owned by military members or their dependents can be stored on a USAF installation, if the military member is assigned to that installation, or lives in billeting or a dormitory on that installation. Base housing residents (i.e., military families living in government provided family housing) can continue to store their privately owned ammunition in their quarters. However, billeting and dormitory residents can only store their ammunition on base in an approved licensed storage facility. Privately owned ammunition will not be stored in a munitions storage area (MSA). If dormitory and billeting residents elect to store their ammunition on base, they must store their ammunition in approved explosives storage locations only. Privately owned ammunition will not be co-mingled with government ammunition.

1.3.5. For licenses involving privately owned ammunition outside the United States and Guam, obtain the installation's judge advocate coordination in part V of the AF Form 2047, **Explosives Facility License**; this will ensure no host nation laws are being violated.

1.4. Planning for Deployments. The requirements of this manual also apply to contingencies, peacetime deployments, and exercises where explosives are involved. At no time is the observance of explosives safety practices more important than when deploying and/or employing combat forces. Explosives safety is an integral part of combat survivability.

1.4.1. Pay careful attention during planning to ensure compliance with explosives Q-D rules as discussed in Annex FF of the Air Force War Mobilization Plan Vol. 1 (WMP1).

1.4.2. MAJCOMs which have units that deploy or support deployed forces will require these units to develop procedures and site plans for parking explosives-loaded aircraft, as well as receipt, storage, buildup, and delivery of munitions. Explosives safety considerations must be an integral part of the site survey team's visit and subsequent plans for on-going support and oversight. These plans are developed jointly by Operations, Civil Engineering, Logistics, and Safety from both augmented and augmenting MAJCOMs and units. Planning for possible deployments includes:

1.4.2. (PACAF) Each unit (i.e. NAF, Wing, and 607 MMS) will review their Base Support Plan (BSP) and all BSPs for bases where they are tasked to deploy. Weapons Safety personnel must have a thorough knowledge of all munitions requirements necessary to site plan adequate storage, operating, staging, combat aircraft parking and hot cargo locations. The 607 MMS/SEW will maintain current site plans for collocated operating bases and will provide deploying units with current site plan listings

and/or NEW guides. Guidance for the development of base support plans can be found in AFI 10-404, *Base Support Planning*.

1.4.2.1. A review of waivers and exemptions that may impact deployment plans. Selected exemptions are in **Attachment 7**.

1.4.2.2. Periodic updates as munitions commitments and bed-down locations change. Include civil engineering concept plans for constructing required aircraft revetments or protective shelters and munitions storage facilities. For units with a munitions mission but no specific deployment location, site preplanning must be adaptable to any deployment location.

1.4.2.3. Local written procedures for all phases of munitions operations at the deployed location.

1.4.2.4. Briefings to tasked unit personnel on the plans and procedures to be used at the deployment location.

1.4.3. Major commands must ensure adequate explosives safety support is available at the deployment location during planning and bed-down.

1.4.3. (PACAF) Host support units will work directly with their counterparts in the deploying unit. Host support units are responsible for providing deploying units with procedural information concerning operations at their base or Geographically Separated Units (GSU). Units hosting a deployment will request additional weapons safety support through the NAF and PACAF/SEW, when necessary.

1.4.4. The Q-D priority to maintain during planning and employment of combat forces is: (1) maintaining intermagazine (IM) separation, (2) meeting intraline (IL) separation, and (3) protecting unrelated personnel.

1.4.5. See paragraph **4.11.** for explosives site planning requirements.

Section 1B—Assessing Explosives Risks

1.5. Commander's Risk Assessment. Explosives safety criteria in this manual help commanders make informed decisions on the proper mix of combat readiness and safety. These criteria specify minimum acceptable standards for explosives safety. Departure from explosives safety standards must only result from operational necessity and all risks associated with the departure must be completely understood and accepted by the appropriate approval authority. According to AFI 90-901*, Operational Risk Management*, the following ORM principles apply: (1) Accept no unnecessary risk, (2) Make risk decisions at the appropriate level, (3) Accept risk when benefits outweigh the costs, (4) Integrate ORM into Air Force Doctrine and planning at all levels. Refer to AFPAM 90-902, *Operational Risk Management (ORM) Guidelines and Tools*, for methods on eliminating or reducing risk to support the six-step process of Operational Risk Management (see **Figure 1.1.**). If explosives safety Q-D standards cannot be met, the WSM will process the exception in accordance with **Chapter 5**.

Figure 1.1. Six-Step Process of Operational Risk Management.

1. Identify the Hazard. A hazard can be defined as any real or potential condition that can cause mission degradation, injury, illness, death to personnel or damage to or loss of equipment or property. Experience, common sense, and specific risk management tools help identify real or potential hazards.

2. Assess the Risk. Risk is the probability and severity of loss from exposure to the hazard. The assessment step is the application of quantitative or qualitative measures to determine the level of risk associated with a specific hazard. This process defines the probability and severity of a mishap that could result from the hazard based upon the exposure of personnel or assets to that hazard.

3. Analyze Risk Control Measures. Investigate specific strategies and tools that reduce, mitigate, or eliminate the risk. Effective control measures reduce or eliminate one of the three components (probability, severity, or exposure) of risk.

4. Make Control Decisions. Decision makers at the appropriate level choose the best control or combination of controls based on the analysis of overall costs and benefits.

5. Implement Risk Controls. Once control strategies have been selected, an implementation strategy needs to be developed and then applied by management and the work force. Implementation requires commitment of time and resources.

6. Supervise and Review. Risk management is a process that continues throughout the life cycle of the system, mission, or activity. Leaders at every level must fulfill their respective roles in assuring controls are sustained over time. Once controls are in place, the process must be periodically reevaluated to ensure their effectiveness.

Table 1.1. Quantity-Distance Criteria For Non-DoD Explosives Activities.1,2

From / To	Non-DoD[4] Storage	Dod[3]/Joint[6] Storage	Non-Dod[4] Operations	DoD[3] Operations	Shared[5] Launch Facilities
Non-DoD Storage	Check for IM	IM	Check for IM	IB	IB
Dod3/Joint Storage	IM	IM	IB	IL	IB
Non-Dod Operations	Check for IM	IB	Check for IM	IB	IB
DoD Operations	IB	IL	IB	IL	IB
Shared Launch Facilities	IB	IB	IB	IB	IL
DoD Non-Explosives/ Operations Non-Related	IB	IB	IB	IB	IB

NOTES:

1. Non-DoD activities may be conducted only when the risk to the Air Force mission (to include any other tenant DoD mission) has been evaluated and found acceptable, and the non-DoD activities meet the criteria of 10 USC, Section 2692.
2. "Check for IM" means Air Force personnel will determine the MCE for an event as that quantity of explosives that are not separated by IM distance, or equivalent protection.
3. Explosives operations conducted by DoD, or other federal agency, under DoD oversight, procedure, and/or control and in accordance with the explosives safety standards of this manual. This term is applicable only to DoD and federal explosives operations, and to non-DoD commercial enterprises directly supporting DoD and federal explosives contractual efforts.
4. Explosives operations/storage conducted on DoD property in accordance with only this table, BATF, FAA or other federal, state, and local explosives safety requirements. Under these type operations, DoD will be responsible only for insuring IM standards are met as outlined in explosives site plan submissions. This does not constitute "DoD oversight" as intended in note 3.
5. Any space or orbital launch facility that supports both DoD and non-DoD launch services and operations, as determined by Air Force personnel or by mutual agreement when multiple DoD military services are involved.
6. DoD/non-DoD explosives storage under DoD control.

Chapter 2

EXPLOSIVES SAFETY REQUIREMENTS

Section 2A—General Guidance

2.1. General Information. This section provides general information about explosives and safety requirements for operations involving explosives. The absence of specific guidance on a particular operation does not imply that safeguards are not applicable.

2.2. Personnel Qualifications. Personnel who work with explosives will be trained in accordance with AFI 91-202, Chapter 10, and qualified in the tasks to be performed. They must understand all safety standards, requirements, and precautions that apply to the operation. The supervisor must be knowledgeable of all hazards involved in the operation, convey emergency procedures to workers and visitors, and maintain strict housekeeping standards. The supervisor must also know what steps to take when abnormal conditions arise.

2.3. Locally Written Instructions. Develop written instructions, approved by the squadron commander or equivalent, for explosives operations. If other documents such as technical orders and safety briefings cover all applicable items required in paragraph **2.4.** below, separate written instructions are not required.

2.3. (PACAF) The Wing Weapons Safety office must review locally written instructions, regulations, and plans relating to munitions or weapons systems annually.

2.3.1. Coordinate instructions with the installation/wing safety office and all other involved organizations.

2.3.2. Ensure instructions are available at the work site.

2.3.3. All personnel must understand the procedures prior to beginning an explosives operation.

2.3.4. Written procedures are not required for explosives ordnance disposal (EOD) emergency operations in connection with approved render safe procedures.

2.3.5. Locally produced checklists and work cards concerning nuclear operations require approval according to Technical Order (TO) 00-5-1, *Air Force (AF) Technical Order System*.

2.3.6. Written procedures will be in the language workers understand.

2.3.7. (Added-PACAF) Wing Weapons Safety must publish supplements to AFMAN 91-201 to establish unique wing procedures and requirements. Forward copies of approved supplements to PACAF/SEW.

2.4. Contents of Locally Written Instructions. Include the following information, as applicable, in locally written instructions. The MAJCOM will determine items not applicable in their supplement to this manual.

2.4. (PACAF) All items listed are applicable.

2.4.1. Explosives limits, including the hazard class/division and compatibility group of the explosives involved.

2.4.2. Personnel limits, including workers and others. See paragraph **2.5.**

2.4.3. Exact locations where operations will be done.

2.4.4. Safety requirements, to include special requirements for personal protective clothing and equipment.

2.4.4. (PACAF) Include the requirement to remove rings, watches, and jewelry in accordance with AFOSH 91-66 and AFOSH 91-100.

2.4.5. Step-by-step procedures for doing the task (refer to specific steps in the TO for applicable portions of the operation).

2.4.6. Actions to be taken during an emergency or when abnormal conditions are noted.

2.5. Personnel and Explosives Limits. Design explosives operations to ensure compliance with the *Cardinal Principle of Explosives Safety*. This principal is: Expose the minimum number of people to the minimum amount of explosives for the minimum amount of time. Supervisors are responsible for enforcing personnel and explosives limits. However, good industrial safety practices may dictate use of the buddy system. Performance of EOD procedures requires a minimum of two qualified people (one worker and one for safety back-up and to detect errors in procedures). If deployed on a mission where performance of EOD procedures is likely, deploy a minimum of two qualified EOD people.

2.5.1. Posting Explosives Limits. Clearly post the authorized net explosive weight (NEW) and hazard classification/ division (HC/D) of each cubicle, magazine, pad, or building where explosives are stored, maintained, inspected, or handled. An explosives license properly displayed fulfills this requirement for licensed locations.

2.5.2. Posting Operating Limits. For operating locations, clearly post the NEW limits for the operation being conducted. The sited NEW limit for the location is usually more than the NEW limit for an operation since siting may be dependent on the highest NEW permitted at the operating location. These limits may be expressed in units other than weight, such as “bombs, fuzes, or missiles,” so it will be easier to control. Include these limits in written procedures. Posting explosives limits is unnecessary on demolition or EOD training ranges or other similar locations where posting is impractical. However, include limits in local written procedures.

2.5.2. (PACAF) Posting Operating Limits. These limits may be written in the crew book if posting is impractical. The crew chief of the operation must have these limits written down in the crew book and ensure all crewmembers are aware of the munitions items within the operating location.

2.5.3. Posting Personnel Limits. Clearly post personnel limits for the operations being conducted at each explosives operating location. Posted limits will distinguish between supervisors, workers, and casuals and be included in written procedures. ***NOTE:*** Aircraft parking locations, even if used for uploading/downloading explosives are not considered operating locations for personnel counts. Casuals are persons not normally part of an explosives operation but have duties that require their presence, such as quality assurance, safety or inspection personnel. Visitors are non-essential personnel with limited access. Stop operations when visitors are present. Do not post personnel limits for storage locations or licensed storage locations. For operations where posting is impractical, such as ranges, local written procedures containing the information will suffice.

2.5.3. (PACAF) Annotate personnel limits on the AF Form 2047, *Explosives Facility License*, in Section IV, Remarks.

2.6. Health and Environment.

2.6.1. Using organizations must ensure Bio-environmental Engineering Services (BES) conducts a health hazard assessment of the work area and operation when dust or concentrations of vapors, fumes, or gases from explosives, equipment, or other chemicals in the work area are present. The squadron commander must approve the assessment before operations may begin.

2.6.2. Using organizations must ensure each explosives operation is evaluated for compliance with environmental standards. The evaluation must include all hazardous wastes generated during all phases of the operation. Written procedures will identify requirements for the control, storage, and disposition of hazardous wastes.

2.7. Static or Public Display. Do not display, load, or install live explosives items on display aircraft. Do not render explosives items inert for this purpose unless authorized by the specific Air Force Materiel Command (AFMC) item manager or system program office.

2.7.1. Remove live or expended ammunition from aircraft gun systems or safe the gun systems mechanically and electrically before placing the aircraft on display.

2.7.2. Operational aircraft may be displayed without removing egress and life support systems explosive components, including captive missiles with HC/D 1.4 items only; however, visiting personnel must not have access to these items. Take proper technical order safety precautions. Ensure constant surveillance of visiting personnel near actuating controls.

2.7.2. (PACAF) Aircraft canopies and cockpits will remain closed to visiting personnel unless an individual trained and qualified on the egress system or life support system is present at all times. Captive missiles will have umbilicals disconnected and shorting caps installed. See AFI 11-209, *Air Force Participation in Aerial Events*, for additional requirements.

2.7.3. Remove ejection cartridges from external stores release systems or ensure safety pins and devices cannot be easily removed. Isolate firing circuits (eg., circuit breakers pulled).

2.7.4. Refer to AFI 11-209, *Air Force Participation in Aerial Events*, and TO 00-80G, *Make Safe Procedures For Public Static Display*, for procedures concerning static display of aircraft.

2.7.5. Do not grant the public access to explosives storage or operating locations where the duties of the agencies don't require such contact.

2.7.6. Munitions displays must be marked be in accordance with TO 11A-1-53, *Identification of Empty and Inert Loaded Ammunition Items and Components,* and certified in accordance with TO 11A-1-60, *Inspection of Reusable Munitions Containers and Scrap Material*.

2.7.7. Only authorized personnel will perform demilitarization procedures.

2.8. Safety Certification of Munitions Systems. All non-nuclear munitions systems used by the Air Force require safety certification as specified in AFI 91-205, *Non-Nuclear Munitions Safety Board*.

2.8.1. Purchase of commercial off-the-shelf (COTS) explosives or munitions items is prohibited unless they are approved for purchase by OO-ALC/WMOI, 6064 Dogwood Avenue, Hill AFB, UT 84056-5816. Submit requests for approval according to AFI 21-201, *Management and Maintenance of Non-Nuclear Munitions*, Chapter 32.

2.8.2. Emergency requirements are approved by HQ AFSC/SE, 9700 Avenue G SE, Kirtland AFB NM 87117-5671. Air Force laboratories or research and development activities are exempt from these purchasing limitations.

2.9. Fireworks Displays. Commercial fireworks are extremely hazardous, even in the hands of trained experts. Air Force personnel, on or off-duty, must not take part in the transportation, storage, setup or functioning of commercial fireworks for on-base fireworks displays. Units must contract with properly licensed commercial firms to provide all necessary transportation, storage and security, setup, and functioning of fireworks for on base displays. Contractors must comply with safety guidelines in NFPA 1123, *Code for Fireworks Display*.

2.10. Housekeeping. The following are minimum precautions:

2.10.1. Do not commingle waste materials, such as oily rags, combustible scrap, wood, paper, and flammable packing materials with explosives. Place waste materials in separate, approved, properly marked containers. Place containers outside facilities (except for containers required at work locations during operations). Empty working location containers as often as needed, but at least once each workday or shift. For hazardous substances, contact the base environmental management office for additional guidance.

2.10.1.1. Provide grounded, covered self-closing containers for munitions residue. Cover scraps or rags with water or oil if this does not add to the hazard. Number 10 mineral oil is useful for covering pyrotechnic, tracer, flare, and similar mixtures. If using water, immediately immerse scrap to reduce production of dangerous gases.

2.10.1.2. Remove munitions residue at frequent intervals and before leaving at the end of the duty day or shift. Place in the disposal area or a segregated temporary collection point. When using isolated collection points, set up time and quantity limits to ensure timely movement of the material to the disposal area. Don't store munitions residue and scrap material in the disposal area. Dispose of munitions residue in accordance with environmental standards. Develop local written procedures for disposal operations.

2.10.2. Do not use sweeping compounds containing wax or oil on conductive floors. Do not use cleaning agents that include caustic alkalis in locations containing "exposed explosives" (sensitive explosives compounds may be formed). Clean "exposed explosives" from the floor with hot water or steam. Use non-abrasive sweeping compounds. Such compounds are often combustible but not volatile. (Closed cup flash point must not be less than 230 ^{o} F).

2.11. Smoking. Allow smoking in an explosives area or location only in specifically designated locations, where "authorized smoking areas" signs are posted. A “no smoking” sign will be posted at each entrance to an explosives storage area. In areas containing exposed explosives, include a notice that flame-producing devices must be turned over to the entry controller or placed in a container provided. Display a certification of approval by the fire chief in each designated smoking location. Coordinate proposed locations with the installation safety office prior to submitting to the fire chief.

2.11. (PACAF) Use English/Host Nation bilingual signs where appropriate.

2.11.1. AFOSH Standard 91-100, *Aircraft Flightline Ground Operations and Activities*, Chapter 1, governs smoking on the flightline.

2.11.2. Do not smoke in, on or within 50 feet of any motor vehicle, trailer, rail car, or material handling equipment loaded with explosives items.

2.11.3. Provide suitable self closing, properly marked receptacles for cigarette, cigar butts, and pipe heels.

2.11.4. Electrical push-button type lighters that cut off when pressure is released or when lighter tips over are recommended.

2.11.5. A fire extinguisher will be available as determined by the fire chief.

2.11.6. Persons wearing clothing contaminated with flammables, explosives or other hazardous materials are not allowed in smoking areas.

2.12. Handling Explosives and Movement Precautions. Only trained personnel under the supervision of an individual who understands the hazards and risks involved in the operation are to handle explosives. This paragraph applies to handling explosives and movement of explosives within the immediate vicinity of the operation. Follow this guidance:

2.12.1. Handle detonators, initiators, squibs, and other such electrically or mechanically initiated devices in protective containers. Use containers designed to prevent item-to-item contact. Mark to identify the contents.

2.12.2. Do not use bale hooks to handle explosives.

2.12.3. Do not use nails to secure covers or make repairs on explosives containers unless there is no hazard to the explosive item or danger of penetrating protective coverings. Exercise special care when using pneumatic or cartridge activated nail guns.

2.12.4. Do not tumble, drag, drop, throw, roll, or "walk" munitions. Containers designed with skids may be pushed or pulled for positioning.

2.12.5. Do not roll unpalletized conventional high explosive bombs or other explosives authorized by the item TO unless lugs or other projections have been removed or if they are protected by dunnage rails.

2.12.6. Do not use conveyors, chutes, hand trucks, or forklifts in atmospheres and locations where they will create hazards. Interlock and support sections of roller conveyors used to move explosives.

2.12.7. Do not use boxes containing explosives or munitions to support conveyors.

2.12.8. Always consider vehicle and handling equipment type, type of load, and prevailing weather and surface conditions when determining if safe movement is feasible.

2.12.9. Restraining devices designed for use with vehicle and handling equipment will be used in accordance with applicable technical orders.

2.13. Hunting. Hunting may be permitted in and around the munitions storage area if Public Traffic Route (PTR) distance is maintained from all potential explosion sites (PES). Because of the varying conditions and circumstances, procedures and additional restrictions will be determined by MAJCOM and incorporated into the MAJCOM supplement to this manual. Ensure hunting will not hazard ammunition and explosives stored on open pads or in light structures.

2.13. (PACAF) The use of firearms for hunting at less than Public Traffic Route (PTR) distance is not permitted. All other forms of hunting/fishing/recreation at less than PTR will require an exemption/waiver. All hunting/fishing/recreation within a Munitions Storage Area (MSA) will require an exemption/waiver. This does not apply to those personnel assigned to the MSA.

2.14. Training Ammunition. Firing blank ammunition in weapons (.50 caliber or less) fitted with blank adapters is permitted within the munitions storage area. Coordinate operating instructions with the installation weapons safety office and obtain approval from the munitions storage area commander or flight chief. Establish detailed procedures and include the following provisions: a designated disinterested official certify only blanks are loaded; fire extinguishers readily available; misfire procedures; turn-in expended brass; notify appropriate agencies (i.e., safety, munitions flight chief, fire department, and hospital). Except for security forces conducting required training, all other training will be done at a minimum of PTR separation from PESs.

2.15. Simulators and Smoke Producing Munitions. See paragraph **2.35.** for licensing requirements. The following applies to the use of these devices during exercises and training:

2.15.1. Only USAF stock-listed items are authorized for use. Other military services will use DoD approved items only, when using USAF ranges or facilities.

2.15.2. Only trained personnel can prepare and activate these devices. Qualified personnel will provide training on an annual basis to personnel whose duties require them to initiate training simulators. The qualified personnel providing training will be determined locally but may be from EOD, munitions, or weapons safety. These qualified trainers must have had at least four hours of classroom instruction, passed a written test and be qualified to handle, maintain and inspect these items. It is the responsibility of the user organization to request training and maintain training records. Higher headquarters evaluation teams using these devices must present proof of training to the base safety office, prior to use.

2.15.3. Minimum Distances.

2.15.3.1. Personnel or vehicle: Maintain a minimum of 125 feet separation. Personnel who initiate these munitions may be closer than 125 feet, but they should be as close to 125 feet as possible and have their back to the munitions. *Exception*: no specific distance is required for non-toxic colored smoke grenades. Avoid the smoke or follow actions required in **Table 2.3.**

2.15.3.2. Facilities without facing window: Maintain a minimum separation of 100 feet.

2.15.3.3. Facilities with facing window: Maintain a minimum separation of 200 feet.

2.15.3.4. Hardened facilities, including hardened aircraft shelters: Maintain a minimum separation of 50 feet.

2.15.3.5. Petroleum, oil and lubricants storage: Maintain a minimum separation of 200 feet.

2.15.3.6. Aircraft in the open: Maintain a minimum separation of 100 feet or 200 feet if aircraft are explosives loaded.

2.15.3.7. Explosives operating locations, holding areas, open storage areas or butler-type storage facilities: Maintain a minimum separation of 200 feet.

2.15.3.8. Above ground magazines of block, brick, or concrete construction and from earth covered magazines: Maintain a minimum separation of 50 feet.

2.15.3.9. Required distances may be reduced by barriers designed in accordance with TM5-1300, *Structures to Resist the Effects of Accidental Explosions*. Provide the design criteria to HQ AFSC/SEW for approval.

2.15.4. Smoke from grenades and pots is sometimes toxic in high concentrations. Contact Environmental Management and the Fire Department prior to use. These items, along with generators and flares present a fire hazard. Remove combustible materials before functioning. Consider winds and fire hazards such as dry grass or fire bans. Consider using a barrier to control spread of heat during functioning of grenades and smoke pots.

2.15.5. Ground burst or hand grenade simulators present a blast hazard. Exercise caution around people, facilities and equipment. Free the area of combustible material within a ten feet radius. Monitor for proper functioning and disposal of residue. Notify EOD or other qualified personnel when munitions malfunctions. The on-scene commander will determine minimum withdrawal distance for malfunctioned ground burst or hand grenade simulators for the given situation. This distance will never be less than the minimum distances given in paragraph **2.24.2.**, or applicable item TOs, whichever is greater.

2.15.6. Dispose of expended simulators and smoke pots in accordance with environmental standards and TO 11A-1-60.

2.16. Training and Exercise Plans Involving Explosives. The Exercise Team Chief prepares a risk assessment and comprehensive list of explosives detailing the NSN, HC/D, and explosives weights authorized for use in the exercise and a detailed list of locations where munitions will be deployed. The installation commander must give written approval of the plan. Include weapons safety personnel in exercise planning and risk assessment.

2.16. (PACAF) The Installation Exercise Evaluation Team (EET) Chief can satisfy this requirement by developing a single letter or local operating instruction that details all exercises under their control, including those in conjunction with PACAF/IG. All other requirements of the basic manual apply.

2.16.1. Commanders will ensure personnel not normally associated with explosives operations and exercises are not exposed to explosives hazards.

2.16.2. Explosives will not be taken into public assembly places except when required by essential mission needs or immediate security requirements.

2.17. Military Working Dog Explosives. Military Working Dog explosives training aids (including HC/D 1.1) may be transported and handled by qualified personnel in areas that provide realistic and effective training.

2.17. (PACAF) Explosives will be limited to 7 lbs or less dispersed in the building in accordance with **Table 3.26.** The 100-foot IBD evacuation distance for nonessential personnel will be measured from the outside of the structure/facility or aircraft containing explosives in accordance with paragraph **3.10.14.** The installation Military Working Dog (MWD) section, with the assistance of Wing Weapons Safety, will accomplish a detailed risk assessment for signature by the installation commander (reference paragraph **2.16.** of the basic manual and this supplement). Wing Weapons Safety will produce a map/drawing of each authorized training location depicting the 100-foot IBD evacuation distance. These will be attached

to the risk assessment and provided to the MWD section for reference. If aircraft are used for MWD training, ensure the OG/CC or equivalent is involved in the coordination process.

2.17.1. Preclude exposure of personnel not related to the training through prudent scheduling and selection of training sites. Post proper fire symbols at training sites.

2.17.2. Train using locally approved operating instructions. These instructions must include a documented post-training inventory of explosives samples ensuring no explosives are inadvertently left at the training site or discarded.

2.17.3. Inform the installation safety office, Fire Department, and EOD (if applicable) before conducting operations.

Section 2B—Fire Protection

2.18. Guidance. Fire or excessive heat is one of the greatest threats to explosives. This section gives procedures for dealing with these hazards.

2.18.1. Each unit and installation fire protection agency with explosives storage and operations, must develop pre-fire plans as required by AFI 32-2001, *Fire Protection*. Include all explosives locations and operations.

2.18.2. Each Air Force fire alarm central communications center (FACC) will have an area map or computer generated display showing all explosives areas or locations and their fire and hazard symbols to include licensed locations. This map must also show adjacent facilities which are at risk from explosives. Whenever possible, ensure all sites have bona fide location numbers.

2.18.3. Personnel in charge of explosive operations must promptly notify the fire department each time there is a change in fire or hazard symbols.

2.19. Fire Drills. Fire drills will be held within the explosives storage area at intervals not to exceed 6 months.

2.19. (PACAF) Munitions Control will maintain records of these drills in accordance with AFI 37-122, *Air Force Records Management Program*, and AFI 37-138, *Records Disposition-Procedures and Responsibilities*.

2.19.1. Drills are conducted to train fire-fighting forces and unit personnel, and to ensure other personnel involved understand their duties. They also are conducted to evaluate fire alarm systems, fire-fighting equipment, and evacuation procedures.

2.19.2. Coordinated fire drills involving a Fire Department response with the fire chief. This does not preclude unannounced drills of a Fire Department's response capabilities, provided coordination with the fire chief is accomplished at least 30 minutes before starting the drill. Personnel responsible for conducting these drills will ensure all involved are aware that the drill is an exercise, and not an actual fire.

2.20. Alarms. Besides automatic alarm systems required by Military Handbook 1008, *Fire Protection for Facilities,* or other directives, install an audible manually operated evacuation alarm at each explosives operating building (such as a bell, triangle or siren).

2.21. Fire Prevention Requirements.

2.21.1. Heat-Producing Devices. Limit the use of devices that produce temperatures higher than 228° F (109° C) in any explosives area to essential and temporary use. Develop written instructions, coordinated through the installation safety office and approved by the Fire Department, covering the location, purpose, duration, and safety precaution details. Properly installed approved furnaces and electrical space heaters are exempt. Heat-producing devices are not allowed where exposed explosives are present. Ensure personnel are qualified on the equipment prior to use.

2.21.2. Vegetation Control. The local commander determines vegetation control.

2.21.2.1. The primary purpose of vegetation control is to limit the probability of combustible vegetation catching fire and to slow the spread of vegetation fires.

2.21.2.2. Except for firebreaks, maintain grounds in or near explosives areas or locations as unimproved grounds. Limit maintenance to that which is necessary to prevent erosion or other waste of natural resources.

2.21.2.3. Balance the level of vegetation control with operational factors, such as cost to control, security, erosion prevention, and passive defense (camouflage).

2.21.2.4. Use varieties of vegetation that are resistant to burning where feasible. Don't use herbicides or soil sterilants if complete removal of vegetation will tend to cause soil erosion. Select vegetation for earth cover of magazines so that their weight or root system will not damage the structure. Do not allow dead or cut vegetation to accumulate.

2.21.2.5. When animals are used for vegetation control, avoid overgrazing on barricade surfaces and igloo earth cover to prevent erosion.

2.21.2.6. Where vegetation growth is ineffective in preventing erosion, use a layer of about two inches of pressure-applied (Gunite) concrete or asphalt mixture or other suitable erosion prevention methods.

2.21.3. Firebreaks. Where environmental and security factors allow, maintain 50-feet firebreaks around each PES except igloos. Maintain 5 feet around igloo ventilators.

2.21.4. Separation Criteria for Controlled Burning. Don't conduct controlled burning within 200 feet of any explosives location. The fire chief approves and provides oversight for controlled burning of vegetation. Close windows, doors and ventilators of facilities containing explosives within 600 feet of burning operations.

2.21.4.1. Control firebrands, sparks, and hot ashes.

2.21.4.2. Do not conduct burning operations when wind velocity exceeds or is forecast to exceed 5 miles per hour.

2.21.4.3. The fire chief determines fire-fighting personnel and equipment to be present during burning operations.

2.21.5. Flammable Liquids for Cleaning. Don't use flammable liquids for cleaning purposes within an explosives area or near explosives, except as authorized by TO. Confine use to specific designated work areas. In-use stocks may not exceed a one day supply. Store in approved safety containers or dispensers.

2.21.6. Paint and Other Flammable Materials. Store only small stocks of flammable materials, such as paints and solvents required to support explosives maintenance operations. AFOSH Standard 91-43, *Flammable and Combustible Liquids*, and TO 42A2-1-4, *Storage Control of Organic Coating Materials (Paints and Allied Materials)*, apply.

2.21.6.1. Do not store materials that add fuel sources, such as wood, paper, and rags with flammables.

2.21.6.2. Open containers of flammable materials only when in use.

2.21.6.3. For outdoor storage, place flammable materials in weatherproof containers.

2.21.6.4. Locate flammable storage at least 50 feet from explosives locations.

2.21.6.5. Comply with AFOSH Standard 91-43 when storing a limited supply of paint in individual rooms of explosives operating facilities.

2.21.6.6. Make available at least one fire extinguisher suitable for the type of material involved.

2.21.6.7. Store in approved flammable storage lockers, as required by AFOSH Standard 91-43.

2.21.7. Operating Support Equipment. Use the following guidance when operating support equipment (not including vehicles) powered by internal combustion engines. Operations in hardened aircraft shelters are exempt.

2.21.7.1. Locate equipment no less than 25 feet from explosives.

2.21.7.2. Place aircraft ground support equipment as far away as the length of the power cord, the length of the hose, or other equipment limitation will allow or as directed by applicable technical order.

2.21.7.2. (PACAF) The requirements of AFOSH 91-100, *Aircraft Flight Line - Ground Operations and Activities*, will be met when operating support equipment for aircraft operations.

2.21.7.3. Equipment may be closer provided adequate ventilation and a fire resistant dividing wall are provided.

2.21.7.4. Equipment designed into and installed as part of an operating or storage facility is exempt.

2.21.7.5. Don't refuel equipment within 100 feet of explosives.

2.21.8. Stacking Combustible Material. Use the following guidance:

2.21.8.1. Stack containers, dunnage, lumber and so forth in an orderly manner.

2.21.8.2. Limit stacks to 9,000 cubic feet.

2.21.8.3. Don't place bulk stacks of combustible materials closer than 100 feet from explosives locations.

2.21.8.4. If necessary, stack working quantities in the vicinity of explosives. Remove all of the material upon completion of the operation or at intervals that prevent hazardous accumulation.

2.21.8.5. Provide suitable fire protection equipment.

2.21.8.5. (PACAF) The authority having jurisdiction makes the final determination on fire protection equipment in the absence of regulatory guidance/requirements.

2.21.8.6. When needed to prepare for combat operations, temporarily stack in or near the explosives storage site those empty containers, dunnage, and lumber that cannot be removed while the work is in progress.

2.21.8.7. Keep stacks stable and separated as far as practical from operations.

2.22. Fire Extinguishers.

2.22.1. Unless otherwise directed by the fire chief, provide a minimum of two serviceable fire extinguishers, suitable for the hazards involved, for immediate use at any location where explosives are being handled. See paragraph **2.35.** for licensed locations.

2.22.1. (PACAF) Perform and document fire extinguisher inspections in accordance with AFOSH 91-56, *Fire Protection & Prevention*.

2.22.2. Ensure at least one fire extinguisher is available for each item of powered material handling equipment used to handle explosives. Individual fire extinguishers are not required for each piece of handling equipment during explosive operations if the requirements of paragraph **2.22.1.** are met; however, if handling equipment is used to transport explosives where a second fire extinguisher is not immediately available, two portable 2A:10BC rated extinguishers are required for the handling equipment.

2.22.3. Provide each explosives-laden vehicle used for transport at least two portable 2A:10BC rated extinguishers. If explosives laden vehicles are parked at an explosives location, additional fire extinguishers beyond those required in paragraph **2.22.1.** are not required. If the vehicle leaves the explosives location, additional extinguishers are required.

2.22.4. Provide flightline fire extinguishers for each aircraft according to munitions loading manuals, AFOSH Standard 91-56, *Fire Protection and Prevention*, and T.O. 00-25-172, *Ground Servicing of Aircraft and Static Grounding/Bonding.*.

2.23. Storing Water for Firefighting. Adequate water to fight fires must be available. The capacity of the water supplies will be determined by the authority having jurisdiction (see **Table 3.3.**, "Above Ground Utilities" and Note 24 for additional guidance).

2.24. Emergency Withdrawal Distances.

2.24.1. Essential Personnel. The on-scene commander, or senior ranking individual, determines who are essential emergency personnel and what distances they should maintain.

2.24.2. Non-Essential Personnel. For guidance on how far to withdraw non-essential personnel during fires involving explosives, use **Table 2.1.** When explosives are not involved in fire, such as dropped munitions or partially armed munitions, clear the area initially to a distance of 300 feet (125 feet for simulators and smoke producing devices). After evaluation of the situation, the on-scene commander may adjust the withdrawal distance for non-essential personnel. Nuclear weapons withdrawal distances are listed in TO 11N-20-11, *General Fire Fighting Guidance*.

2.24.3. Withdraw all non-essential personnel an initial distance of 500 feet for improvised explosive devices (IED) up to box size (large briefcase/package 2 cubic feet) and 1,000 feet for barrel size or vehicle type IEDs. On-scene authorities may expand/shrink this distance when the situational analysis warrants it.

2.25. On-Scene Placarding Guidance to Emergency Personnel. Signs are used as a back-up precaution for alerting response personnel that explosives or chemicals are present. Use DoD symbols when the explosives or chemicals are not in the transportation mode. Use Department of Transportation (DOT) placards for transporting explosives or chemicals. Signs are based on the hazard class/division of the explosives. TO 11A-1-46*, Fire Fighting Guidance, Transportation and Storage Management Data,* gives HC/D for each Air Force stocklisted munitions item. AFVA 91-216, **USAF Explosives Fire and Chemical Hazard Symbols**, is available through publication channels.

2.25.1. Explosives Fire Symbols. These symbols represent explosives divisions 1 through 4. See **Table 2.2.** for placarding divisions 5 and 6. The hazard decreases as the fire symbol number increases. The hazard is based on the burning or explosives characteristics of the material. Fire symbols do not apply to liquid propellants, except for symbol 1, which is used to indicate a detonation hazard of Group IV propellant. Fire protection for insensitive high explosives (both bulk and filled items) is based on their equivalent storage classification.

2.25.1.1. Placards representing each of the four fire symbols are distinctively shaped, with the division number shown (see **Figure 2.1.**).

2.25.1.2. The hazard and fire-fighting precautions for each symbol are summarized in **Table 2.2.**

2.25.2. Chemical Hazard Symbols. These symbols are used to identify sites which contain pyrotechnic and chemical munitions or agents.

2.25.2.1. Hazard symbols vary with the type of agent. These symbols are described in **Figure 2.2.**

2.25.2.2. The hazard each symbol represents and the fire-fighting precautions are summarized in **Table 2.3.**

2.25.3. Firefighting Direction Symbol. The "apply no water" sign is intended for use with hazardous materials where use of water may intensify the fire, increase the risk of explosion, or spread the fire. This symbol is described in **Figure 2.2.**

2.25.4. Symbol Dimensions. The dimensions shown in **Figure 2.1.** and **Figure 2.2.** are the normal minimum sizes. Half-size symbols may be used when applicable, such as on doors and lockers inside buildings and hangars.

Table 2.1. Minimum Withdrawal Distances (in feet) for Explosives Involved in Fire.
(All notes apply)

1.4	Minimum Distance		300
1.3	Minimum Distance		600
1.2(All) 1.6	Minimum Distance		2500
1.1 1.5	Unknown Quantity	Aircraft, Truck, Tractor, Trailer, Facility	4000
		Railcar	5000
	Transportation Known Quantity	500 lbs or less, all modes	2500
		More than 500 lbs, railcar	5000
		More than 500 lbs, all other modes including aircraft	4000
		All quantities bombs & explosives greater than 5 in. caliber	4000
	Facilities Known Quantity	15,000 lbs or less	2500
		More than 15,000 lbs, less than 55,285 lbs	4000
		More than 55,285	K105

NOTES:

1. For quantities of HC/D 1.3 over 100,000 lbs withdrawal distance is equal to K16.
2. When accidents occur and there is no fire, the on-scene commander will assess the risk and determine the withdrawal distance (see paragraph **2.24.**).

2.25.5. Obtaining Symbol Decals. Decals for fire and chemical hazard symbols may be obtained through normal Air Force supply channels. National stock numbers (NSN) of standard and half-size decals are listed in **Figure 2.1.** and **Figure 2.2.**

2.25.6. DOT Explosives Placards. Explosives placards used for transportation of explosives are identified in Subpart F of Title 49-Code of Federal Regulations (CFR) *Transportation*. Use these placards for the transportation of explosives as directed in paragraph **2.71.2.** See TO 11A-1-46 for the HC/D assigned to Air Forces titled munitions.

2.25.7. Posting Symbols. Post the fire symbol and/or chemical symbol that applies to the most hazardous material present at nonnuclear explosives locations (refer to **Table 2.2.** and **Table 2.3.** for applicable symbols). Ensure symbols are visible from all approach roads. When one fire symbol applies to all explosives within a storage area or on a service road, it may be posted at the entry control point or row entrance. Post individual fire/chemical hazard/apply-no-water symbols on each door of a multicube storage magazine when the multicube is sited as a multicube versus a single magazine. The

self contained breathing apparatus (SCBA) and other protective clothing and equipment prescribed for use in **Table 2.3.** are required for emergency response personnel (such as Fire Department and EOD) only. However, they must be used if required for use by other applicable technical orders or other DoD/USAF publications. See AFI 32-4002, *Hazardous Material Emergency Planning and Response Compliance,* for further guidance.

2.25.7.1. Post symbols on exterior and interior entrances to small rooms in buildings that are licensed for storing quantities of explosives. Also mark lockers or containers with the proper symbol. If the building is exempt from Q-D according to paragraph **2.35.**, and the fire chief approves, fire symbols on exterior of buildings are optional.

2.25.7.2. Identify aircraft loaded with nonnuclear weapons with symbols posted at each aircraft or aircraft shelter. One fire symbol may be posted at the entry point (point of entry for fire-fighting personnel) to an aircraft area; the fire symbol will be the highest class/division located within the aircraft area. Notify the Fire Alarm Communication Center (FACC) when each aircraft is loaded or unloaded. Give the aircraft tail number, parking location, and the type of explosives involved. During mass loading of three or more aircraft, when a fire truck is present, notify the FACC as soon as the last loading is complete.

2.25.7.3. Remove the symbols if the explosives or chemical agents are removed from a facility or location. The person in charge of the operation is responsible for posting or changing the symbols. The FACC will be notified each time fire or hazard symbols are changed.

Figure 2.1. Fire Symbols.

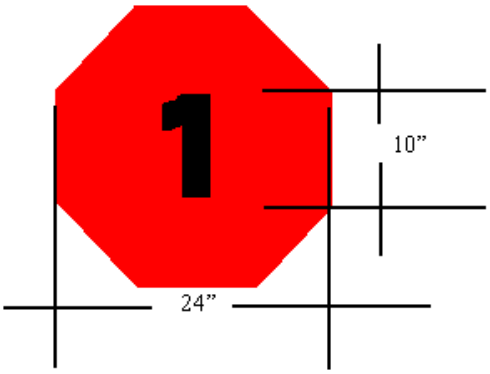

Fire Division 1 or 5

24” NSN 7690-01-082-0290
12” NSN 7690-01-081-9581

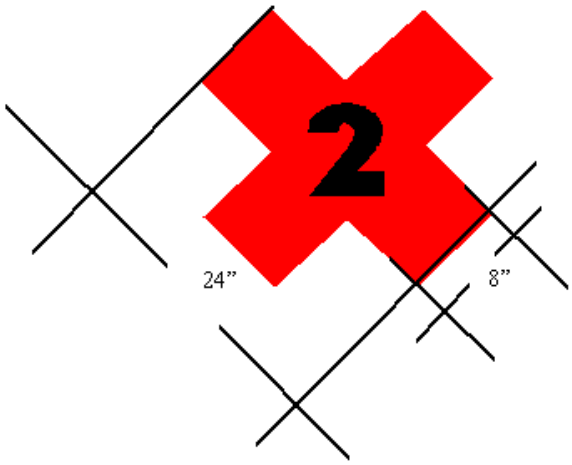

Fire Division 2 or 6

24” NSN 7690-01-082-0289
12” NSN 7690-01-087-7340

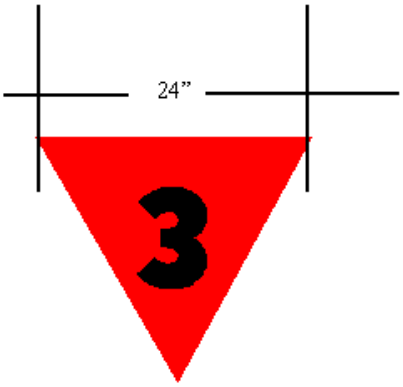

Fire Division 3

24” NSN 7690-01-081-9583
12” NSN 7690-01-383-2067

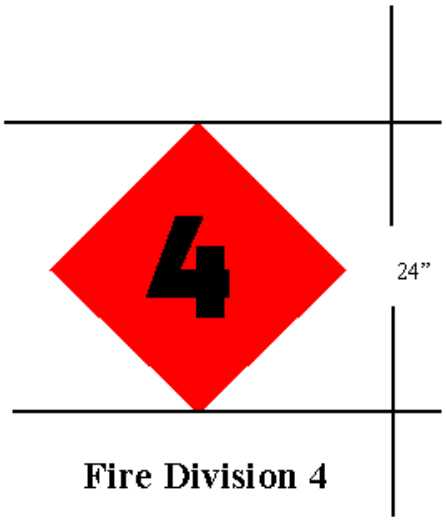

Fire Division 4

24” NSN 7690-01-082-6709
12” NSN 7690-01-081-9584

Background: Orange # 12240 (Fed. Std 595A)
Numbers: 10” High and 2” Thick: Black # 17039 (Fed. Std 595A)

Figure 2.2. Chemical Symbols.

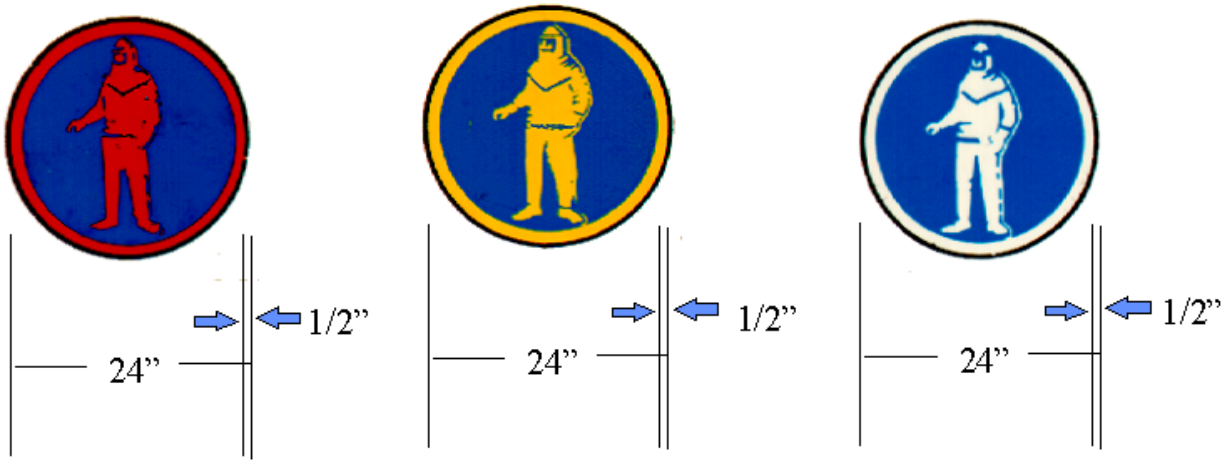

Symbol 1. Wear full protective clothing

Background is blue, Figure and rim are:

Red for Set 1 Protective Clothing.
24" NSN 7690-01-081-9586
12" NSN 7690-01-081-9585

Yellow for Set 2 Protective Clothing.
24" NSN 7690-01-081-9587
12" NSN 7690-01-082-0291

White for Set 3 Protective Clothing.
24" NSN 7690-01-083-6272
12" NSN 7690-01-081-9588

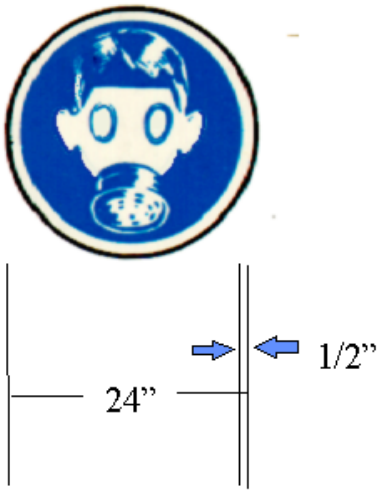

Symbol 2. Wear Breathing Apparatus

Background is blue
Figure and rim are white.
24" NSN 7690-01-081-9589
12" NSN 7690-01-082-6710

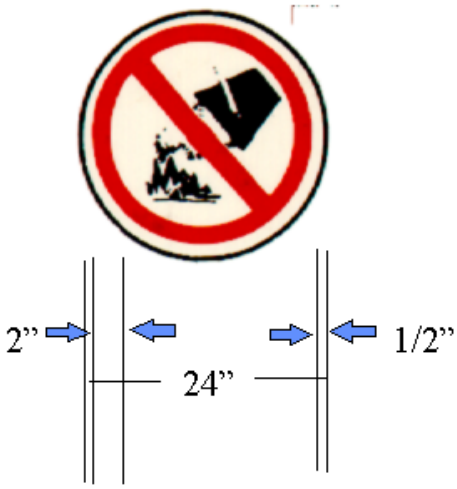

Symbol 3. Apply No Water

Background is white. Circle and diagonal are red. Figure is black.
24" NSN 7690-01-082-2254
12" NSN 7690-01-082-0292

Colors per Fed Std 595A or GSA Catalog

Red	#11105	Yellow	#13538
Blue	#15102	White	#17875
Black	#17038		

2.25.7.4. Make backing for fire symbol decals the shape of the decal and out of non-combustible material. If heat from the fire burns off the numbers, the fire department can act on the shape.

2.25.8. Exceptions to Posting Fire Symbols.

2.25.8.1. Locations with aircraft having only exempted devices according to paragraph **3.25.4.** This exception does not apply to explosives cargo.

2.25.8.2. Missile sites with a single type of weapon system, such as ICBM sites.

2.25.8.3. Locations with 1,000 rounds or less of HC/D1.4 small arms ammunition.

2.25.8.4. When, by agreement, host nation symbols are used.

2.25.8.5. When the responsible commander temporarily orders them removed for emergency security purposes.

2.25.8.6. Locations storing or maintaining nuclear weapons or both nuclear and nonnuclear weapons. Maintain a map or listing of munitions locations. For nuclear weapons use TO 11N-20-11, *General Firefighting Guidance,* line numbers or symbols. Provide this information to the Fire Department. Update as changes occur.

2.25.8.7. Aircraft loaded with nuclear weapons or with nonnuclear and nuclear weapons within the same designated area.

2.25.8.8. Aircraft in a designated explosives parking area if described in a local publication. Include the class/division, governing symbol, emergency procedures and the requirement to notify the Fire Department.

Table 2.2. Fire Symbol Hazards and Actions.

Fire Symbol	Materials	Hazard	Action/Remarks
1	1.1 Explosives and class IV liquid propellants and 1.5 munitions	Mass Detonation	1. Do not fight fire unless rescue attempt is planned. 2. If there is suitable separation to symbol 1 materials and fire chief approves, fire-fighting forces may attempt to extinguish the fire. 3. If personal safety is in doubt, take cover.
2	1.2 Ammunition and explosives and 1.6 extremely insensitive detonating substances (EIDS)	Explosion with Fragments	1. Give alarm; attempt to extinguish fire if in early stage. 2. Firefighting forces should fight fire. If not possible, prevent spread of fire. 3. Detonation of items could occur. Provide protection from fragments.
3	1.3 Ammunition and explosives	Mass Fire	1. May be fought if explosives not directly involved. 2. If WP munitions are involved, smoke is liberated. a. WP munitions may explode. b. Immerse Phosphorus in water or spray with water continuously. 3. For fires involving HC and incendiaries use dry sand or dry powder in early stage. 4. For fires involving pyrotechnics and magnesium incendiaries. a. Protect adjacent facilities and equipment. b. Do not use carbon dioxide, Halon extinguishers or water on or near munitions. c. Allow magnesium to cool unless upon flammable material. In this case, use a 2-inch layer of dry sand or powder on the floor and rake the burning material onto this layer and re-smother.
4	1.4 Ammunition and explosives	Moderate Fire	1. Fight these fires. 2. Expect minor explosions and hot fragments.

Table 2.3. Chemical Symbol Hazards and Actions.

Chemical Symbol	Name of Chemical Family	Comp Group	Type Agent	Back-Ground Color	Bands	Hazard	Action or Remarks
Full Protective Clothing- Set 1 (Red)[1]	Nitrogen Tetroxide (N_2O_4)	K	Fuel Oxidizer	None	None	Highly Toxic as aerosol/vapor	1. Withdraw upwind 2. If explosion does not occur, approach from upwind and extinguish fire. 3. Decontamination may be required.[10]
Full Protective Clothing- Set 2 (Yellow)[2]	Hydrazine (MMH), (UDMH)	K	Fuel	None	None	Toxic as aerosol/ vapor	1. Withdraw upwind 2. Approach from upwind and extinguish fire. 3. Decontamination may be required.[10]
	Chloroacetophenone (CN)[6][12]	G	Tear	Gray	Red		
	Liquid Chloroacetophenone (CN)[6][12]	G	Tear	Gray	Red		
	O-Chlorobenzal- Malononitrila[6][12] (CS), (CS1),(CS-2)	G	Tear	Gray	Red		
	Adamsite (DM)[6]	G	Vomiting	Gray	Red		
	Combination CN and DM [6].[12]	G	Tear and Vomiting	Gray	Red		
	Diphenylchloroarsine (DA)[6]	G	Vomiting	Gray	Red [5]		
	Titanium Tetrachloride (FM) [6]	G	Smoke	Lt Green	[5]		
	Sulfur Trioxide Chlorosulfonic Acid (FS)[6]	G	Smoke	Lt Green			
Full Protective Clothing- Set 3 (White)[3]	White Phosphorus (WP)[8] [9]	H	Smoke	Lt Green	[5]	Spontaneously flammable when exposed to air	1. Post fire guard until leaking phosphorus has been removed. 2. After removal of agents, post fire guard for two days for possible re-ignition.
	Plasticized White Phosphorus (PWP) [8] [9]	H	Smoke	Lt Green	[5]		
	Triethyl-Aluminum (TEA)[7][11]	L	Smoke	Lt Green	[5]		
Breathing Apparatus [4]	Signaling Smokes[4]	G	Smoke	Lt Green	[5]	Smoke, Burns at high temperature	1. Do not use water. 2. Do not look at burning material.
	Pyrotechnic Material (PT)[4][11]	G	Incendiary	Lt Red	[5]		
	Thermite (TH)[4][11]	G	Incendiary	Lt Red	[5]		
	Hexachloroethane (HC)[4] [11]	G	Smoke	Lt Green	[5]		
	Calcium Phosphide[4] [11]	L	Smoke	Lt Green	[5]		

NOTES:

1. Set 1 consists of self-contained breathing apparatus; impermeable suit or level A encapsulating suit IAW TO 14P3-1-7.
2. Set 2 consists of self-contained breathing apparatus; coveralls; protective gloves, or level B encapsulating suit.
3. Set 3 consists of flame resistant equipment and self-contained breathing apparatus. (Firefighting protective clothing and equipment are to be used where compatible with conditions of material or incident.)
4. "Wear Breathing Apparatus" consists of a self-contained breathing apparatus. (Firefighting protective clothing and equipment may be used.)

   (PACAF) When an item requires Set 1, 2, or 3 and Wear Breathing Apparatus symbols, posting the appropriate chemical hazard symbol (Set 1, 2, or 3) eliminates the requirement for Wear Breathing Apparatus symbol.
5. Refer to TO 11A-1-53 for smoke munitions not presently marked with bands.
6. Wear Set 2 protective equipment for emergency operations, when area contamination by an agent is suspected or when moving leaking items. Use to provide protection when removing a defective item from the vicinity of other explosives. (See paragraph **2.25.7.**)
7. Wear Set 3 protective equipment when area contamination by an agent is suspected or when moving leaking items. Use to provide protection when removing a defective item from the vicinity of other explosives. (See paragraph **2.25.7.**)
8. For emergency response forces during emergency situations and for personnel handling unpackaged WP items, flame proof gloves, face shield and covering for the skin must be available. Leaks can be detected immediately by the smoke arising from the item. The greatest hazard is fire. Promptly immerse the item in water. Non-emergency workers will evacuate the area and notify emergency response forces.
9. WP and PWP. Water supply, such as barrels, must be immediately available when handling unpackaged items. Propylene glycol (RV antifreeze) may be used in the water. Do not mix a solution with more than 22% propylene glycol. Solutions of greater than 22% propylene glycol can produce flammable vapors when heated. When WP and PWP items are properly packaged, a water supply, such as hydrants or fire trucks with water, must be available to emergency response forces.
10. For decontamination, the indicated protective clothing must be worn. Post the chemical hazard symbol (**Figure 2.2.**).
11. Also post the fire direction symbol for "Apply No Water." This requirement is based on possible violent chemical reaction or danger of spreading the fire. Limited amounts of this material, such as flares in a survival kit, may be stored or maintained in a facility protected by a fire suppression system if approved by the Fire Department.
12. Only the "Wear Breathing Apparatus" symbol needs be displayed where certain riot control agents are stored in arms rooms and similar locations.

Section 2C—Storage and Compatibility

2.26. Basic Criteria. Set aside a segregated area to store only ammunition and explosives, related non-explosives items, equipment and supplies.

2.26.1. Hazard Classification. Ammunition and explosives must have an assigned hazard classification for storage. This classification includes the Q-D hazard class/division and a storage compatibility group designation (TO 11A-1-47, *Explosives Hazard Classification Procedures*). TO 11A-1-46 and the Joint Hazard Classification System (JHCS) are the sources for final hazard classifications.

2.26.1.1. An interim hazard classification must be assigned for explosives items under development, test articles, components, and certain explosive commercial products having no final hazard classification if they will be stored on DoD property or transported (see TO 11A-1-47). See paragraph **2.26.5.** for exceptions. Interim hazard classified items will have the interim hazard classification letter included in storage and shipment documentation until the hazard classification is finalized. The agency obtaining the interim hazard classification must renew the interim hazard classification upon termination of the initial interim hazard classification if the item is still in the inventory or until final hazard classification is determined.

2.26.1.2. Place explosives items received without an assigned hazard classification in segregated storage (HC/D 1.1L). Contact HQ AFSC/SEW or OO-ALC/WMOI for assistance.

2.26.1.3. Research and development munitions must have EOD procedures available prior to use. The responsible test organization will ensure local EOD activities receive a Source Data Package (SDP) prior to delivery of test assets. The SDP will be developed according to DID DI-SAFT-80931 and TO 00-5-3 paragraph 12-5.

2.26.2. Don't store ammunition and explosives with unrelated items, except as authorized in this manual. MAJCOMs may authorize the storage of firearms in explosives storage areas to meet operational commitments.

2.26.2. (PACAF) MAJCOM authority is PACAF/LGW. Info PACAF/SEW with message traffic.

2.26.3. An ammunition item or component may have a hazard classification other than class 1 because hazard classifications are based on the predominant hazard (see paragraph **3.4.1.**).

2.26.3.1. When the predominant hazard *is not* an explosive reaction, class 1 will not be assigned even if the item contains a small amount of explosives. In this case the predominant hazard may be class 2 through 9 as identified in part 173, CFR 49. The inventory includes ammunition assigned to: Class 2 (compressed gas), Class 3 (flammable liquid), Class 4.1 (flammable solid), Class 5.1 (oxidizer), Class 6.1 (poisonous materials), and Class 8 (corrosive materials). The hazard presented by a non-class 1 ammunition items may be severe.

2.26.3.2. For Q-D purposes, a non-class 1 item containing explosives has an NEW of zero. Siting or licensing is not required for non-class 1 items that contain explosives.

2.26.3.3. Non-class 1 items, that contain an explosive substance, and that are allowed to be stored with explosives, will have a compatibility group designation in T.O. 11A-1-46 and JHCS, that governs mixed storage with class 1 items. The compatibility group to which a non-class 1 item is assigned does not apply for transportation. Items that contain a hazardous material, but that have been designated “Not Regulated,” do not require storage or handling as a hazardous material.

2.26.3.4. When non-class 1 hazardous items or materials are stored or used in a facility, without other items of class 1, identify the predominant hazard to guide emergency response personnel. In this case, placards are required in accordance with NFPA/OSHA regulations. (Do not display NFPA/OSHA placards concurrently with class 1 fire symbols.)

2.26.4. Explosives will not be taken into public assembly places except when required by essential mission needs or immediate security. Because of varying circumstances, authorization to carrying in use (except HC/D 1.1) ammunition into base facilities will be determined by MAJCOM and incorporated into the MAJCOM supplement to this manual.

2.26.4. (PACAF) Security Forces personnel may carry in-use ammunition (except (HC/D 1.1) into public assembly areas when required to meet essential mission needs. They may be brought into dining facilities provided rifles and grenades (40mm, M203, and M60) are placed into a rack and guarded by a Security Forces member while others go through the line.

2.26.5. Storage and Transportation without DoD Hazard Classification. Occasions may arise in which it is necessary to store, or offer for transportation by military or commercial carriers, explosive substances or articles containing explosives that do not have final or interim hazard classifications assigned by a DoD hazard classification authority. Since such items are not listed in TO 11A-1-46 or the JHCS, the unit having custody of the items must exercise care in maintaining appropriate approval and hazard classification documentation at the storage installation. Such documentation may include DOE interim hazard classifications, DOT EX-numbers, or locally assigned storage hazard classifications established in accordance with procedures approved by AFSC (see paragraph **2.26.5.4.** below). The following are the circumstances and the respective applicable conditions for storage or transportation of ammunition and explosives without DoD hazard classification:

2.26.5.1. An item covered by a DOE interim hazard classification may be stored and offered for military or commercial transportation using that classification, except for HC/D 1.2. Store items classed as HC/D 1.2 by DOE as DoD HC/D 1.1 or contact AFSC/SEWE (DSN 246-5658) to determine if a different classification might apply. A copy of the applicable DOE interim hazard classification must be maintained at the installation where the items are stored, and must be carried with shipping papers on board each conveyance being used to transport the items under the that interim hazard classification.

2.26.5.2. Items may be stored and offered for transportation using final hazard classifications assigned by DOE, except for HC/D 1.2. Store items classed as HC/D 1.2 as DoD HC/D 1.1 or contact AFSC/SEWE (DSN 246-5658) to determine if a different classification might apply. For storage using DOE final hazard classifications, installation records must reflect the DOT EX-number, Class, Division, Compatibility Group, and NEW for each item stored.

2.26.5.3. A unit may have a requirement to purchase a non-stock-listed commercial explosive product for evaluation or use. Prior to purchase, see applicable certification and approval requirements in paragraph **2.8.** Although such items are not standard military inventory items, they are DoD-owned explosives once purchased (see paragraph **1.3.** regarding non-DoD owned explosives). For purposes of this paragraph, commercial products are items that are not unique to military use and that are legally available for purchase and use by the general public or private businesses. Examples are commercial small arms ammunition, components and propellants; power tool cartridges; fire extinguisher cartridges; signal devices; pest control devices; theatrical special effects items; commercial demolition materials; and blasting agents. The unit may request

a DoD interim hazard classification for such an item. Alternatively, store and offer the item for military or commercial transportation using the classification assigned for the product by the U.S. DOT. The classification assigned to commercial small arms cartridges by the manufacturer as prescribed in 49 CFR 173.56(h) may also be used for storage and transportation without a DoD hazard classification. The following exceptions and conditions apply to storing and shipping commercial explosive products without DoD hazard classifications:

2.26.5.3.1. Commercial explosive items adopted as standard DoD inventory items, as evidenced by centralized item management by an Air Logistics Center or by another military service and assignment of a National Stock Number, must be covered by a DoD interim or final hazard classification.

2.26.5.3.2. Paragraph **2.26.5.3.** does not apply to commercial fireworks (see paragraph **2.9.**).

2.26.5.3.3. For storage using DOT classifications, installation files shall reflect the DOT EX-number, Class, Division, Compatibility Group, and NEW, for each item stored.

2.26.5.3.4. A commercial product received as Black Powder for Small Arms, Class 4.1, Identification Number NA0027, must be stored as Black Powder, HC/D 1.1D.

2.26.5.3.5. A commercial product received as Smokeless Powder for Small Arms, Class 4.1, Identification Number NA3178, must be stored as Powder, Smokeless, HC/D 1.3C.

2.26.5.3.6. A commercial product received as Cartridges, Small Arms. ORM-D, must be stored as HD 1.4C unless a different hazard classification is issued by a DoD or DOE interim hazard classification authority is on file at the installation.

2.26.5.3.7. Articles or substances hazard classified by DOT or DOE as HC/D 1.2 or HC/D 1.5 must be stored as HC/D 1.1 and in accordance with the compatibility group assigned by DOT or DOE.

2.26.5.3.8. For quantity-distance purposes, the NEWQD of articles hazard classified by DOT or DOE as HC/D 1.4 or as Non-Regulated will equal zero. For all other such articles, the NEWQD will equal the NEW.

2.26.5.3.9. All commercial articles or substances covered by this paragraph must be stored or transported in the same or equivalent packaging in which the manufacturer or vendor offers the items for transportation.

2.26.5.4. In manufacturing and research and development environments, explosives samples, substances, subassemblies, and items may be acquired or produced that must be stored without hazard classifications assigned by a DoD authority listed in TO 11A-1-47. Such items may be stored and transported on-base in accordance with locally assigned hazard classifications provided a formal procedure for establishing and documenting the hazard classifications is approved by AFSC/SEW (submit procedures for AFSC/SEW review through MAJCOM SEW). Unless such a substance or item is a commercial product that has been hazard classified by the U.S. DOT, it shall not be offered for transportation from the installation or development location until the necessary DoD interim hazard classification is assigned. (Traversing a public roadway between gates or sites on the same installation is considered on-base transportation provided the transportation is in a DoD-owned vehicle operated by DoD personnel.)

2.27. Requirements for Storage Locations. The following rules apply where explosives are stored:

2.27.1. Site explosives locations as prescribed in **Chapter 4**. Comply with Q-D criteria in **Chapter 3** and lightning protection in **Chapter 2**, **Section 2D**.

2.27.2. Practice good housekeeping in all locations.

2.27.3. When required to meet Q-D criteria, construct barricades according to paragraph **3.12.** Properly maintain barricades.

2.27.4. Provide adequate drainage for access and internal roads and all explosives locations.

2.27.5. Keep structures in good condition and suitable for the storage of munition types and hazard class/divisions involved. **2.27.6.** Provide at least 24 inches of earth cover on igloos and maintain so as to prevent erosion or fire hazards. If the igloo earth cover erodes to less than 24" repair as soon as practical (not to exceed 90 days) or classify as an aboveground unbarricaded magazine.

2.27.6. Ensure each storage space has ventilation or other suitable means of air circulation or dehumidification. Steel arch, earth covered igloos may be built without roof ventilators (for integrity of the faraday cage lightning protection system). Front wall ventilators are permitted.

2.27.6. (PACAF) Igloos will be inspected for sufficient earth covering annually in accordance with AFI 21-201, *Management and Maintenance of Nonnuclear Munitions*, paragraph 4.1.10.3, PACAF Supplement 1. The 90-day repair time will be based on the date the igloos are identified as having less than 24 inches of earth cover. Refer to AFI 21-201, PACAF Supplement 1, Attachment 9, for measurement diagram and sample format for documenting depth checks.

2.27.7. Where fusible links are installed, leave unpainted, and ensure they are serviceable, properly installed, and rated for a maximum temperature of 155° F to 165° F (NSN 4210-00-033-6032 or suitable substitute). Fusible links are designed to release the vent when an outside fire or source of heat threatens the igloo.

2.27.8. Check ventilators periodically to ensure they function properly. Ventilators may be closed where blowing snow or humid air would increase condensation. They may also be closed to protect supplies from blowing sand. Set up controls to make sure heat does not build up within the storage space.

2.27.9. Don't store powered lift trucks, dunnage, empty boxes, unused pallets, excess packing material or similar items in a magazine or other space containing explosives.

2.27.10. Store noncombustible equipment required to support approved contingency plans in explosives facilities for ready use when required.

2.27.11. Don't store flammable liquids in magazines or other locations where explosives are present. Ammunition containing flammable liquids, Group J, must be stored in accordance with **Table 2.4.**

2.27.12. Inert and live explosives or munitions components may be stored together. However, training items must be physically separated from the live items they represent.

2.28. Storage Magazines.

2.28.1. Earth-covered magazines (igloo or underground) are preferred for the storage of all explosives. Units may use other types of standard magazines which are built according to approved draw-

ings. Major commands may approve use of existing magazines of other descriptions (including contractors' facilities) if they provide the proper degree of protection and safety.

2.28.2. Any magazine or warehouse-type building that gives protection from the weather and meets Q-D and security requirements is allowed for storing explosives HC/D 1.3 and 1.4 material.

2.28.3. Indoor (magazine) storage is preferable for all types of explosives and is mandatory for bulk high explosives, solid propellants and pyrotechnics (see paragraph **3.21.** for exceptions).

2.28.4. Outdoor storage is considered a temporary expedient. Use only when approved by the MAJCOM. For high density storage needed in a limited land area, use the approved barricaded module, see paragraph **3.22.**

2.28.4. (PACAF) MAJCOM authority is PACAF/LGW. Info PACAF/SEW with message traffic.

2.28.5. Certain items which contain explosives have stringent temperature limitations (see applicable technical order). Take precautions to ensure these limits are not exceeded.

2.29. Explosives Stocks. Store stocks of explosives in their approved, properly marked, storage or shipping configuration. Keep outer containers in good condition and securely closed. Stacks of containers must be stable and arranged in magazines or other approved locations according to storage drawings or directives. If needed, store assembled items with compatible items and components. The following rules apply:

2.29.1. Provide ventilation for all parts of the stack by use of dunnage.

2.29.2. Maintain aisles so each stack may be inspected. Block storage is allowed if stack ventilation is maintained.

2.29.3. Only the explosives needed to ensure a safe and efficient work flow will be present in an operating building when operations are being conducted, this should normally be limited to a one day supply. This does not preclude storage in an operating building when operations are not being conducted, provided other storage criteria is met (see paragraph **2.27.**).

2.30. Damaged Containers and Unpackaged Items. Don't store loose explosives items, single inner packages (nonmetal) or explosives in unserviceable containers with properly packed items. Store in a magazine or space set aside for temporary storage awaiting disposition. Store nonstandard boxes of explosives with compatible and properly packed items. Keep boxes properly closed and clearly marked to show contents and quantity. Requirements of TO 11A-1-10, *General Instructions--Munitions Serviceability Procedures*, and the item TO apply.

2.31. Unserviceable Explosives Items.

2.31.1. When dangerously unserviceable items cannot be destroyed immediately, place them in an isolated location. Separate from other storage facilities by intermagazine distance. Dangerously unserviceable items are those which have a substantially greater probability of inadvertent or unintentional activation than a normal item. Examples would be partially or fully armed fuzes, exuding dynamite, or ruptured munitions with exposed explosives. Suspended munitions (code condition J) must not be used as test assets unless specifically authorized by the item manager.

2.31.2. Segregate other unserviceable items, including lots suspended from issue and use, from serviceable items. Put them in a separate facility or segregate them physically within the same facility. If

they remain in the same facility, clearly separate the unserviceable items using ropes, tape, painted lines or other highly visible means.

2.31.2. (PACAF) Activities other than MSAs, such as licensed locations, must turn in unserviceable/expended items to the base munitions activity within 7 duty days. If this turn-in period is exceeded, the using organization must maintain documentation as to why it could not be met (i.e. exercises, munitions inventory, etc.). Documentation will be maintained until items are turned-in. Wing Weapons Safety offices will coordinate on documentation.

2.31.3. Mark each package or stack to show its exact status. The markings must be clear to prevent inadvertent issue or loss of information.

2.31.4. Treat explosives of unknown hazard class/division as HC/D 1.1L. If local munitions or EOD experts can identify a *found-on-base* item sufficiently to determine that it is the same as stock listed, hazard classified items, they have the prerogative to store it accordingly. Ball cartridges, .50 cal and smaller, and all gages of shot-gun shells, may be treated as HC/D 1.4C unless 1.4S can be definitely established.

2.31.5. (Added-PACAF) Amnesty Boxes and Improvised Explosive Devices. Units responsible for the inspection of amnesty boxes will develop written procedures governing the inspection and handling of munitions found in amnesty boxes. Boxes must be placed at least 50 feet from combustible/hazardous materials and public traffic routes/gathering places. If improvised explosive devices (IED) are discovered, withdraw all non-essential personnel an initial distance of 500 feet for IEDs up to box size (large briefcase/package 2 cubic feet) and 1,000 feet for barrel size or vehicle type IEDs. On-scene authorities may expand/shrink this distance when the situational analysis warrants.

2.32. Authorized Operations in Storage Spaces Containing Explosives.

2.32.1. Palletizing, removing and replacing shipping crates incidental to transportation.

2.32.2. Replacing unserviceable strapping on boxes.

2.32.3. Necessary functional testing or sampling specifically authorized by technical data for performance in a storage location (e.g., example checking color-coded humidity indicators). Testing engineers will coordinate proposed testing and sampling authorizations with the Nonnuclear Munitions Safety Board.

2.32.4. Opening bolted or latched special storage containers housing self-contained weapons or missiles for authorized testing, missile reprogramming, sampling or transfer to transport trailer or vehicle and installing control surfaces and argon bottles on AIM-9 series missiles.

2.32.5. Minor repair, cleaning, painting or re-stenciling of all-up-rounds (AUR) or containers. Solvents and paints used must not create a hazardous or explosives atmosphere within the storage space. Bio-environmental or fire department services will evaluate the potential for hazardous or explosives atmospheres.

2.32.6. Removing bomb or cluster bomb unit (CBU) fuze well plugs for inspection if they can be easily unscrewed as prescribed in the TO. Remove plugs from the storage location for cleaning. If there is a binding of the plug or evidence of exposed explosives, move bombs to an operating location before starting repairs. Clean threads and cavities with approved cleaning solvents.

2.32.7. Opening outer containers for removal of inner packages. Complete any further processing of these items in an approved operating location.

2.32.8. Opening "lite" boxes for inventory purposes. Use of pneumatic nail guns is prohibited in explosives storage locations.

2.32.9. Opening containers of HC/D 1.4 explosives to allow inspection. Unpack, inspect, and repack in the storage location if storage is limited to HC/D 1.4 items.

2.32.10. Explosives are normally assembled in a properly sited operating building, preload facility or other designated separate facility or location. Use empty storage locations or structures for assembly and disassembly if they meet intraline criteria for operating locations (**Table 3.3.**).

2.32.11. Install only those fuzes authorized for prefuzing by TO 11A-1-63, *Munitions Assembly Procedures, Inspection and Assembly of Non-nuclear Munitions*, in the storage facility. Before moving prefuzed bombs, inspect for safe configuration.

2.32.12. Moving large missile motors involves increased risk because of the size of the motor and electrostatic discharge (ESD) concerns. Therefore, some repairs and minor modifications may be accomplished in missile storage facilities. A risk assessment, reviewed by weapons safety, must be accomplished showing the risk to move the motor is greater than the risk to do the work (see paragraph **2.91.**).

2.32.13. Nuclear weapons maintenance in a WSV-configured HAS, consistent with applicable weapon system safety rules.

2.32.14. Other operations as approved by AFSC/SEW based on a risk assessment and mission requirements. A formal deviation request is not required.

2.33. Repairing Containers. Except as allowed in paragraph **2.32.**, don't repair containers of explosives in magazines which contain other explosives. When maintenance and inspection facilities are not available, inspect and repair limited quantities in the open if the following distances are met: a minimum of 100 feet or intermagazine distance, whichever is greater, from aboveground magazines and the unbarricaded door end of earth-covered magazines (igloos); a minimum of 50 feet or intermagazine distance, whichever is greater, from barricaded sides of earth-covered magazines (igloos). Base distance on the quantity of explosives at the operation.

2.34. Repairing Explosives Facilities. Don't begin modifications and repairs to explosives facilities until supervisory and safety personnel decide whether the explosives must be removed. Don't repair the interior of a magazine that contains bulk explosives unless the explosives are physically protected and a hazard analysis shows there is no hazard to the explosives.

2.34.1. Requirements During Repair. During facility repairs, additional safety precautions are necessary.

2.34.1.1. Keep the floor clean and free of extraneous materials and equipment in the immediate area of the repair.

2.34.1.2. Don't use flame or heat-producing equipment inside a facility that contains explosives unless the contents are protected from the flame, sparks and heat by physical separation or shielding. Notify fire department before the repair operation. Don't use equipment outside if it would

expose the contents of the building to flame, sparks or other unfavorable conditions. Meet applicable requirements of AFOSH Standard 91-5, *Welding, Cutting, and Brazing*.

2.34.1.3. Inspect the facility during and after completion of the work. Keep melting pots or other heat-producing devices at least 100 feet from the explosives location. When needed, use baffles and screens to confine sparks and flames.

2.34.1.4. Brief personnel doing building or area maintenance on the hazards involved and precautions needed to perform the work safely, and actions to take in the event of an accident. This includes self-help projects.

2.34.1.5. If explosives remain in the facility and hazards warrant, trained explosives safety personnel must monitor repair activities for safety. The monitor will halt repair activities when, in his or her opinion, hazards are being created. The senior supervisor of the facility will resolve the problem before resuming operations.

2.35. Licensed Explosives Locations. Use AF Form 2047, **Explosive Facility License**, for ammunition and explosives storage locations (not for explosives operations), which are normally outside the base explosives storage area, but within the US Air Force Area of Control. Licenses to store munitions are requested from the installation or host safety office. Quantities of munitions depicted on the license are limited to minimum quantities necessary to support specific, mission essential, explosives operations or missions. Licenses are not to be used for convenience. Individual AF Forms 2047 must be signed by the requesting organization (see **Attachment 3**); coordinated through Munitions Accountable System Officer, the local Security Forces Resource Protection office and the Base Fire Protection agency prior to being signed by the Base Weapons Safety Office. Display licenses at the licensed facility.

2.35. (PACAF) The explosives facility licensing program is a responsibility of the Wing Weapons Safety Manager. Weapons Safety Managers may not detract from the licensing requirements of this manual; however, they may stipulate additional requirements in the interest of safety (i.e. licensing units with less than 1,000 rounds of small arms ammunition). See paragraph **2.54.1.8.8.** for lightning protection requirements.

2.35.1. Licensed Compatibility. Compatibility groups A, K, and L are not to be licensed. Compatibility requirements specified elsewhere in this manual do not apply.

2.35.2. Quantity Distance. Except for specific quantity distance requirements outlined below, quantity distance requirements depicted elsewhere in this manual do not apply.

2.35.2.1. Quantity distance is not a factor for any amount of licensed HC/D 1.4 explosives.

2.35.2.2. A minimum separation of 25 feet is required between licensed locations containing HC/D 1.3 explosives and adjacent explosives operations, personnel, or other licensed locations containing HC/D 1.3, (04)1.2, or 1.2.2. Where 25 feet cannot be obtained, a 2 hour fire wall, constructed in accordance with paragraph **4.19.** is required.

2.35.2.3. A minimum separation of 100 feet is required between licensed locations containing hazard class/division (04)1.2 or 1.2.2 explosives and adjacent explosives operations, personnel, or other licensed locations containing hazard class/division 1.3, (04)1.2 or 1.2.2 explosives. Where 100 feet cannot be maintained, a fragment barrier that provides protection equal to 1/4 inch mild steel plate or one layer of sand bags is required. A barrier or wall constructed in accordance with paragraph **4.20.** is acceptable without supporting analysis.

2.35.2.4. Combined storage of HC/D 1.2.2 or (04)1.2 and 1.3 is limited to 100 lbs NEW not to exceed 50 lbs HC/D1.2.

2.35.2.5. A fragment barrier consisting of either a 1/4 inch mild steel plate or one layer of sand bags is required when HC/D 1.2.2 or (04)1.2 is stored inside or IBD is not provided to other non related facilities.

2.35.2.6. Bird scare ammunition may be stored without NEW or round limits. All other provisions of this standard apply.

2.35.3. Maximum Licensed Quantities. The quantities of explosives, expressed as NEWQD may not be exceeded on any one license.

2.35.3.1. Mission essential quantities of hazard class/division 1.4 explosives.

2.35.3.2. Hazard class/division 1.3 explosives, 100 pounds NEWQD.

2.35.3.3. Hazard class/division 1.2.2 or (04)1.2, 50 pounds NEWQD.

2.35.3.4. Where hazard class/division 1.3 and 1.2.2 or (04)1.2 are licensed in the same location, the cumulative NEWQD is limited to 100 pounds, not to exceed 50 pounds HC/D 1.2.2 or (04)1.2.

2.35.4. Operations Involving Licensed Explosives. The unit/squadron commander (or equivalent) approves local written procedures (see paragraph **2.4.**) as the authorization for operations involving licensed explosives. An ESP is not required as a PES, but may be required as an ES if located within any other PES clear zone. Safe separation distances must meet the minimum distances specified in paragraph **2.35.2.** above.

2.35.4.1. The structure or room used for storage can be locked to prevent pilferage and unauthorized handling.

2.35.4.2. Fire and chemical symbols are posted in accordance with paragraph **2.25.7.1.**

2.35.4.3. When necessary use dunnage to provide ventilation around explosives stocks and protect them from moisture and heat buildup.

2.35.4.4. The base fire chief has coordinated on the license and included the type and quantity of fire extinguishers, their placement at the licensed location and any additional fire prevention practices.

2.35.4.5. Ensure approved operating procedures are available for the operation supported by the licensed location.

2.35.5. Mobility Storage. Explosives and chemical items designated for mobility should be stored within the base munitions storage area until ready for shipment (exception: deploying unit has an extremely short timeline requirement that makes it impossible to store within the MSA). Licensing pre-positioned mobility explosives is permitted if a properly sited area is not available. The license is valid only for the duration of the mobility tasking.

2.35.6. Exercises. Licensing munitions locations used solely for exercises, such as the ground burst simulators, smoke grenade storage, etc., is permitted. This license is valid only for the duration of the exercise.

2.35.6. (PACAF) Licenses issued solely for exercise-use munitions, such as GBS and smoke grenades, must state in the remarks section of the AF Form 2047 and in the applicable local written

instruction, *"FOR DURATION OF EXERCISE ONLY, Munitions will be returned to the munitions storage area within 3 calendar days of the end of each exercise."* Licenses need not be rescinded at the end of each exercise.

2.35.7. Validation and Inspection of Explosives Facility License. Base weapons safety personnel validate the license request and the quantity of explosives to be kept, ensuring only the smallest quantities needed to support requirements are authorized. Before granting the license, the installation weapons safety and security representatives must physically inspect the facility to ensure:

2.35.7.1. The structure or room used for storage can be locked to prevent pilferage and unauthorized handling. Contact Security Forces for resource protection requirements.

2.35.7.1. (PACAF) The security requirements in AFI 31-101, paragraph 23.3.3, must be met or a waiver must be requested through appropriate channels.

2.35.7.2. Fire and chemical symbols are available for posting in accordance with paragraph **2.25.7.1.**

2.35.7.3. When necessary use dunnage to provide ventilation around explosives stocks and protect them from moisture and heat buildup.

2.35.7.4. The base fire chief has coordinated on the license and included the type and quantity of fire extinguishers, their placement at the licensed location and any additional fire prevention practices.

2.35.8. Renew licenses each time a hazard class, type or quantity of explosives changes. Review each license at least annually for continued requirement and applicability. Revoke licenses when the requirement no longer exists. Ensure the user displays a copy of the license and operating procedures at each storage location. When Munitions Operations (AFK) issues suitable substitutions for stock listed items, revision and renewal of the license is not required as long as the hazard/ class division, NEWQD, compatibility group, and quantity does not change. Place an asterisk (*) next to the stock number listed in column "C" of the AF Form 2047 that is posted at the location and enter in the "Remarks" block, "*Suitable substitute issued."

2.36. Items or Situations not Requiring a License. Paragraph **2.35.** does not apply to the storage of small arms ammunition (.50 caliber or less), commercial maritime distress signals and like items held by base exchanges and individuals in family housing. However, if the base exchange stores primers and smokeless powder, complete a license and apply the limitations of paragraph **2.37.8.** This exception also applies to locations storing less than 1,000 rounds of HC/D 1.4 small arms ammunition or cartridges for cartridge actuated tools (up to 5,000 feet of shock tube) and locations storing thermal batteries. However, this exception for quantities less than 1,000 rounds of HC/D 1.4 does not apply to the on base storage of bird scare ammunition, privately owned ammunition belonging to dormitory and billeting residents; or approved commercial off-the-shelf explosives, except as noted in this manual. This ammunition will always be stored in approved, licensed explosives storage locations, regardless of quantity. See also paragraph **2.37.2.**

2.36. (PACAF) M142 Firing device and M5 Electric match and other shock tube initiating devices.

2.37. Safety Requirements for Specific Facilities and Explosives.

2.37.1. Control Tower. If required, store necessary quantities of HC/D 1.3 pyrotechnics needed to conduct emergency operations at fixed and mobile control towers. Don't load pyrotechnic projectors and pistols unless the operational situation demands a state of immediate readiness. The same safety requirements that apply to firearms apply. Give projectors and pistols the same security as small arms weapons. Place in a proper rack, locker, box or compartment to prevent damage, unauthorized handling, theft or accidental discharge.

2.37.2. Survival/Rescue Equipment. A license is not required for assembled parachutes, survival and rescue kits, life rafts and life preservers containing authorized explosives when kept in personnel equipment rooms or life raft, survival equipment and life support shops. A license will be required for those areas in which survival equipment explosive components are stored. An operating instruction, approved by the commander (see paragraph **2.4.**), is required for all survival/rescue shop operations involving explosive components.

2.37.3. Riot Control Items. If required, store riot control and smoke grenades (except white phosphorus "WP" grenades) with small arms ammunition in arms rooms and other such locations. However, if the arms room is collocated with a facility where personnel are under physical restraint or confinement, the National Fire Codes, Standard 101, Life Safety Code, applies. Don't store 40 millimeter grenades, pyrotechnics, tear gas or chemical irritants in the room regardless of the Q-D class/division or compatibility, unless the arms room has protective features which completely protect detainees from the effects of accidental explosives activation. Protective features include fragment barriers, blast doors, and exhaust fans. Qualified engineers must evaluate capabilities of protective features. Limit the quantity to the smallest amount needed to support approved contingency plans.

2.37.4. Egress Systems Maintenance Shops. When necessary, units may license a limited quantity of in-use egress explosive components of any class/division (including HC/D 1.1) in the egress shop after removal from aircraft undergoing maintenance. Don't exceed the total number of complete sets for the number of aircraft in maintenance. The following special provisions apply:

2.37.4.1. Ejection seats, canopies, and explosives components not undergoing actual maintenance, will be stored in a separate location other than within the maintenance area. Ejection seats may only be stored in the maintenance area while maintenance is being conducted on other seats, if all explosive components have been removed from the seats to be stored and placed in a separate storage location.

2.37.4.2. Within the egress maintenance work area, the NEW limitations in paragraph **2.35.** apply to the number of seats and spare components undergoing maintenance at any one time.

2.37.4.3. Turn in unserviceable explosive components/items to the base munitions storage area as quickly as possible to preclude build-up of unserviceable NEWQD. Unserviceable NEWQD must be counted against the total NEWQD of the licensed facility.

2.37.4.3. (PACAF) Reference paragraph **2.31.2.** of this supplement.

2.37.5. Gun Systems and Maintenance Shops. When possible, remove ammunition from guns and gun systems before they are brought into a weapons maintenance facility for repair. Gun systems using drums don't require removal of ammunition if the feed system is mechanically safed to prevent ammunition from feeding into gun. Q-D requirements do not apply to gun system maintenance oper-

ations when explosives are limited to HC/D 1.4 and 50 pounds of HC/D 1.2.2 or (04) 1.2 provided the using organizations ensure:

2.37.5.1. MAJCOMs will establish procedures for clearing jammed guns. Consider both active and contingency bases.

2.37.5.2. Guns or gun systems loaded with ammunition will not be brought into the maintenance facility until needed to meet the work schedule and are removed immediately after repair.

2.37.5.3. Precautions are established to prevent inadvertent firing.

2.37.5.4. Gun systems with live ammunition are grounded.

2.37.5.5. Gun system is pointed in the least hazardous direction.

2.37.5.6. Downloaded ammunition is removed from the building and returned to the base munitions storage area as soon as possible.

2.37.5.6. (PACAF) Licensing is required when written procedures are not established to return downloaded ammunition to the MSA within 24 hours.

2.37.5.7. Compliance with general explosives safety standards.

2.37.6. Incendiary Equipment and Document Destroyers. If necessary, store these items near the planned point of use to comply with emergency destruction plans. Establish quantities for each location by coordinating with base explosives safety representatives and your security representatives. The 100-pound HC/D1.3 limit does not apply in this case. Limit quantity to the amount needed for emergency destruction plans. Training quantities are not authorized. Construct or protect storage rooms with noncombustible or fire-resistive material. If possible store in nearby small low-cost structures (sheds, conex, etc.). Ensure adequate ventilation is provided. Maintain 50-foot firebreaks or vegetation control zones and locate at least 75 feet from any other building. Store replacement stocks in the base explosives storage area. Only trained personnel are allowed to prepare and activate these devices.

2.37.6. (PACAF) Explosive Ordnance Disposal (EOD) or other qualified source will provide training annually, as determined by the local weapons safety office.

2.37.7. Rod and Gun Clubs. License the explosives storage locations for clubs that handload ammunition on Air Force property. For skeet and trap ranges adhere to criteria established by the National Skeet Shooting Association. See also paragraph **2.37.8.** and **2.37.9.** Designate a qualified member to identify and enforce criteria.

2.37.8. Retail Stores. Where only retail sales are made, paragraph **2.35.** applies. Don't complete a license unless the store sells primers and smokeless powder. More than 100 lbs of propellant and 25,000 primers, packed in their shipping containers, may be licensed if they are segregated in such a way that the maximum credible event (MCE) does not exceed 100 pounds of propellant and 25,000 primers, i.e., IM separation is met. Don't place HC/D 1.3 propellant in other containers if it would result in extreme confinement in the event of ignition. Use fire symbol 3 to designate the presence of both the propellant and primers. Keep the symbol posted during temporary periods when the propellant has been sold out, but primers are still in stock.

2.37.9. Hand Loading. Conduct hand loading operations in a room or building used solely for this purpose. Don't store or reload ammunition in dormitories or bachelor officer quarters. Use retail store safety requirements as well as the following:

2.37.9.1. Develop and post an approved local written procedure. Refer to AFI 31-209, *The Air Force Resource Protection Program,* for security.

2.37.9.2. Grant loading privileges to only authorized personnel, trained in the use of hand loading equipment, safety provisions, and hazards involved. Wear safety goggles or face shields during all loading operations.

2.37.9.3. Strictly supervise members in training. Keep a log showing names of certifying instructors and each person who has satisfactorily completed the training.

2.37.9.4. Do not permit smoking, matches or flame-producing devices in any loading or storage location.

2.37.9.5. Place a ground bar with a resistance of 25 ohms or less at each entrance to the hand loading room.

2.37.9.6. Post a sign requiring each person to touch the ground bar before entering the room.

2.37.9.7. Maintain and inspect the ground bar as outlined in **Section 2D**.

2.37.9.8. Post explosives and personnel limits. Allow no more than 10 pounds of propellants, 10,000 primers, and 5,000 assembled rounds in the hand loading room at one time. These quantities are considered as part of the overall limits for the building.

2.37.9.9. Provide storage lockers for propellant and transfer to the loading point only quantities required to sustain a continuous operation.

2.37.9.10. Remove only one packing tray at a time from primer storage.

2.37.9.11. Repack unused components in their original containers and return to the storage locker at the end of each loading operation.

2.37.9.12. Lock unused lockers.

2.37.9.13. Cover tables used for hand loading with a seamless, nonporous, non-sparking conductive material.

2.37.9.14. Permanently attach and bond hand-loading equipment to a 25 ohm or less grounded table top.

2.37.9.15. Test the grounding system twice a year and when broken connectors are repaired.

2.37.9.16. Document grounding system test results.

2.37.9.17. Visually inspect ground conductors before each day's operation.

2.37.9.18. Keep floors and walls free of cracks that could accumulate explosive dust and foreign materials. Observe good housekeeping practices at all times.

2.37.9.19. In case of a spill, stop all operations until the propellant is cleaned up.

2.37.9.20. Put all salvaged propellant in a metal container that contains water and is marked "Scrap Explosives."

2.37.9.21. Put all damaged components or complete rounds in separate, properly marked containers.

2.37.9.22. Separate unserviceable items from serviceable stocks.

2.37.9.23. Qualified personnel must dispose of unserviceable propellants, damaged rounds or components and empty explosives containers as directed in TOs 11A-1-42, *General Instructions for Disposal of Conventional Munitions*, and 11A-1-60, *Inspection of Reusable Munitions Containers and Scrap Material*.

2.37.9.24. Use only commercial-type loading tools, dies, scales, powder measures, and so forth for hand loading operations.

2.37.9.25. Place personnel protection shields between each piece of permanently attached hand loading equipment. Shields must be large enough to protect adjacent personnel. Shields can be made of plywood, Plexiglas or similar materials.

2.37.9.26. Do bullet molding outside the hand loading room.

2.37.10. Morale, Welfare, and Recreation (MWR) Activities. MWR activities such as aero clubs and boating activities are sometimes required to maintain and store commercial pyrotechnic signals. Control and store these items using the same criteria as the military item which they resemble. Ensure personnel are properly trained. License the storage locations using paragraph **2.35.** Technical data or manufacturer's data are sources for local written procedures.

2.37.11. Minuteman Handling Team (MHT) Facility. The transporter erector (TE) tractor or autocar with missile in tow may require temporary storage in the MHT facility. When using this procedure, comply with the following conditions:

2.37.11.1. Storage is essential to meet operating requirements.

2.37.11.2. Vehicle is chocked and grounded.

2.37.11.3. Vehicle safety inspection is performed and no safety deficiencies exist.

2.37.12. Flightline Munitions Holding Areas. Identify these areas by a physical boundary (such as rope and stanchions). Post signs to keep unauthorized personnel out of the area and to prohibit smoking within 50 feet. Post explosives limits and ensure authorizations are not exceeded. Provide fire extinguishers and post fire symbols. If providing permanent shelter for personnel, position missiles so the shelter is out of radial alignment with the warheads. Secure according to AFI 31-101 and DoD 5100.76-M, or return munitions to MSA for storage.

2.37.13. Research and Development Laboratories for Specific Experiments. When necessary, units may license a limited quantity, not to exceed 200 grams in each licensed location, of HC/D 1.1 material for research use in laboratories. Licensing explosives used solely for a research project is allowed only for the length of the project. Commander approved local written procedures are required for the explosives operation.

2.38. Base Defense Support Munitions for Dispersed Locations. When required for defense against hostile forces, preposition base defense explosives stocks in licensed temporary magazines.

2.38.1. Store and protect licensed facilities and stocks as stated below:

2.38.1.1. Provide ventilation for all items stored.

2.38.1.2. If necessary, omit fire and hazard symbols if needed to avoid attention of hostile forces. Post "No Smoking" signs and keep the fire department informed of each facility's location and type of explosives.

2.38.1.3. Follow the instructions in paragraphs **2.35.** and **2.37.** if the facility is stocked with HC/D 1.2, 1.3, 1.4, and riot control items.

2.38.1.4. Site plans must be submitted for HC/D 1.1 items (see **Chapter 4**, **Section 4A**).

2.39. Toxic Substances. Store riot control, smoke, spontaneously flammable and incendiary items in any approved aboveground explosives storage facility. Underground facilities must be single-chambered sites. They must comply with storage compatibility and Q-D requirements.

2.39.1. Incendiaries and smokes are primarily a fire hazard, but inhaled fumes may cause respiratory problems. Looking at burning munitions which contain magnesium or thermite may impair vision.

2.39.2. Riot control agents may cause temporary irritation of the eyes or respiratory system. Unprotected personnel may be incapacitated until removed from the agent source. Normally, clean air will relieve the symptoms in a short period of time.

2.40. Dividing Walls. These walls are one way of separating explosives into smaller groups to minimize the effects of an explosion and allow a reduction in Q-D separation. They may also be used to separate stocks of munitions to ensure compliance with compatibility requirements. To receive credit as a dividing wall, reinforced concrete walls must either meet Substantial Dividing Wall criteria or be designed in accordance with the criteria in TM5-1300, *Structures to Resist the Effects of Accidental Explosions*. Dividing walls filled with earth or sand, used to compartmentalize magazines must be at least 5 feet thick with earth or sand packed between retaining walls. Sand-bag type dividing walls will be at least 5 feet thick, except where approved for other uses as in TO 11N-20-7. The following Air National Guard Multi-Barricade Storage Cells may be used as dividing walls for approved munitions. Drawing numbers: ANG-DWG-94-001, ANG-DWG-94-002 and ANG-DWG-96-001. Drawings and list of approved munitions can be obtained from HQ ANG/SEW, 3500 Fetchet Ave, Andrews AFB, MD 20331-5157.

2.41. Multicube or Segregated Magazines. Magazines with a 12-inch reinforced concrete substantial dividing wall or equivalent protection (see paragraph **2.40.**) may store up to 425 pounds of HC/D 1.1 explosives per cell without totaling the NEW of the entire facility or requiring storage compatibility with adjacent cells. Store explosives a minimum of 3 feet from any dividing wall, unless an engineering analysis of the wall show a lesser distance is adequate. If the 425 pounds NEW limit is exceeded in any one cell, compatibility must be maintained throughout the facility and the total NEW of all cells is used to compute Q-D requirements. See paragraph **3.8.3.** for rules when combining mass-detonating with non-mass detonating explosives.

2.41.1. Cells with 12-inch reinforced concrete substantial dividing walls or equivalent protection may be filled to capacity with HC/D 1.2.2 and 1.2.3 items. This also applies to HC/D 1.2.1 items if there is a 3 feet stand off and the NEWQD per package is less than 100 pounds. Also the Maximum Credible Event (MCE) must be less than 425 pounds. See paragraph **3.5.2.3.** for determining MCE. When using the provisions in this subparagraph, each cell may be considered a separate facility with equivalent IM distance between cells, for determining NEWQD in Q-D calculations.

2.41.2. For HC/D 1.3, if the substantial dividing wall extends through the outside roof it may be used to provide equivalent intraline protection for 5,000 pounds of HC/D 1.3 if packaged in its shipping/transportation configuration and 300 pounds of HC/D 1.3 if it is not properly packaged. If the substantial dividing wall goes up to the ceiling, but not through the roof, only intermagazine protection is provided by the walls for 5,000 pounds properly packaged HC/D 1.3 and 300 pounds NEW unpackaged. Intraline separation must be used if operations are involved.

2.42. Compatibility of Ammunition and Explosive Items.

Ammunition and explosive items are assigned to compatibility groups for storage and transportation. Ideally, each type item or division should be separated, but this is generally not feasible. Therefore, a proper balance of safety and other factors may require a combination of various types of ammunition and explosives in storage and transportation.

2.42.1. If different types of ammunition and explosives, by item and division, are compatible, they may be kept together. In developing the various compatibility groups, these factors are considered:

2.42.1.1. Chemical and physical properties.

2.42.1.2. Design characteristics.

2.42.1.3. Inner and outer packaging configurations.

2.42.1.4. Q-D class/divisions.

2.42.1.5. NEW.

2.42.1.6. Rate of deterioration.

2.42.1.7. Sensitivity to initiation.

2.42.1.8. Effects of deflagration, explosion, or detonation.

2.42.2. Compatibility groups for Air Force approved ammunition and explosive items, components, and assembled weapons are given in TO 11A-1-46. Items with interim hazard classification will have the compatibility group included in the interim hazard classification letter for the item.

2.42.3. When intransit explosives shipments are stored temporarily, the criteria in Title 49, Code of Federal Regulations (CFR), *Hazardous Materials Regulation, Transportation*, or **Table 2.4.** may be used. Do not store other dangerous articles with these explosives.

2.42.3.1. Transportation compatibility criteria in Title 49, CFR, or **Table 2.4.** may be used for shipments of DOD explosives in DOD vehicles operated by DOD personnel. Commercial shipments must comply with Title 49, CFR, *Hazardous Materials Regulation, Transportation*.

2.42.3.2. This does not prohibit developing new items in an increased state of assembly or shipping an assembled version of existing items. Shipment of assembled items on trailers or in special containers will require a safety analysis and approval by the Nonnuclear Munitions Safety Board. Hazard classification actions will be processed according to the procedures in TO 11A-1-47.

2.42.4. Compatibility Groups. Ammunition and explosives are assigned to one of thirteen compatibility groups (A through H, J, K, L, N, and S). These groups have the following characteristics:

2.42.4.1. Group A. Initiating explosives: These are bulk explosives with the necessary sensitivity to heat, friction, or percussion that makes them suitable as initiating elements in an explosives

train. Examples: Wet lead azide, wet lead styphnate, wet mercury fulminate, wet tetracene, dry RDX, and dry PETN.

2.42.4.2. Group B. Detonators and similar initiating devices: These are items which contain initiating explosives that are designed to start or continue the functioning of an explosives train. Examples: Detonators, blasting caps, small arms primers, and detonating fuzes without two or more safety features.

2.42.4.3. Group C. Bulk propellants, propelling charges, and devices containing propellant, with or without their own means of ignition: These are items that will deflagrate, explode, or detonate upon initiation. Liquid propellants are not included. Examples: Single, double, and triple base and composite propellants, rocket motors (solid propellant, and ammunition with inert projectiles).

2.42.4.4. Group D. Black powder, high explosives (HE), ammunition containing HE without its own means of initiation and without propelling charge, and fuzes with two or more safety features: These are ammunition and explosive items that can be expected to explode or detonate when any given item or any of its components are initiated. Examples: Bulk TNT, Comp B, black powder, wet RDX or PETN, bombs, projectiles, and CBUs.

2.42.4.5. Group E. Ammunition containing HE without its own means of initiation and with propelling charge (other than one containing a flammable or hypergolic liquid). Examples: artillery ammunition, rockets, and guided missiles.

2.42.4.6. Group F. Ammunition containing HE with its own means of initiation and with a propelling charge (other than one containing a flammable or hypergolic liquid) or without propelling charges. ***NOTE:*** As used in groups D, E, and F, "with its own means of initiation" indicates that the ammunition has its normal initiating device assembled to it, and this device is considered to present a significant risk. However, the term does not apply when the initiating device is packaged so there is no risk of detonating the ammunition if the device functions accidentally. It also does not apply when fuzed end items are configured and packaged so that they cannot be armed.

2.42.4.6.1. Initiating devices may be assembled to the ammunition when their safety features preclude initiation or detonation of the end item if the initiating device functions accidentally. In this case, the item is considered to be "without its own means of initiation." For example, hand grenades are considered "with their own means of initiation" because the fuze has no out-of-line component. It will detonate the grenade if the fuze is initiated. Conversely, 20 millimeter (mm) high explosive incendiary (HEI) ammunition is considered to be "without its own means of initiation" because the fuze, if initiated, will not detonate the projectile because of the out-of-line rotor.

2.42.4.7. Group G--Fireworks, Illuminating, Incendiary, Smoke (Including HC), or Tear-Producing Munitions Other Than Those Munitions That Are Water-Activated, or Which Contain WP, or Flammable Liquid or Gel. These are ammunition items which upon functioning, cause an incendiary, illumination, lachrymation (tear gas), smoke, or sound effect. Examples: Flares, signals, incendiary or illuminating ammunition, smoke, or tear-producing devices.

2.42.4.8. Group H--Ammunition Containing Both Explosives and WP or Other Pyrophoric Material. These are ammunition items which contain fillers that are spontaneously flammable when exposed to the atmosphere. Examples: WP, plasticized white phosphorus (PWP), and other ammunition containing pyrophoric material.

2.42.4.9. Group J--Ammunition Containing Both Explosives and Flammable Liquids or Gels. These are ammunition items which contain flammable liquids or gels other than those which are spontaneously flammable when exposed to water or the atmosphere. Napalm-filled fire bombs, with or without explosive components, are included in this group.

2.42.4.10. Group K--Ammunition Containing Both Explosives and Toxic Chemical Agents. These are ammunition items which contain chemicals specifically designed for incapacitating effects more severe than lachrymation. See restrictions in **Table 2.4.** note 4.

2.42.4.11. Group L--Ammunition Not Included in Other Compatibility Groups. These are ammunition items that cannot be commingled with any other type of ammunition or explosives, or dissimilar ammunition of this same group. Examples: Water-activated devices, prepackaged hypergolic liquid-fueled rocket engines, fuel-air-explosives (FAE) devices, and pyrophorics such as TEA (triethylaluminum) or TPA (thickened triethylaluminum). This group also includes damaged or suspect ammunition or explosives of any other group. Types presenting similar hazards may be mixed together but not with other groups.

2.42.4.12. Group N--Articles containing only extremely insensitive detonating substances.

2.42.4.13. Group S--Ammunition Presenting No Significant Hazard. These are ammunition items packaged or designed to confine hazardous effects arising from accidental functioning within the package, unless the package has been degraded by fire. In this case, all blast or fragmentation effects are limited so they do not significantly hinder firefighting. Examples: thermal batteries, explosive switches or valves, and other ammunition items packaged to meet the criteria of the compatibility group.

2.43. Mixed Compatibility. Compatibility groups may be combined in storage and during transportation as shown in **Table 2.4.** and paragraph **2.64.** respectively.

2.44. Exceptions to Compatibility. Compatibility grouping only applies to storage and transportation. However, it does not apply during transportation of munitions to or from combat aircraft loading areas or flightline munitions holding areas.

Table 2.4. Storage Compatibility Mixing Chart All notes apply

Group	A	B	C	D	E	F	G	H	J	K	L	N	S
A	**X**	**Z**											
B	**Z**	**X**	**Z**	**Z**	**Z**	**Z**	**Z**	**Z**	**Z**			**X**	**X**
C		**Z**	**X**	**X**	**X**	**Z**	**Z**	**Z**	**Z**			**X**	**X**
D		**Z**	**X**	**X**	**X**	**Z**	**Z**	**Z**	**Z**			**X**	**X**
E		**Z**	**X**	**X**	**X**	**Z**	**Z**	**Z**	**Z**			**X**	**X**
F		**Z**	**Z**	**Z**	**Z**	**X**	**Z**	**Z**	**Z**			**Z**	**X**
G		**Z**	**Z**	**Z**	**Z**	**Z**	**X**	**Z**	**Z**			**Z**	**X**
H		**Z**	**Z**	**Z**	**Z**	**Z**	**Z**	**X**	**Z**			**Z**	**X**
J		**Z**	**Z**	**Z**	**Z**	**Z**	**Z**	**Z**	**X**			**Z**	**X**
K(6)													
L													
N		**X**	**X**	**X**	**X**	**Z**	**Z**	**Z**	**Z**			**X**	**X**
S		**X**	**X**	**X**	**X**	**X**	**X**	**X**	**X**			**X**	**X**

NOTES:

1. "X" at an intersection means that those groups may be combined. Otherwise, mixing is prohibited or restricted.

2. "Z" at an intersection means that limited quantities (less than 1,000 lbs total NEWQD) of mission essential items may be mixed. This mixing is approved only when operational considerations or lack of magazine space warrant it, and when safety is not sacrificed. Approval must be in writing from at least the munitions storage area commander. These items must be kept packaged according to DOT shipping container specifications of Special Packaging Instructions, or equivalent. Also, these items will not be opened in the magazine for the purpose of issuing unpackaged munitions. Outer containers may be opened only for actions specified under paragraphs **2.32.7.** through **2.32.9.** Examples of acceptable combinations of class 1 are:

   a. Division 1, group A, initiating explosives with division 1, group B, fuzes not containing two or more independent safety features.

   b. Ammunition items without explosives which contain substances belonging to another hazard class may be assigned to the same compatibility group of items containing explosives and the same substance. Both items may be stored together.

   (PACAF) Forward the MSA commander's approval to PACAF/LGW for final approval. Provide info copy to PACAF/SEW.

3. When applying note 2, articles of compatibility groups B and F will each be segregated in storage from articles of other compatibility groups. Separate by means that will prevent the propagation of Group B or F articles to articles of other compatibility groups. A sand bag wall at least one foot thick and high enough to prevent line of sight exposure will provide this protection.

4. Articles in group L must be segregated in a separate facility or meet the requirements of paragraph **2.41.** Group L articles are not compatible with other articles in group L unless they are identical items.
5. Equal numbers of separately packaged components of complete rounds of any single type of ammunition (i.e., missiles, GP bombs) may be stored together. They may also be stored with assembled rounds made up from these components. When so stored, the compatibility will be that of the assembled round. That is, group H for WP rounds; group D, E, or F, as appropriate, for HE rounds. (The "equal number" provision is intended to limit the material stored to enough packaged components to make up the desired number of complete rounds. It is not necessary to unpack extra components from normal packaging to make an "equal numbers" condition.
6. Group K items cannot be mixed with other groups. Also, some group K items cannot be mixed with different items within the same group K. HQ AFSC/SE will determine which items under group K may be mixed with other items and which must be kept separate when such a requirement develops.
7. Ammunition designated "Practice" or "Target Practice" by National Stock Number and nomenclature may be combined with the fully loaded ammunition that it simulates (e.g., 2.75-inch target practice (TP) rockets with WP rockets).

Section 2D—Electrical Hazards

2.45. General Information. The installation and use of electrical equipment within explosives buildings, magazines, operating locations, shelters, etc., will comply with, as a minimum, the National Fire Protection Association, Standard 70 (NFPA 70) and AFI 32-1065. NFPA 70 is also known as the National Electric Code (NEC). In planning installation of electrical equipment in hazardous locations, it is often possible to reduce the quantity of special equipment needed by placing the equipment in less hazardous areas.

2.46. Hazardous Locations. The presence of explosives does not necessarily make an area a "hazardous location" with respect to electrical equipment or wiring. To qualify as a "hazardous location," conditions listed in **2.46.1.** through **2.46.3.** below should either exist or be probable under operational or accidental situations. Some specific definitive drawings for explosives facilities require the installation of certain basic electrical equipment meeting parts of the code. Hazardous locations are divided into three classes. Each class is broken down into two divisions: Division 1 (the more hazardous) and Division 2. For additional information, see the NEC.

2.46.1. Class I. A location where enough flammable gases or vapors exist, or may be present in the air to produce explosive or ignitable mixtures. A room or building that contains vapors from explosives will be considered a Class I hazardous location.

2.46.2. Class II. A location which is hazardous because of the presence of combustible dust. For example, a room or building that contains explosive dust whose size or chemical composition is such that particles may disperse to create an explosive atmosphere.

2.46.3. Class III. A location which is hazardous because of the presence of easily ignitable fibers which are not likely to be suspended in air in large enough quantities to produce an ignitable mixture.

2.47. Approved Equipment. Electrical equipment listed by the Underwriters' Laboratories (UL) or other recognized testing agency is acceptable only when used under the recommended environmental and operational conditions. Equipment will be approved not only for the class of location, but also for the explosion properties of the specific gas, vapor, or dust that will be present. For additional details see the NEC.

2.47.1. Special Requirements:

2.47.1.1. Electrical equipment and installations in Class I, II, or III hazardous locations involving explosives will comply with the requirements of the code for Division 1 of the appropriate hazardous location class. Equipment and installations in locations which could be used as either a Class I or II hazardous location will meet the requirements of both classes.

2.47.1.2. An alternate source of power must be available for explosives operations where the lack of a continuous power supply may cause a fire or explosion.

2.47.1.3. Low power, solid state devices which are "intrinsically safe" under the NFPA, Standard 493, may be used in any hazardous location.

2.47.1.4. Maintenance. Extraordinary care will be taken in the maintenance of equipment and electrical installations in hazardous locations. The equipment must be periodically inspected and maintained by qualified personnel, with a written record kept of the inspections and maintenance. Where inspection frequency is not prescribed in a technical order (TO), technical manual (TM), or other directive, the inspection period will be fixed by local authority on the basis of the existing situation.

2.47.1.5. Photographic Lighting. Magnesium flashlights or photoflash bulbs are not allowed in hazardous locations. Only lighting equipment bearing the UL listed label for the hazard involved will be used for photography.

2.47.2. Repairs of Electrical Equipment. Repairs and changes will be made only by qualified persons authorized to do such work. Where the equipment may have been exposed to contamination from explosives, the explosives will be removed or neutralized before repairs are started.

2.48. Electrical Service. See paragraph **3.19.** for quantity-distance criteria.

2.48.1. Electrical Service Lines to Explosives Locations (Except Licensed Explosives Locations). Each service line, including shielded cabling, power cabling, communication lines, and conduit, must be run underground from a point at least 50 feet away from the building. The line side of the main disconnecting switch or circuit breaker must have suitable lightning arrestors, usually at the point of the overhead to underground riser service connections.

2.48.1. (PACAF) Communication lines include cable TV lines.

2.48.2. Aboveground electrical transmission lines of all types (running past a facility, but not connected to it) must be separated from combustible explosives facilities and open PESs by at least the distance between the poles which support the lines, unless an effective means is provided to ensure that energized lines on breaking cannot come into contact with the facility. No separation is required for non-combustible facilities.

2.48.3. Entering power, intrusion detection, communication, and instrumentation lines must have surge protection installed as soon as practical, where the conductor enters the facility.

2.48.4. Electrical motors installed in a room or building which is a Class I or II hazardous location will be designed and certified to meet the appropriate hazard class and group. NEC, Article 500 contains the design requirement.

2.48.5. Portable Lighting Systems. UL-listed floodlight systems, mounted on heavy portable stands and placed outside the magazine door or the outdoor working area, may be used where required. Service cords must be placed or protected so that they cannot be walked on or run over by equipment (see paragraph **2.21.7.**).

2.49. Permanent Lighting for Storage Magazines. Lights will be on only when personnel are working in the magazine. Internal fixtures will be standard UL-approved or equal. Explosive proof lighting is required only for the hazardous locations as listed in paragraph **2.46.** See NFPA 70, Article 400 for additional information.

2.49.1. Portable Generators. See paragraph **2.21.7.** for positioning and use of portable support equipment. Place or protect each electrical cord so that it cannot be walked on or run over by equipment.

2.49.2. Flexible Cords. Flexible cords should be type SO hard service cord. Splices are not allowed. All flexible cords, receptacles, and attachment plugs must be equipped with three prongs so that the third prong (green wire) acts as ground. Flexible cords will not be used in place of fixed or installed electrical wiring. Damaged flexible cords will be immediately removed from service.

2.50. Flashlights and Lanterns. Flashlights and hand lanterns powered by low voltage (6 volts or less) dry cell batteries and "miners' cap lamps," approved as "Permissible" by the US Bureau of Mines and by UL for Class I hazardous locations, are considered satisfactory for both Class I and II hazardous locations. In Class III hazardous locations and non-hazardous explosives locations, any type dry cell flashlight is acceptable. Devices which provide "cold light" through chemical action are acceptable for use in any hazardous location.

2.51. Static Electricity. Static electricity is created when charges are allowed to accumulate to the point where an uncontrolled discharge occurs. This discharge can cause a mishap if it occurs through, or in the presence of, a hazardous substance susceptible to electrostatic initiation.

2.51.1. Some hazardous substances are more susceptible to electrostatic initiation than others. Extra caution should be used to minimize the potential of electrostatic discharge during operations involving:

2.51.1. (PACAF) Kevlar vests will be removed prior to entering an environment where exposed explosives are present.

2.51.1.1. Exposed propellants (excluding C-4).

2.51.1.2. Unpacked electrically initiated explosive devices.

2.51.1.3. Hazardous locations (see paragraph **2.46.**).

2.51.2. Personnel can minimize the possibility and severity of a buildup of static electricity by:

2.51.2.1. Avoiding using rags or wearing outer garments made of materials which have high-static generating characteristics (e.g., 100% polyester, nylon, rayon, silk, wool, etc.). Wool socks, glove inserts, and caps as well as undergarments of synthetic fabrics are less of a hazard than outer garments such as jackets or pants.

2.51.2.2. Using rags or wearing outer garments made of cotton or a cotton-synthetic blend. Normally, clothing materials acceptable for flightline use (per TA 016) are acceptable for handling munitions. This includes Gortex which is 100% nylon.

2.51.2.3. Minimizing exposure to conditions which aid the buildup of static electricity such as cold, dry climates or dry, windy climates.

2.51.2.4. Minimizing activities which aid the buildup of static electricity such as physical motion or contact with moving non-conductive substances.

2.51.3. Personnel can minimize the possibility and severity of a discharge of static electricity by:

2.51.3.1. Discharging their static electric potential (or equalizing it to that of the system being handled) prior to touching the system. NOTE: Always avoid directly touching an electrical primer.

2.51.3.2. Minimizing activities which can discharge static such as removing outer garments.

2.52. Static Grounding and Bonding.

2.52.1. Grounding Equipment. The method generally used to eliminate or reduce the hazard from static electricity is to provide an electrically continuous path to ground. A resistance of 25 ohms is common. These grounds should be one continuous ground wire/cable/strap. Short ground wires/cables/straps should not be connected together to make a longer one. Additionally, each ground wire/cable/strap should be connected to the item and/or facility ground individually. Connecting multiple ground wires/cables/straps to another ground wire/cable/strap connecting mechanism (alligator clip, clamp, etc.) should be avoided.

2.52.1.1. When all of the objects are conductive, they can be grounded by electrically connecting all parts to a common ground conductor.

2.52.1.2. When deemed necessary, effective grounding must include the exterior of the facility and the contents of a container. Partial grounding, or using conductors that are too weak or have too much resistance, may increase the static hazard by providing opportunities for discharge through an uncontrolled path to ground.

2.52.1.3. Electrical continuity may be broken by oil on bearings, paint, or rust at any contact point. To get a continuous circuit, grounding straps should be used to bridge such locations. Equipment in contact with conductive floors or table tops is not adequately grounded.

2.52.1.4. Static grounds will not be made to telephone grounds; electrical conduit systems; gas, steam, hot water, or air lines; sprinkler systems; or air terminals of lightning protection systems (connection to the "down wire" of the system at the ground level is authorized). Wire used as a permanent static ground conductor should be large enough to withstand mechanical damage and must not be less than American Wire Gauge (AWG) No. 6 (or No. 8 for existing bonds), or a braided cable of equal resistance. Wires used as static grounds for portable or movable equipment will be large enough to carry the expected current load as specified in the item technical data, but will not be smaller than AWG No. 12 (3/32-inch cable).

2.52.1.5. When making a grounding connection, you should attach the ground wire/cable/strap to the item requiring grounding first, then connect the other end of the ground wire/cable/strap to the approved facility grounding system; this ensures that if a spark occurs, it will occur at the connection to the facility grounding system instead of at the item. When a different or new ground is

needed for the same item, always make the new ground connection first (in the same manner as previously described) before you disconnect the existing ground connection (make-before-break grounding); this ensures that the item will be grounded at all times while transitioning from one ground connection to another.

2.52.2. Belting. If static electricity is a hazard, use non-static-producing belting which has a resistance to ground not exceeding 600,000 ohms. This will include belt-driven compressors, conveyor belts, and so forth.

2.52.3. Conductive Floors and Conductive Shoes. Use standard conductive floors and shoes to provide proper static grounding for personnel at operations where exposed explosives are present (see paragraph **4.18.2.**).

2.52.3.1. Dust-air mixtures of ammonium pirate, Tetris, tetrytol, and dust of solid propellants are also sensitive to static electricity discharge.

2.52.3.2. When conductive floors and shoes are required, table tops on which exposed explosives or dusts are encountered should be covered with a properly grounded conductive material meeting the same requirements as those required throughout an entire building or room. In small areas, conductive mats or runners may be substituted.

2.52.3.3. Personnel, except electricians performing system checks, in places where conductive floors or coverings are required and installed will wear conductive footwear.

2.52.3.4. Where conductive floors and shoes are required, the resistance between the ground and the wearer will not exceed 1,000,000 ohms; that is, the total resistance of conductive shoes on a person, plus the resistance of floor to ground.

2.52.3.5. Conductive shoes and floors need care to ensure retention of their conductive properties. When the shoes are not in use, they should be stored in lockers close to the room where they will be worn, and the change from non-conductive to conductive shoes should be made at that location. Take precautions to prevent the accumulation of even a thin layer of dust or wax which can insulate conductive shoes from the floor. Supervisors will ensure that conductive shoes are not altered so as to negate their safety features and that only conductive material is used in their repair. Shoes must also be cleaned thoroughly before being repaired.

2.52.3.6. Tests of floors will be made when installed to ensure that design specifications are met and at intervals thereafter as prescribed in AFI 32-1065. Test conductive sole shoes before each shift.

2.52.3.7. Test instruments will not be used until all exposed explosives that are subject to possible ignition or initiation have been removed from the hazardous area.

2.52.4. Temporary Static Bonding Cables. Locally fabricated temporary grounding/bonding cables will be checked with a multimeter for continuity prior to being placed into service. The continuity check test points should be from inside clamp jaw to inside clamp jaw. A resistance reading of 10 ohms or less must be obtained. A continuity check should be performed any time a lack of continuity is suspect due to corrosion buildup or damage. Prior to each use, the cable will be inspected for any evidence of corrosion or damage. Documentation of initial and recurring inspections is not required.

2.52.4.1. Clamp. Replace clamp if jaws are deformed, spring is weak, or other defect is noted that would prevent a good connection.

2.52.4.2. Cable. Cable will not be smaller than AWG No. 12 (3/32 inch). Replace cable if more than one third of the cable strands are broken. If electrical continuity is suspect, the cable will be checked and replaced if found to be bad. Deteriorated/damaged plastic coating does not affect electrical capability of cables.

2.52.5. Static Grounding/Bonding Reel Inspection Criteria. All installed static discharge reels shall be given a continuity test at the time of initial installation and at any time a lack of continuity is suspected due to damage or corrosion. The test will be accomplished by extending the entire length of the cable and measuring the continuity between inside the clamp jaw to the frame on which the reel is mounted. A resistance reading of 10 ohms or less must be obtained. Prior to each use, the static discharge reel will be visually inspected for security of mounting and evidence of any corrosion or damage. Documentation of initial and recurring inspections is not required.

2.52.5. (PACAF) Facility installed static grounding reels will be inspected and tested in accordance with T.O. 00-25-172, Chapter 3. Quarterly visual inspection requirements of the basic manual also apply to these reels. Continuity/resistance tests will be accomplished when installed and at intervals not to exceed 24 months. Test results will be documented and controlled at the flight level.

2.53. Installed Systems and Equipment Grounds. Attention must be given to the installation and maintenance of electrical grounding where explosives are involved. All grounding mediums must be bonded together. If the structure is equipped with a lightning protection system, all grounds, including static grounds, must be interconnected as outlined in AFI 32-1065, *Grounding Systems*. Grounding will be tested when installed to ensure that design specifications are met and at intervals thereafter as prescribed in AFI 32-1065. Document all tests and inspections on appropriate forms or automated products. Before making any electrical continuity and resistance tests or electrical repairs, remove all exposed explosives or EEDs that are subject to initiation under the specific circumstances. If there is an operating generator or energized transformer at the location, connect a shunt grounding strap before opening an installed grounding connection for repair or replacement. If the TO or TM does not state the grounding requirements, testing requirements, or the frequency of inspection and testing, use the following guidance:

2.53.1. In a hazardous location (as defined in paragraph **2.46.**):

2.53.1.1. Where the installation permits viewing, make a visual inspection of all static bonds for breaks and corroded connections before starting operations on each day the equipment is to be used. Test any suspected connections and bring them up to required standards before starting operations.

2.53.1.2. Test the static bonding straps on equipment for electrical continuity and resistance as prescribed in AFI 32-1065. Resistance to ground of 10,000 ohms is adequate to bleed off the static charges.

2.53.1.3. Consider equipment (except a belt-driven machine) as a unit in testing of resistance to ground. In measuring the total resistance to ground for belt-driven machinery, do not count the resistance of the belting.

2.53.1.4. Ground all conductive parts of equipment in accordance with NEC (see paragraph **2.53.3.**). Continuity across bonds must be less than 1 ohm.

2.53.2. In a non-hazardous explosives location:

2.53.2.1. Static bonding straps must be inspected visually for breaks and corroded connections quarterly. Suspect connections will be tested for continuity, brought up to required standards, and re-tested before starting operations.

2.53.3. Test resistance to earth and check continuity of the static grounding system according to AFI 32-1065.

2.53.4. Grounding During Electrically Primed Ammunition Operations: Electrically initiated munitions and explosive devices will be grounded when:

2.53.4.1. The responsible engineering function has determined grounding is necessary for specific maintenance or electrical test operations.

2.53.4.2. Performing maintenance on any explosive components which incorporate an electrical initiating system.

2.53.4.3. Assembling to, or disassembling from, an all-up-round (AUR) configuration for a munition which incorporates an electrical initiating system, and when electrical connection or disconnection is being accomplished.

2.53.4.4. The operations which require grounding listed in **2.53.4.1.** to **2.53.4.3.** above are normally included in the specific item technical order.

2.53.5. Electrically initiated munitions and explosive devices need not be grounded when:

2.53.5.1. Cleaning, painting, re-stenciling, or preserving AURs, or replacing components of those AURs which do not incorporate an electrical initiating system.

2.53.5.2. Cleaning, painting, re-stenciling, or preserving explosive components which do not incorporate electrical initiating systems.

2.53.5.3. Replacing components of AURs which incorporate an electrical initiating system when the replacement operation does not require electrical connection or disconnection.

2.53.6. When any electro-explosive device (EED) is unpackaged and handled, personnel must comply with the following procedures.

2.53.6.1. Post signs at entrances and in the room reminding personnel that periodic grounding is required.

2.53.6.2. Where feasible, personnel should wear conductive sole shoes and stand on conductive floors or conductive mats.

2.53.6.3. Conductive materials may be installed on work table surfaces which are then connected to building ground systems to provide a continual ground.

2.53.6.4. If the above is not feasible, one or more grounding bars or other suitable grounding device should be installed at the entrance of, or in, the work bay, room, or building. Require each person to touch that grounding device before handling the ammunition and at frequent intervals while working to discharge any spark potential.

2.53.6.5. Combat aircraft will be grounded when ammunition is being loaded (unless exempt under paragraph **2.57.**). Personnel handling the ammunition will touch the airframe before beginning operations and at frequent intervals thereafter to discharge any spark potential. Ensure the aircraft being loaded is not within the hazard zone of operating radar.

2.53.6.6. When wearing protective clothing, the same grounding requirements apply. Even though the conductivity of the clothing is low, the probability of discharge during handling of explosive components is reduced by grounding.

2.53.7. Personnel must not move ammunition rapidly across any non-conductive surface.

2.53.8. Personnel should test any grounds associated with these operations as specified in AFI 32-1065.

2.54. Lightning Protection. Properly maintained lightning protection is required (with exceptions) for ammunition and explosives facilities (e.g., open pads, revetments, and modules used for manufacturing, processing, handling or storing explosives and ammunition). If lightning protection systems (LPS) other than the types prescribed in the following subparagraphs are used, they must offer equivalent protection. LPSs must comply with National Fire Protection Association (NFPA) 780, *Standards for the Installation of Lightning Protections Systems*, the National Electric Code, NFPA 70, reference (l), and MIL-HDBK-419. All locations where explosives are involved should be equipped with an LPS, and the systems maintained regularly.

2.54.1. Lightning Protection Systems. Lightning protection systems must feature air terminals, low impedance paths to ground, sideflash protection, surge suppression of all conductive penetrations into the protected area, and earth electrode systems. Structural elements of the building may serve as air terminals, down conductors, or the earth electrode. For air terminals to be omitted on earth covered igloos the reinforcing bars or steel arch must be electrically bonded between structural elements and connected to the grounding system. Lightning protection systems used to protect DoD ammunition must be designed to intercept lightning at a 100 ft or less striking distance arc.

2.54.1.1. Air Terminals. An air terminal is a component of a lightning protection system that is intended to safely intercept lightning strikes. Air terminals may include overhead wires or grids, vertical spikes, or a building's grounded structural elements. Air terminals must be capable of safely conducting the current from a lightning strike.

2.54.1.2. Down Conductors. Down conductors (flat or round) provide low impedance paths from the air terminals described above to the earth electrode (ground) system. Structural elements having a high current capacity and a low impedance to ground need not be augmented with wires. Where wires are used as down conductors, they must meet the requirements of the NFPA 780.

2.54.1.3. Side Flash Protection. Protection from side flash caused by lightning shall be obtained by either separation distance or bonding in accordance with NFPA 780, except as modified by subsequent subparagraphs. The reinforcing bars in adjacent structural elements must be joined in a manner to provide electrical bonding between the elements. This is an absolute requirement for facilities that are used to store ammunition. Techniques commonly used and approved in the construction industry to join reinforcing steel are acceptable for this purpose. The steel arch of an earth-covered magazine must be similarly bonded to the floor.

2.54.1.3.1. Side Flash Protection for Nuclear Weapons. In the following sentences, the term "intrusive maintenance" means maintenance that includes operations performed inside the weapon's sealed case. When conducting intrusive maintenance operations inside a HAS, maintain a 7-foot minimum distance between an LPS unmodified Weapons Maintenance Truck (WMT) and the ceiling, walls, and metallic conductors (such as a tool box or metal cabinet) inside the HAS. If no WMT is being used, maintain that same 7 feet distance from the

weapon itself and the HAS's ceiling, walls, and metallic objects. When using an LPS unmodified WMT, include the stairs and attached support equipment while measuring the 7-foot distance. When using an LPS modified WMT, no minimum distance is required provided all additional safety requirements are adhered to in accordance with TO 11N-20-7.

2.54.1.3.1.1. For intrusive maintenance operations being performed at locations other than in a HAS/WMT, maintain a 7 foot minimum distance from the weapon itself and the facility exterior walls, ceiling, and metallic objects.

2.54.1.3.1.2. If any metallic conductor is within 7 feet of a facility's wall or ceiling, the buffer between the weapon and the wall or ceiling must be at least 7 feet plus the width of the metallic conductor(s). For example, a weapon may not be placed closer than 10 feet from a wall having a 3-foot wide toolbox against it.

2.54.1.3.2. Any new exceptions to the 7-foot minimum would have to be based on technical evaluation. These evaluations must show that weapon electrical lightning isolation design can provide appropriate electrical energy isolation; such evaluations must include specific maintenance procedures. All such evaluations must be approved by HQ AFSC/SEW prior to use.

2.54.1.4. Surge Protection for Incoming Conductors. An LPS shall include protection for all incoming conductors. The surge protection must include suppression at the entrance to the building from each wire to ground. Shielded cable, power cabling, communication lines, and electrical conduit shall be buried underground in conduit for a minimum of 50 feet prior to entering the structure. All other metallic utility lines and pipes must be electrically connected to the lightning protection system or the structural steel of the building just before they enter the building.

2.54.1.5. Earth Electrode System. Earth electrode systems dissipate the current from a lightning strike to ground. Earth electrode systems may be Ufer grounds, ground loop conductors, radials, grounding rods, ground plates, a cable immersed in nearby salt water, chemical grounds that are installed for the purpose of providing electrical contact with the earth, or combinations of these.

2.54.1.6. Visual Inspection. The lightning protection system shall be inspected as prescribed in AFI 32-1065.

2.54.1.7. For specific guidance on the subjects of electrical tests, bonding (resistance) tests, resistance to earth tests, record keeping, and personnel training, see AFI 32-1065.

2.54.1.8. Lightning Protection Exceptions. Properly maintained lightning protection is required for ammunition and explosives facilities, with the following exceptions provided that the responsible commander accepts the loss of resources and structure at the location without LPS or inadequate LPS and any potential collateral damage to other nearby exposures (except for sub-paragraphs **2.54.1.8.3.**, **2.54.1.8.4.**, and **2.54.1.8.8.**). The commander's risk acceptance must be documented by letter (i.e., signed by the commander stating he/she understands and accepts the potential loss of resources and structures at the location without LPS and any potential collateral damage to other nearby exposures) and this letter must be submitted as part of the explosives site plan request package.

2.54.1.8.1. Explosive operations served by a local lightning warning system to permit operations to be terminated before the incidence of an electrical storm if all personnel can and will be provided protection equivalent to public traffic route distance. An approved operating instruction (OI) governing withdrawal of personnel from the area is required.

2.54.1.8.2. Facilities where personnel are not expected to sustain injury and, at the same time, the resulting economic loss of the structure, its contents or surrounding facilities is minimal.

2.54.1.8.3. Air terminal systems are not required on HASs or on metal aircraft shelters.

2.54.1.8.4. Lightning protection systems may be omitted on flightline PESs if the system interferes with flightline criteria.

2.54.1.8.5. Facilities used for temporary (non-recurring) storage of munitions.

2.54.1.8.6. Structures, facilities, or mobile equipment housing explosives or explosives operations not regularly situated at a fixed location.

2.54.1.8.7. Structures and facilities limited to the storage or handling of small arms ammunition where the value of the ammunition is $10,000 or less.

2.54.1.8.8. Licensed explosives locations outside the explosives storage area but situated in buildings primarily used for other purposes and that have relatively small quantities of explosives. ***NOTE:*** This exemption from additional or special lightning protection is made because of the explosives. Other contents of the building may require protection.

2.55. Electrical Testing of Explosives Items, Components, and Weapon Systems. Follow instructions in specific weapon or weapons system technical orders for testing individual explosive items or weapon systems. Where there is doubt about the safety or adequacy of any test procedure or instrumentation, submit a request to the responsible technical agency (prime AFMC element) for advice or assistance. Consider the following guidance:

2.55.1. Electrical or electronic test equipment should normally use the weakest possible power source. If feasible, use battery-powered equipment instead of a 110-volt source. In any event, the test power source should be incapable of initiating the explosive item being tested. Where greater power must be used, provide positive safeguards to prevent delivery of enough power to initiate the item.

2.55.2. Test equipment should not be placed in hazardous locations unless necessary, and then it must be suitable for operations in a hazardous location (see paragraph **2.46.**).

2.55.2.1. Special attention should be given to the ventilation requirements of equipment containing vacuum tubes and the possibility of malfunction of equipment using resistors and other devices for limiting testing power.

2.55.2.2. Unless the test equipment is incapable of initiating the item being tested, operational shields should be provided where needed to protect personnel from injury.

2.55.2.3. The explosive item, test equipment, and leads should be protected from exposure to electromagnetic (induction and radiation fields) and electrostatic energy of more than an order of magnitude less than that required to initiate an explosion.

2.56. Procedures in Event of Electrical Storms.

2.56.1. The following guidelines apply when an electrical storm is in the vicinity. An electrical storm is considered “in the vicinity” if personal observation or official weather reports locate lightning flashes within 5 nautical miles (5.75 miles) of the installation. For nuclear intrusive maintenance operations conducted inside a HAS, using an LPS unmodified WMT, isolate the WMT from the HAS by disconnecting electrical and communication lines. When an electrical storm is in the vicinity, person-

nel can no longer remain inside the PTR Q-D arc emanating from an unprotected explosives loaded truck holding pad, an unprotected open explosives storage pad, or an unprotected PES that is a facility. These types of locations (facilities or areas) are considered unprotected if they have no lightning protection installed.

2.56.1.1. All explosives operations will stop that are outdoors or at an indoor location that has no LPS protection. The continuation of explosives operations within an LPS protected facility is not prohibited. When continuing operations in LPS equipped facilities, assess the need and urgency for doing so. There are no guarantees that LPS protection will provide the same degree of safety as a lightning-free environment.

2.56.1.2. Whenever possible, ask the local weather unit to make an accurate assessment and to arrange for weather warnings when existing or scheduled operations might create an exceptional hazard.

2.56.1.3. Responsible persons should be empowered to order evacuation when considered necessary. Personnel will be evacuated from these locations:

2.56.1.3.1. Explosives locations (other than those licensed under paragraph **2.35.**), operating buildings, open storage sites or loading docks without approved lightning protection systems, which contain explosives.

2.56.1.3.2. Facilities containing exposed explosives, explosive dust or explosive vapor, or unpackaged electrically initiated explosive devices, even though equipped with approved lightning protection systems.

2.56.1.3.3. Parked, explosives-laden vehicles and railroad cars, not protected by an approved lightning protection system.

2.56.1.3.4. All locations within public traffic route (PTR) of facilities and carriers listed above.

2.56.2. Aircraft explosives loading, unloading, or pre-load operations will be stopped at the same time that fueling and defueling operations are suspended (AFOSH Standard 91-100). Also, see paragraph **2.56.1.1.** above. This manual does not require the full evacuation of all flightline personnel, under these conditions. The operations and logistics group commanders and weather officer will develop and set up warning procedures so that timely precautionary measures may be taken.

2.57. Grounding Aircraft for Explosives Loading and Unloading Operations. Aircraft will be grounded during explosives operations. See TO 00-25-172 for grounding procedures. ***EXCEPTIONS*:**

2.57.1. If there are unusual parking problems in operating from "bare" and "limited" bases, nonmilitary airfields, host nation airfields, etc., the exceptions in paragraph **2.57.2.2.** apply. This exception does not relieve commands from responsibility of providing proper grounding in locations where operations continue or where parking facilities are required on a recurring basis.

2.57.2. If static grounding facilities are not available at a suitable parking location, commands should use the best alternate method of reducing the hazard in the following order of precedence:

2.57.2.1. Commands should accomplish static grounding to 10,000 ohms (or the lowest resistance possible) by using ground rods.

2.57.2.2. If feasible, the aircraft and the vehicle or handling equipment used in loading and unloading will be connected (bonded) together with an approved static ground capable of equalizing the electrical potential between the two. For example, although it is considered feasible to bond a cargo vehicle to the aircraft, it may not be feasible to bond an aircraft to a forklift if the lift must move during the loading operation.

2.57.2.3. Personnel will be particularly careful to discharge themselves or to equalize their static electrical potential to that of the aircraft, vehicle, handling equipment, etc., while loading and unloading explosives.

2.57.2.4. Cargo aircraft do not require grounding during engine running on/off (ERO) operations.

2.58. Hazards of Electromagnetic Radiation to Electro-Explosive Devices (EED).

2.58.1. General Information. Use the criteria in this paragraph unless a specific and valid exception has been authorized for a given hazard.

2.58.1.1. If an electromagnetic hazard to EEDs cannot be solved by technically qualified personnel at the local level, obtain consultation and measurement survey assistance as shown in **2.58.10.** below.

2.58.1.2. If an exception to the guidance given in this manual has been authorized, take the following action as appropriate:

2.58.1.2.1. When the findings apply to a given weapon system, equipment, or explosive item, the applicable weapons system or other TO must be changed to include the criteria. The agency requesting assistance will notify the command and activity responsible for the TO of the required changes, with information copies to all concerned parties.

2.58.1.2.2. When circumstances make it appropriate, details of the situation and the authority and basis of the approved criteria will appear in permanent base or unit publications.

2.58.2. Electromagnetic Radiation Hazards**:**

2.58.2.1. EEDs are typically designed to be initiated by low levels of electrical energy. As such, they are susceptible to unintentional ignition by many forms of direct or induced electrical energy such as from lightning discharges, static electricity, or turbo-electric (friction-generated) effects. Another aspect of this hazard is the accidental initiation of EEDs by radio frequency (RF) energy due to ground and airborne emitters.

2.58.2.2. Electromagnetic energy can be either conducted or radiated. Conducted electromagnetic energy is imposed on circuits from other subsystems or sources by various methods. Examples are inductive or capacitive coupling from other cabling, sneak ground circuits, defective components or wiring, or errors in design.

2.58.2.3. Hazards from static electricity to EEDs in explosive items occur mainly in ground operations. Some airborne incidents attributed to static electricity probably were due to induced effects from lightning strikes or to stray energy from onboard equipment.

2.58.3. The requirements in this section are designed to preclude inadvertent EED initiation from radiated electromagnetic energy. Susceptibility to electromagnetic radiation (EMR) is dependent on a number of variables. Among these are the no-fire sensitivity level of the EED; the configuration of the leads, circuit, or installation; and the frequency and power density of the EMR environment.

2.58.4. The primary means for insuring EMR does not cause inadvertent EED initiation is by limiting the power density to levels below the no-fire sensitivity threshold of the EEDs. This is done by maintaining a safe separation distance between the emitter and the EED(s). This distance is a factor of the effective radiated power (ERP) and frequency of the emitter. ERP is a product of the transmitter power and the gain of the transmitting antenna. Antenna gain is a measure of the power channeled by a directional antenna. It is usually provided in decibels (dB). Sometimes it is provided as a unitless number, G_t. Use the following formula to convert between G(dB) and G_t:

$G_t = \log^{-1}[G(dB)/10] = 10^{[G(dB)/10]}$

Frequency is measured in hertz (Hz) or cycles per second. Use the following formulas to convert between kHz (1000 Hz), MHz (1,000,000 Hz), and GHz (1,000,000,000 Hz):

1 kHz = .001 MHz

1 GHz = 1000 MHz

Transmitter power, P_t, is expressed in watts (W). If a transmitter is pulsed, it will have both a peak and average P_t. Generally, peak P_t is the best number to use when determining ERP. However, pulsed systems with small pulse widths (less than 1 millisecond) may be more accurately represented by average power (see note 3 to **Table 2.5.**).

2.58.5. **Table 2.5.** should be used as a guide in setting up safe separation distances between EEDs and the transmitting antenna of all RF emitters or determining the maximum power density allowable for an EED. These calculations are based on "worst-case" assumptions, such as EEDs with a maximum no-fire sensitivity of 50 mW and far-field conditions. The far field of the antenna provides a more consistent power density environment than that found in the near field. The following formula can be used to determine where the far field begins:

$R_{ff} = 2D^2f/c$ where

R_{ff} = distance, in meters, from transmitting antenna where the far field begins

D = largest dimension of the antenna, meters

F = frequency (Hz)

c = speed of light, 3×10^8 m/s

For near field conditions, see TO 31Z-10-4, Chapter 4, Section 2.

2.58.6. Safe Separation Distance Criteria.

2.58.6.1. Column A, Worst Case or Unknown Configuration. When EEDs are unshielded, or the leads or circuitry could inadvertently be formed into a resonant dipole or loop antenna, or the configuration of the EEDs is unknown.

2.58.6.2. Column B, Exposed EEDs. When EEDs are exposed due to maintenance, assembly, or disassembly or the item or munition which contains the EED is exposed due to maintenance, assembly, or disassembly.

2.58.6.3. Column C, EEDs in Storage or Ground Transport in a Metallic Container. When EEDs are stored or in a ground transport configuration inside a conductive (metallic) container. This

includes EEDs assembled in a weaponized configuration when the weapon case provides a conductive shield.

2.58.6.4. Column D, EEDs in Storage or Ground Transport in a Non-Metallic Container. When EEDs are stored or in a ground transport configuration inside a non-conductive (non-metallic) container such as wood or plastic.

2.58.6.5. Column E, EEDs In or On Aircraft. When EEDs or the item or munition containing them are in a transport configuration inside cargo aircraft or externally loaded on an aircraft.

2.58.6.6. Column F, Leadless EEDs. When EEDs do not have lead wires and are in the original shipping configurations and/or containers. This does not include handling and/or installing leadless EEDs (column B applies).

2.58.6.6.1. When handling and installing EEDs, apply the distance listed in **Figure 2.3.** or **Table 2.5.**, column B, even though leadless EEDs are involved, since weapon systems wiring could form a resonant antenna during installation.

2.58.6.6.2. Every person who handles these devices must be careful not to touch any electrical contact to the metal surfaces of aircraft and missile skin and/or structure, and must take precautions against building up or discharging static electricity through such contacts.

2.58.6.7. When unclear about the appropriate configuration and column to apply from **Table 2.5.**, use the most conservative, i.e., the greatest distance or largest power density.

2.58.7. Maximum Power Density Criteria.

2.58.7.1. When electrical characteristics of the EEDs are not known or when the minimum safe separation distances cannot be complied with because of lack of real estate or other limitations, a power density and field intensity survey should be made. Compare the measured power density with the recommended maximum power density calculated from **Table 2.5.** The measured power density must be no greater than the maximum power density.

2.58.7.2. When more than one transmitter is operating in an area, each at a different frequency, the maximum allowable power density is the greatest power density calculated for each of the transmitters.

2.58.8. Approximate calculations for safe separation distances can also be made using the nomograph provided in **Figure 2.3.** Example 1 in paragraph **2.58.10.** illustrates how to apply this nomograph.

2.58.9. Assistance Requests**.** When a hazardous situation is suspected or the minimum safe separation distances for a particular location are in question, request assistance from higher-headquarters explosives safety personnel. Submit major command requests for assistance to HQ AFSC/SEW when conventional explosive devices are involved and HQ AFSC/SEW and AAC/WN when nuclear weapons are involved. HQ AFSC determines technical support requirements from AFMC agencies who reply directly to HQ AFSC. HQ AFSC sends decisions to the originating base or command, with information copies to all agencies involved in the decision process. Send information copies of all requests to HQ AFMC/SEW/DRW and applicable air logistics centers, 38th EIW, and ASC/ENACE. Include all information needed for a complete understanding of the situation. Minimum requirements are:

2.58.9.1. Operating frequencies, pulse widths, pulse repetition frequencies, peak power and average power of each transmitter.

2.58.9.2. Gain characteristics (main and sidelobe), focal length, largest dimension, scan characteristics (rates, dwell times, angles, etc.), and height above the ground for each antenna.

2.58.9.3. Type aircraft, ordnance, and applicable EED involved, along with available characteristics of EED (no-fire power or energy levels).

2.58.9.4. Base layout and contour map of the area. Show transportation routes of EED and ordnance subsystems, location of ordnance and EED maintenance, storage, and assembly and disassembly areas and location of all transmitting antennas.

2.58.10. Examples of Safe Separation and Power Density Calculations:

Example 1. Use **Figure 2.3.** or the proper formula in **Table 2.5.** to find the recommended safe separation distance for the following conditions:

Condition of EED: Exposed.

Transmitter frequency = 300 MHz.

Average transmitter power = 1000 watts.

Antenna gain = 15dB.

When using the nomograph:

Step 1. Mark the point where 300 MHz lies on the frequency scale.

Step 2. Determine the effective radiated power (ERP) by multiplying P_tG_t where

P_t = 1000 watts (given)

$G_t = \log^{-1}(GdB/10) = \log^{-1}(15/10) = \log^{-1} 1.5$ (or $G_t = 31.6$):

$P_tG_t = (1000)(31.6) = 31{,}600$ watts.

Mark this spot on the effective radiated power scale.

Step 3. Draw a straight line through the points established in steps 1 and 2 to the distance scale. The recommended safe separation distance, about 250 feet, is read where the line intersects the distance scale.

When using the formula:

Step 1. Find the proper column and formula from **Table 2.5.** Since the EED is exposed and the frequency is 300 MHz, the applicable formula is: $D = \frac{450}{f} \times \sqrt{P_tG_t}$

Step 2. Determine P_tG_t where

P_t = 1000 watts (given),

GdB = 15

$G_t = \log^{-1}(GdB/10) = 31.6$:

$P_tG_t = (1000)(31.6) = 31{,}600$ watts

Step 3. Substitute these values into the formula: $D = \frac{450}{300} \times \sqrt{31600} = 267$ feet

Example 2: Is EED exposure within the maximum allowable power density, given the following conditions?

Actual measured power density = 450 W/m^2.

Condition of EED: In nonmetallic containers. Frequency: 200 MHz.

Step 1. Find the proper column and formula in **Table 2.5.** Since the frequency is 200 MHz, the proper formula to determine maximum safe power density is: $P_o = 4.256 \times 10^{-5} \times f^2$

Step 2. Solve the equation: $P_o = 4.256 \times 10^{-5} \times (200)^2$ which yields $P_o = 1.7$ W/m^2

Therefore, EED are being exposed to 450 W/m^2, which is more than the computed maximum safe power density.

Table 2.5. Recommended EED Safe Separation Distances and Power Densities.

Column	A	B		C	D		E	F
Configuration of EED	**Worst Case or Unknown**	**Exposed EED**		**EED in Storage or Transport**			**EED in Or On Aircraft**	**Leadless EED**
				(Metal Container)	**(Non-metal Container)**			
		Frequency	**Formula**		**Frequency**	**Formula**		
Recommended Separation Distance (or Formula for Distance)	Use **Figure 2.3.** or Column B	Up to 20khz	$D = .093 \times \sqrt{P_t G_t}$	$D = .093 \times \sqrt{P_t G_t}$	Up to 63kHz	$D = .093 \times \sqrt{P_t G_t}$	$D = .093 \times \sqrt{P_t G_t}$	D=10 feet
		20kHz to 2MHz	$D = 4.63 f \times \sqrt{P_t G_t}$		63kHz to 2MHz	$D = 1.46 f \times \sqrt{P_t G_t}$		
		2MHz to 48.5 MHz	$D = 9.26 \times \sqrt{P_t G_t}$		2 MHz to 48.5 MHz	$D = 2.93 \times \sqrt{P_t G_t}$		
		48.5 MHz to 4.85GHz	$D = \frac{450}{f} \times \sqrt{P_t G_t}$		48.5 MHz to 1.53 GHz	$D = \frac{142}{f} \times \sqrt{P_t G_t}$		
		4.85GHz to 45GHz	$D = .093 \times \sqrt{P_t G_t}$		1.53 GHz to 45 GHz	$D = .093 \times \sqrt{P_t G_t}$		
Recommended Maximum Power Density	$P_o = \frac{0.01W}{m^2}$	Up to 20kHz	$P_o = \frac{100W}{m^2}$	$P_o = \frac{100W}{m^2}$	Up to 63kHz	$P_o = \frac{100W}{m^2}$	$P_o = \frac{100W}{m^2}$	Not Applicable
		20kHz to 2 MHz	$P_o = \frac{.04}{f^2}$		63kHz to 2 MHz	$P_o = \frac{.4}{f^2}$		
		2MHz to 48.5 MHz	$P_o = \frac{0.01W}{m^2}$		2MHz to 48.5MHz	$P_o = \frac{0.1W}{m^2}$		
		48.5 MHz to 4.85 GHz	$P_o = 4.256 \times 10^{-6} \times f^2$		48.5MHz to 1.53GHz	$P_o = 4.256 \times 10^{-5} \times f^2$		
		4.85GHz to 45GHz	$P_o = \frac{100W}{m^2}$		1.53GHz to 45GHz	$P_o = \frac{100W}{m^2}$		

NOTES:

1. In the formulas above:
   D = distance (ft)
   f = frequency (MHz)
   P_t = transmitter power (W)
   G_t = antenna gain. To convert from G (dB), use $G_t = \log^{-1}[G(dB)/10]$
   P_o = maximum power density (W/m^2)
2. Use peak power for P_t except for pulsed systems with pulse widths less than one millisecond (ms). In this case, use the larger of 1) the average power or 2) (peak power) x (largest pulse width expressed in ms)/1 ms. Note: 1 ms = .001 seconds.
3. For EEDs with a no-fire sensitivity less than 50 mW, request assistance in accordance with paragraph **2.58.10.**
4. For frequencies outside the ranges specified in **Table 2.5.**, request assistance in accordance with paragraph **2.58.10.**
5. Formulas in **Table 2.5.** apply to the far field of the antenna only. For near field requirements, see TO 31Z-10-4, Chapter 4, Section 2. Far field is determined by
   $R_{ff} = 2D^2f/c$
   R_{ff} = far field range in meters
   D = largest dimension of the antenna in meters
   f = frequency in Hz
   c = speed of light, $3x10^8$ m/s
6. For frequencies outside the range of **Table 2.5.**, follow the procedures in paragraph **2.58.10.**
7. Formulas apply to the far field of the antenna only. For antennas with long focal lengths, see TO 31Z-10-4, chapter 4, section 2, for near field formulas.

Figure 2.3. Recommended Safe Separation Distances for EEDs in Exposed Condition

.

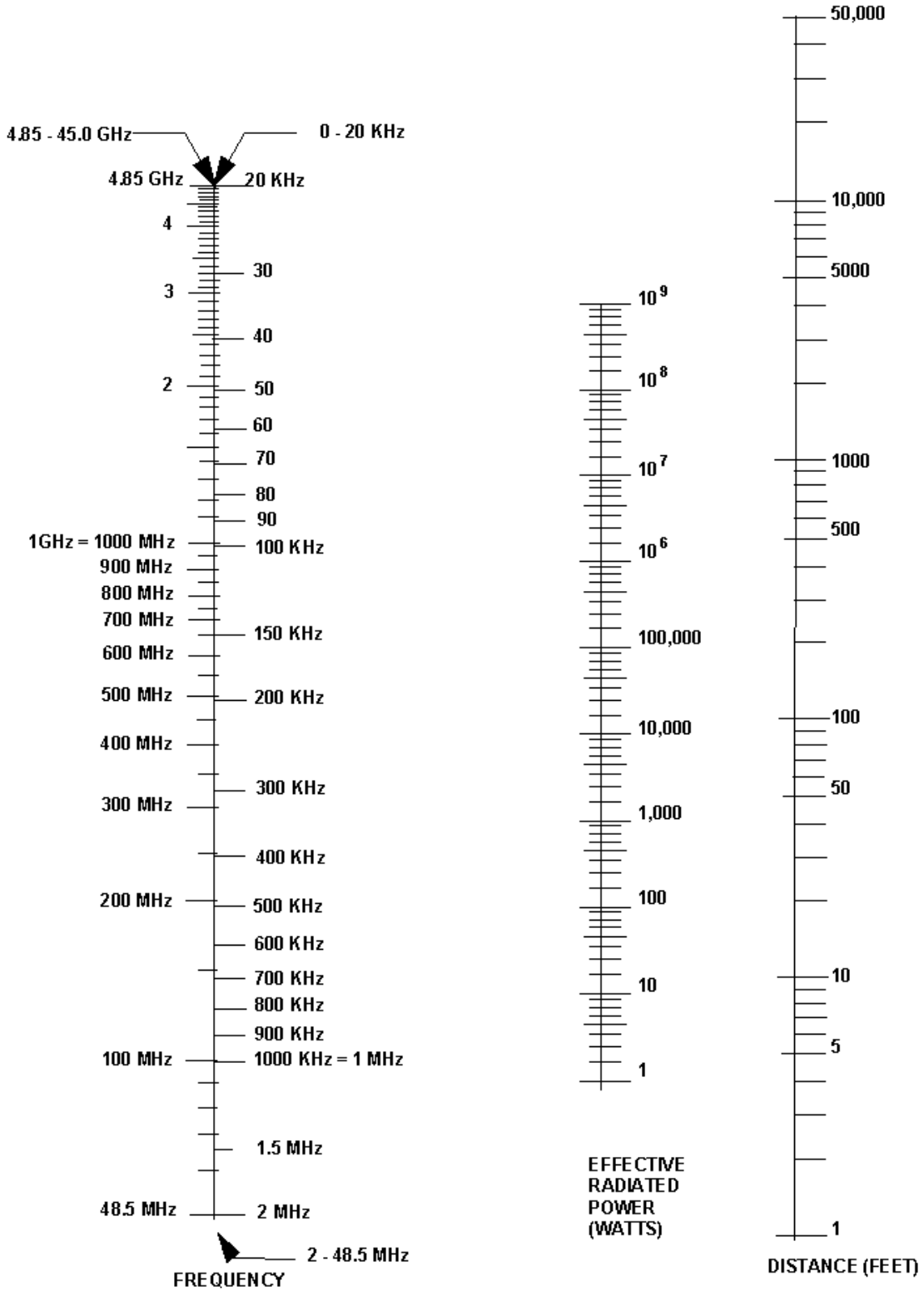

Section 2E—Transportation

2.59. Guidance. This section gives safety requirements for transporting explosives and for operating vehicles and materials handling equipment in explosives locations. In-use ammunition items that must accompany security forces or other defense forces are not governed by transportation rules. Because of varying circumstances, authorization to carrying in use (except HC/D 1.1) ammunition into base facilities will be determined by MAJCOM and incorporated into the MAJCOM supplement to this manual. HC/D 1.1 explosives will not be taken into public assembly places except when required by essential mission needs or immediate security. Quantity-distance (Q-D) criteria does not apply to munitions and explosives in the transportation mode. Take precautions to ensure minimum exposure of people and property during all phases of transportation. The time munitions and explosives are in the transportation mode must be limited to the absolute minimum necessary to complete the task.

2.59. (PACAF) Security forces vehicles transporting armed personnel and their basic load munitions on-post, and to and from post do not require Department of Transportation (DOT) placards. Check host nation laws for off-base placarding requirements. In addition to the basic load ammunition carried on their person (in pouches rucksacks, containers, etc.) security forces personnel may have basic load munitions in the vehicle cab or bed provided they are in closed immobilized metal containers. Ensure container mounting surfaces or areas where containers are tied down do not pose a heat or spark threat to munitions items.

2.60. Federal Regulation. Title 49, Code of Federal Regulation (CFR) regulates commercial shipment of hazardous material, including explosives, by rail, motor vehicle, cargo aircraft and ship within the United States (except maritime explosives). Rules in Title 49-CFR only apply on military installations when specifically prescribed. For transporting explosives and munitions on an Air Force installation use the criteria is this manual. For transporting military explosives and munitions not on an Air Force installation, but in an Air Force conveyance, operated by Air Force personnel, the rules in Title 49 CFR must be applied to the extent they are prescribed in USAF/DoD directives. See paragraph **2.61.** for examples, but not an exhaustive list, of such publications.

2.61. Basic Directives. In addition to this manual, the following directives apply to military shipments of hazardous materials within the defense transportation system: AFJI 11-204, *Operational Procedures for Aircraft Carrying Hazardous Material;* AFJMAN 24-204, *Preparing Hazardous Materials for Military Air Shipment*; TO 11N-45-51 series, *Transportation of Nuclear Weapons, Materiel, General Shipping, and Limited Life Components (LLC) Data; Defense Transportation Regulation* (DTR) 4500.9R *Part 2* and AFJI 24-210*, Packaging of Hazardous Material.*

2.62. Local Laws Regulating Transportation of Explosives and Dangerous Articles. Each state and nearly all local and foreign governments have laws or ordinances regulating transportation of explosives and other dangerous articles within their jurisdiction. Obey local laws where state and local governments have jurisdiction. ***NOTE:*** Where there is exclusive federal jurisdiction, local laws may not apply. Where there is a conflict, contact your MAJCOM for clarification.

2.63. Hazard Classification Requirements. Explosives, to be acceptable for transportation by any mode, must have an assigned hazard classification (Q-D hazard class/division; storage compatibility group; DOT class, markings, shipping name and label; and United Nations serial number). Developmental items, test articles, components, and certain commercial items that contain explosives, but without a final classification must be assigned an interim hazard classification. Procedures and authority for assign-

ing classifications are in TO 11A-1-47. Final and interim hazard classifications assigned by the Army and Navy authorities are acceptable to the Air Force.

2.63.1. Commercial explosive items purchased for official use must have a hazard classification assigned in accordance with TO 11A-1-47 before transportation and use, except as provided in paragraph **2.63.2.** below. See paragraph **2.8.** for exempting fireworks.

2.63.2. Store, transport, or offer for transportation, commercial explosives that have not been examined, hazard classified, and approved by DoD in accordance with 49 CFR 173.56(b)(2), provided:

2.63.2.1. The explosive has been designated, in writing, by the Associate Administrator for Hazardous Materials Safety (AAHMS), Research and Special Programs Administration, U.S. DOT, as "Not Regulated"; or

2.63.2.2. The explosive has been approved for transportation, in writing, by the AAHMS in a Classification of Explosives, Competent Authority Approval, or in a Confirmation of Acceptability of a foreign Competent Authority Approval, and the hazard classification of the explosive is 1.4S.

2.63.3. Temporary Storage. 49-CFR or AFJMAN 24-204 criteria may be used for temporary mixing of explosives while undergoing packing and unpacking operations or while in temporary storage awaiting shipment. Shipping, receiving and storage facilities must comply with DoD Q-D criteria for the hazard class/division involved.

2.64. Compatibility of Explosives During Transportation. Part 177, Subpart C, Title 49, CFR provides guidance for separating and segregating hazardous materials, including different explosives, in the various modes of commercial transportation. Explosives transported on a public highway by Air Force motor vehicles, operated by Air Force personnel, will be separated and segregated using the rules in Title 49, CFR, except as otherwise provided in this manual or other applicable military directives. When an item containing explosives is assigned to other than hazard class 1 because of the predominant hazard, a compatibility group is still assigned. See paragraph **3.4.** For these items compatibility for transportation, and temporary storage incident to transportation, must be based on rules for the assigned hazard class, not on the compatibility group. The compatibility group for these items applies only to long term storage. Cargo-configured items that may be shipped in the same Air Force aircraft are listed in AFJMAN 24-204 and TO 11N-45-51 series (see paragraph **2.61.**).

Procedures for submitting a compatibility waiver for air transportation of explosives is contained in AFJMAN 24-204. ***NOTE:*** The following exceptions to the above standards are permitted:

2.64.1. Development of new items for transportation by combining previously hazard classified components into an increased state of assembly to meet a valid military need. Use normal hazard classification procedures (TO 11A-1-47) to obtain the hazard classification and approval for transportation applicable to the new configuration.

2.64.2. Movement of assembled or partially assembled explosive items between servicing explosives locations and aircraft loading points or other such locations on the same military installation, when the assembly has not been classed and approved as provided in TO 11A-1-47, but is necessary to meet valid operational requirements. If the operational requirement is expected to continue or can be anticipated, seek hazard classification and approval.

2.64.3. Movement in a military vehicle of minimum quantities of explosive items necessary for demolition operations, to include proficiency training. Blasting caps, demolition explosives and unserviceable (but not dangerously unserviceable) munitions may be transported by the same vehicle, provided MAJCOM approves the mixing of all applicable compatibility groups. See paragraph **2.70.** and **2.70.1.** for restrictions concerning the carrying of explosives inside passenger compartments.

2.64.3. (PACAF) EOD is authorized to transport minimum quantities of explosives necessary for demolition operations and proficiency training in a single military vehicle. At no time will munitions items be transported in the personnel compartment of a vehicle. All demolition explosives and munitions will be serviceable. Mixing of applicable compatibility groups is authorized. Blasting caps and explosives/demolition materials will be separated to the maximum extent possible at all times.

2.64.4. Transport dangerously unserviceable munitions in a separate military vehicle. If transport in a separate military vehicle is not possible, segregate and sandbag from other explosives being transported. Transport dangerously unserviceable munitions only on base and when the munition has been determined safe for transportation by qualified personnel as specified by the MAJCOM.

2.64.5. Movement by a DoD-owned vehicle, operated by DoD personnel, of mixed loads consisting of components (not otherwise compatible for transportation), in the numbers and of the types necessary to assemble a number of complete rounds of a single type, when essential to meet operational requirements, and when separate (unmixed) movement is not feasible. See AFJI 24-211 Vol 1, *Defense Traffic Management Instruction,* for procedures where such exceptions to compatibility rules are required.

2.64.6. Movement by a DoD-owned vehicle, operated by DoD personnel, or a mixed load of small quantities of items (not to exceed 1,000 pounds total NEW) from compatibility groups B through J, N, and S. The NEW of 1,4S items need not be included.

2.64.7. Movement by Security Forces of mixed loads of ammunition in performance of their duties.

2.65. Packaging. Packaging of explosives offered for shipment must comply with Title 49, CFR, Part 173, or AFJMAN 24-204 specifications, as appropriate. Follow these instructions:

2.65.1. Locally made packaging must meet the construction and marking requirements in Title 49, CFR, or must conform with a military Certification of Equivalency for the item being packed.

2.65.2. Mark each package to identify contents. The DOT marking consist of the Proper Shipping Name; United Nations Identification Number; and the EX-number, national stock number or other product code as specified in the hazard classification. See TO 11A-1-46, AFJMAN 24-204, TO 11N-45-51, or the Joint Hazard Classification System listing, as appropriate.

2.65.3. If an item is not listed in above references, contact OO-ALC/LIW Hill AFB UT 84056-5609 for the required data.

2.65.4. Do not open or repair a package in a railcar, motor vehicle, or aircraft unless it is essential for inflight safety or to safely unload a damaged package. Avoid re-nailing boxes because of the potential to strike the explosives with the nail.

2.65.5. If a package is damaged or defective, remove it from the transporting vehicle at the earliest opportunity for repair.

2.66. Shipment of Explosives Which Have Been Damaged or Failed To Function. If it is necessary to ship an explosive item that has been damaged, subjected to abnormal force or has failed to function, ask the responsible AFMC (prime ALC) element for shipping, packing, marking and safety instructions.

2.67. Guides for Controlling Incoming Explosives Shipments. Review guidance in the Transportation Facilities Guide maintained by Military Traffic Management Command (MTMC). Contact the base transportation officer for this guide. The base transportation officer is responsible for maintaining the base information current in the MTMC database. Clearly state in notification procedures the NEWQD (and MCE if applicable), by hazard class/division, that can be received at unloading facilities (i.e., railheads, ports, hot cargo pads, etc).

2.68. Explosives Movement Routes on Base. Designate the safest possible primary and alternate explosives movement routes to cover all phases of movement. Identify routes and any limitations on explosives quantities by hazard class/division in base publications. Avoid built-up areas and key, mission-oriented facilities and equipment to the maximum extent possible. ***EXCEPTION.*** *Movements of munitions within a munitions storage area, or to and from licensed storage locations; and transportation of explosives in support of the training of working dogs are not restricted to designated routes.*

2.68. (PACAF) The installation weapons safety office will approve explosive movement routes. Movement of MWD explosives training aids need not conform to primary and alternate explosive routes; however, deviations from explosive routes will be addressed in locally written operating instructions.

2.68.1. (Added-PACAF) Transportation of EOD explosives used for exercises are not restricted to designated routes. Explosive placarding of the vehicle is required. EOD personnel must avoid populated areas as much as possible in accordance with paragraph **2.59.**

2.69. Safe Haven. When the Military Traffic Management Command requests Safe Haven for a shipment of explosives, the responsible commander may authorize explosives laden carriers to temporarily store their cargo. This storage area should be as remote as practical from populated areas and POL sites. The authorization is not to exceed the duration of the emergency. See AFI 32-4001 for information.

2.70. Vehicle and Materials Handling Equipment General Safety Requirements. Do not transport explosives in a passenger compartment of a vehicle. When units responsible for demolition are issued vehicles without separate cargo compartments, trailers will be used to the maximum extent possible. ***EXCEPTIONS:*** *Minimum essential personnel and limited quantities of HC/D 1.4, 1.3, and 1.2.2 (or (04) 1.2) explosives, as approved by a local OI, may be transported together in cargo portion of vehicles (including "Metro" types used on flightlines) or in vehicles used as runway supervisory unit (RSU).*

2.70. (Added-PACAF) EOD vehicles without separate cargo compartments will use trailers to transport explosives for demolition operations and training.

2.70.1. For emergency responses in vehicles without separate cargo compartments (i.e., robot vans, Metro type vehicles, HMMWV), EOD units are authorized to transport minimum essential quantities of all HC/Ds inside the vehicle. Separate the incompatible explosives to the maximum extent possible.

2.70.2. B-1B egress system class/division 1.1 assembled components may be transported in the cargo compartment of Metro-type vehicles.

2.70.3. Basic load munitions issued to emergency response personnel in the performance of their duties are exempt from these requirements. Basic loads can include 1.1 40mm grenades, LAW rockets, etc. However, transportation of re-supply stocks must comply with all the requirements of this paragraph.

2.70.4. When units responsible for demolition operations are issued vehicles without separate cargo compartments, such vehicles may be used to transport minimum quantities of explosives necessary to support demolition operations.

2.70.5. Transport explosives in their approved storage and shipping packaging. If less than a single shipping package must be transported, pack the explosives separately from other items enclosed, clearly identified metal or wooden containers.

2.70.6. Provide personnel seats (see AFI 91-207, *The US Air Force Traffic Safety Program*).

2.70.7. Do not leave explosives-laden vehicles unattended (see paragraph **2.56.1.** for lightning exception).

2.70.8. Aircraft seats or survival kits with explosive devices installed must contain required safety pins and devices and be secured to prevent movement during transit.

2.70.9. Military Working Dog HC/D 1.1 explosive training aids may be transported and handled by qualified personnel in areas that provide realistic and effective training.

2.70.9.1. Vehicles transporting explosive dog kits must be properly placarded.

2.71. Transporting Explosives.

2.71.1. Electro-Explosive Devices. Vehicles with plastic bed liners may be used to transport EEDs that are in their original sealed outer package, box, or container. Metal ammo-type containers may be used to transport EEDs in vehicles with plastic bed liners if the containers provide the protection required by paragraph **2.12.1.** and are bonded to the metal body of the vehicle.

2.71.2. Placarding Vehicles.

2.71.2.1. Use DOT placards as outlined in Subpart F of Title 49, CFR, Part 172.

2.71.2.2. Commanders may omit placards on base where necessary to avoid attention of hostile forces. Instruct all personnel in proper emergency actions. When transporting munitions off the installation in a foreign country comply with host nation requirements.

2.71.2.3. Where tow vehicle and trailer combinations are used on base, placard the lead vehicle on the front and the last vehicle on the rear. Placard loaded vehicles in between on each side.

2.71.2.4. Placard materials handling equipment only when used in the same manner as a transport vehicle or trailer.

2.71.2.5. Placards may be omitted for HC/D 1.4 material on base.

2.71.2.6. Compatibility group letters may be omitted from the placard if the vehicle remains on the installation.

2.71.2.7. Placards are not required when transporting nuclear weapons or on any explosives loaded vehicle in a nuclear weapons storage area.

2.71.3. Load Protection. Ensure lifting devices on vehicles or handling equipment have a serviceable mechanism designed to prevent sudden dropping of the load in event of power failure.

2.71.4. Load Stability. Ensure explosives loaded on all types of vehicles and handling equipment are stable and secure before movement. Load stability is required for all movements, to include rewarehousing or other activities conducted between one or more storage magazines/pads or other operating location. “Secure” means the load is protected by an effective restraining system.

2.71.4.1. Consider vehicle and handling equipment type, type of load, and the prevailing weather and road conditions when determining if safe transport is feasible. This guidance pertains to munitions storage area as well as applicable flightline operations.

2.71.4.2. Loads on the tines of a forklift must not extend more than one-third of the height of the top tier of containers above the backrest.

2.71.4.3. To the maximum extent possible, position munitions cargo vehicles to permit loading and unloading from each side of the cargo bed. Munitions will be accessed from the side closest to the load unless access can only be obtained from one side.

2.71.5. Vehicle Refueling. Refuel non-explosives loaded vehicles and equipment at least 100 feet from structures or sites containing explosives.

2.71.5.1. When refueling explosives-loaded vehicles, maintain a bonded path between the tank being filled and the tank being emptied. Ground the entire system.

2.71.5.2. When refueling is completed, remove refueling vehicle from the storage area.

2.71.5.3. Use the smallest available size of refueling unit.

2.71.5.4. One person must be present during the entire operation. During refueling, stop motors of vehicle being refueled and refueling truck (unless refueling truck motor drives the pump).

2.71.5.5. In event of a fuel spill, immediately notify the base fire department. Do not start motors of refueling truck or unit being refueled until area is rendered safe.

2.71.5.6. For refueling aircraft use procedures in the applicable TO.

2.71.6. Exposed Explosives Precautions. Do not use battery, gasoline or diesel-powered vehicles and materials handling equipment inside any structure or building containing "exposed explosives." Vehicles or equipment may be used within the vicinity of structures containing "exposed explosives" providing:

2.71.6.1. Gasoline or diesel-powered units have exhaust system spark arrestors and, where applicable, carburetor flame arrestors (standard air cleaners).

2.71.6.2. Spark arrestors will meet military specifications for the particular equipment and will be installed so they will not become clogged in normal operation (AFOSH Standard 91-66, *Occupational Safety General Industrial Operations*, and TO 38-1-23, *Inspection and Installation of Exhaust Spark Arrestors and Exhaust Purifiers (Catalytic Mufflers) on Non-Aircraft Engines*).

2.71.6.3. Vehicle operators inspect spark arrestors before each daily use and clean them if there is an excess of carbon particles.

2.71.7. Liquefied Petroleum (LP) and Compressed Natural Gas (CNG) Fueled Vehicles. Motor vehicles or other equipment used to transport explosives which utilize LP or CNG for propulsion must

have a fuel system which complies with the current edition of the National Fire Protection Agency, Standard 58, Section 8.2.6, Engine Fuel Systems.

2.71.8. Safety Chains. Fasten safety chains between towing vehicles and trailers carrying explosives when lunette and pintle fastenings are used. Safety chains are not required when using specifically designed "breakaway control" safety features prescribed by the pertinent TO.

2.71.9. Storage. Battery, gasoline, LP, CNG, or diesel-powered equipment may be stored in a magazine, storehouse or other suitable location that contains only non-explosives materials. Keep equipment at least 10 feet from combustible material. Keep aisles clear at all times and space to minimize spread of fire from one unit to another. Equipment essential to day-to-day operations may be parked in fire-resistive buildings containing explosives. The following minimum requirements must be met:

2.71.9.1. Use fire walls and closed doors to completely separate equipment from bays, rooms or cubicles containing explosives.

2.71.9.2. Ensure designed fire-resistant ratings for the enclosures containing explosives are not degraded.

2.71.9.3. Battery charging must comply with AFOSH Standard 91-66.

2.71.9.4. Safety and fire protection personnel must review the local situation for any additional measures necessary to enhance safety.

2.71.10. Operating Inside Structures. Concentration of carbon monoxide in the operating area must not exceed the current occupational exposure limit as defined by AFOSH Standard 48-8, *Controlling Exposures to Hazardous Materials*. Consult the local bio-environmental engineer (BEE) for a determination of exposure levels, applicable exposure standards, and recommended controls.

2.72. Battery-Powered Materials Handling Equipment. Battery-powered equipment is preferred for handling explosives and should be used when possible.

2.72.1. Battery-powered equipment used within an explosives area will have all electrical cables mounted to prevent catching on stationary objects or damage by cutting or abrasion. Cables will be protected to prevent short circuiting as far as is practicable.

2.72.2. Batteries will be securely fastened. Battery boxes will give ample ventilation, with ventilation openings that prevent access to the cell terminals from the outside.

2.72.3. Battery-powered equipment must be equipped with a dead-man switch and a main service switch that can be operated from the driving position.

2.73. Gasoline or Diesel-Powered Materials Handling Equipment.

2.73.1. Equip with a standard muffler and air cleaner.

2.73.2. Ensure gas caps are in place.

2.73.3. If necessary, install a deflector plate to prevent overflow from the fuel tank from reaching motor or exhaust pipe.

2.73.4. On gravity feed fuel systems or on pump systems that can be siphoned, install an emergency shutoff valve at fuel tank or in the feed line.

2.73.5. Protect fuel lines from rupture due to vibration.

2.73.6. Securely fasten electrical connections to prevent accidental disconnection that might result in sparks or fire.

2.73.7. Do not use equipment in areas classified as hazardous locations for electrical equipment.

2.74. Motor Vehicle Transportation.

2.74.1. Cover exposed ferrous metal in the cargo compartment before transporting explosives that are not packaged in DOT specified containers or equivalent.

2.74.2. Use only static resistant and noncombustible or flameproof tops or coverings.

2.74.3. Prior to use, inspect motor vehicles used to transport explosives to determine that:

2.74.3.1. Fire extinguishers are filled and are in good working order. A minimum of two portable 2A:10BC rated fire extinguishers are required for each vehicle transporting explosives.

2.74.3.2. Electric wiring is in good condition and properly attached.

2.74.3.3. Chassis, motor, pan, and underside of body is reasonably free of oil, grease, and fuel.

2.74.3.4. Fuel tank and feed lines are secure and not leaking.

2.74.3.5. Brakes, steering, lights, horn and windshield wipers are functioning properly.

2.74.3.6. Tires are properly inflated and free of defects.

2.74.4. Chock explosives loaded vehicles and trailers parked on any grade or ramp steep enough to cause vehicle to roll.

2.74.5. Refuel trucks before loading explosives.

2.74.6. Do not operate vehicles containing explosives until the cargo has been checked to ensure safe transportation. For on base movements, explosives containers must be restrained, blocked, braced, tied down or otherwise secured to the vehicle to prevent movement and must not damage explosives or containers. Restraining devices may include chains and binders, cargo nets and tie-down straps, sideboards and tailgates, etc.

2.74.7. When transporting items containing EEDs, fully consider hazards discussed in paragraph **2.58.**

2.74.8. Do not leave explosives-laden vehicles unattended unless they are parked in a properly designated area, such as the weapons storage area, holding yard or flightline munitions holding area (see paragraph **2.56.1.** for lightning exception).

2.74.9. Ensure forklifts use skids or pallets to move containers of explosives, except when containers are designed with fully enclosed stirrups (360 degrees) for forklift tines.

2.74.10. Munitions may be carried on forklift tines when the weapon body is long enough to be firmly supported on both tines and strong enough to prevent damage.

2.74.11. Do not load or unload explosives from a motor vehicle while the engine is running, except under the following conditions:

2.74.11.1. Where the engine is required to provide power to vehicle mechanical handling equipment used in loading and unloading the vehicle.

2.74.11.2. Where necessary for emergency operations or timing for exercises simulating execution of emergency plans. In this case, small loads or packages of explosives delivered to aircraft, requiring only momentary unloading time, may be removed from a vehicle while the motor is running.

2.74.11.3. Engines of diesel-powered vehicles may continue to run during loading or unloading of explosives except when exposed explosives are involved.

2.74.11.4. Adequate ventilation is provided to prevent unnecessary build-up of exhaust gases.

2.74.12. The vehicle is kept at the aircraft or storage location no longer than needed to complete explosives loading or unloading. If a delay occurs, move vehicle from location.

2.74.12.1. Parking brakes are set and the operator remains in the driver's position or sets brakes, chocks wheels and remains close to the vehicle.

2.74.12.2. Where the vehicle was designed and built for these operations, refer to drivers manuals for accepted procedures.

2.74.13. Inspection of Incoming Shipments**.** All incoming motor vehicles carrying hazard class 1 explosives and other hazard class items that carry an explosives compatibility group, except HC/D 1.4, will be inspected at a designated inspection station by a representative of the commander before further routing on base. See paragraph **3.16.** for siting requirements

2.74.13.1. If the inspection station is used as an explosives storage or suspect vehicle holding area, it must meet Q-D criteria. Also, vehicle inspections must be stopped while storage or operations are in progress.

2.74.13.2. The inspection station may be used as an interchange yard .

2.74.13.3. Inspections will be done using DD Form 626, **Motor Vehicle Inspection (Transporting Hazardous Material**).

2.74.13.4. Once a vehicle has passed the initial inspection, a visual inspection of the external condition of the cargo may be done at any suitable location, including the unloading point.

2.74.13.5. Any vehicle found or suspected to be in a hazardous condition will be moved to a "suspect vehicle" area which is isolated from other locations by the proper Q-D, unless it is more hazardous to move the vehicle.

2.74.14. Inspection of Outgoing Shipments**.** All vehicles to be used for off-base shipments of explosives will be inspected by shipping activities before and after loading for compliance with safety regulations.

2.74.14.1. Complete DD Form 626 according to DTR 4500.9R Part 2.

2.74.14.2. Maintain a record of the vehicle number, the type of explosive cargo, and the number of each seal applied to the vehicle.

2.74.14.3. Drivers must be qualified to operate the vehicle and knowledgeable of the explosives being transported and associated hazards. In addition, Air Force civilian drivers must have a Commercial Drivers License, with a hazardous materials endorsement, to transport explosives off a military installation. See AFI 24-301, *Vehicle Operations*.

2.74.14.4. DD Form 836, **Shipping Paper and Emergency Response Information for Hazardous Materials Transported by Government Vehicles**, will be used to instruct drivers on the nature of their cargo, firefighting methods, and other specific precautions for the particular shipment. Information on the preparation and use of DD Form 836 is in DTR 4500.9R Part 2

2.74.14.5. Overseas units should use bilingual instructions on the DD Forms 626 and 836 where needed.

2.74.14.6. Where special purpose vehicles are authorized to transport explosive loads, applicable technical data will be used.

2.74.14.7. Use of DD Forms 626 or 836 is not required for military vehicles or drivers transporting explosives (assembled or partially assembled in a delivery mode) across or on public highways from one part of a base to another. For example, transportation of munitions from a preparation area across the highway to the main base flightline, or on the highway to a nearby auxiliary field. If this is a daily operation, there should be an agreement with local authorities on any local restrictions to be imposed.

2.74.15. Internal Shipments by Commercial Carrier. Commercial carriers used to move explosives over public highways from one area to another area of an installation will be externally inspected before entering the second area. This is not needed if they were escorted or under surveillance en route.

2.74.16. Interchange Yards. This location will be used for the exchange of tractor trailers between the common carrier and the base activity involved. Vehicles should be removed promptly.

2.74.17. Holding Yards**.** If the explosives-loaded vehicles cannot be dispatched to unloading points promptly, they must be moved to a holding yard. See paragraph **3.16.** for holding yard siting requirements.

2.74.17.1. Loaded vehicles should not remain in a holding yard for a period exceeding one working day.

2.74.17.2. Holding yards may be used for interchange and inspection activities. However, when loaded vehicles are being held there, the yard may not be concurrently used for vehicle inspections.

2.74.18. Maintenance of Vehicles Carrying Explosives.

2.74.18.1. Only operator inspection and maintenance normally related to the operation of a vehicle will be done on explosives-laden vehicles. Such maintenance includes servicing with fuel, oil, air, lubrication and water, changing tires, fuses, hoses and drive belts, etc.

2.74.18.2. No maintenance will be done on an explosives-loaded vehicle or trailer that would increase the probability of fire or would require the use of heat-producing equipment.

2.74.18.3. No restrictions are imposed on tractor maintenance when the tractor is separated by at least 100 feet from an explosives-loaded trailer.

2.74.18.4. When tires are being changed, the vehicle or trailer must not be elevated so as to shift the load or place an excessive strain on the tiedowns.

2.74.18.5. Vehicles carrying nuclear weapons are subject to the maintenance restrictions in TO 11N-45-51 series.

2.74.19. (Added-PACAF) Special requirements for the transportation of explosives in Japan. The additional procedures given in USFJI 24-2 apply to all US forces transporting explosives over Japanese public highways.

2.75. Transporting Dangerously Unserviceable Explosive Items for Disposal. Package and mark dangerously unserviceable items such as partially burned signals as specified in an item or EOD technical publications and OIs. Consult EOD before transporting dangerously unserviceable items other than as approved by DOT. DoD personnel who are properly trained in procedures to be followed and specific hazards of the material may routinely transport explosive item residue. Inspect vehicles using DD Forms 626.

2.76. Railroad Transportation. DOT safety regulations for safety devices, safeguards, design of equipment, etc., are mandatory for railway equipment transporting materials outside an installation. These regulations should also be followed within an installation. Special attention should be given to rail clearances to buildings, loading docks, overhead lines, etc.

2.76.1. Locomotives. Portable fire extinguishers will be carried on all locomotives and other self-propelled rail vehicles.

2.76.2. Track Layout. Railroad lines serving explosives areas should be looped to give at least two ways of exit.

2.76.3. Movement of Railcars Containing Explosives.

2.76.3.1. By Engine. Secure load and cut in air brakes before movement. Cars should not be uncoupled while in motion or pulled apart by locomotive power.

2.76.3.2. By Car Mover. Station an individual at the hand brake during any manual movement of a car.

2.76.4. Spotting Railcars.

2.76.4.1. Set hand brakes and properly chock wheels when spotting single cars. When more than one car is spotted and the engine detached, set hand brakes on the downgrade end of the cut of cars. Do not rely on the automatic air brakes to hold spotted cars.

2.76.4.2. Locomotives will not stop in front of buildings and loading docks containing hazardous materials longer than needed to "spot" cars for loading or unloading.

2.76.4.3. Cars at a magazine or building should be located so that personnel may evacuate the building or car rapidly if necessary.

2.76.5. Switching Railcars. Special care will be taken to avoid rough handling of cars.

2.76.5.1. Cars must not be "cut off" while in motion. Cars will be coupled carefully to avoid unnecessary shocks. Other cars will not be "cut off" and allowed to strike a car containing explosives.

2.76.5.2. Place cars in yards or on sidings so they can be quickly removed from the danger of fire and handled as little as possible. They will not be placed under bridges or alongside passenger sheds or stations. Engines on a parallel track should not be allowed to stand opposite or near them.

2.76.5.3. "Dropping, humping, kicking," or use of the "flying switch" is prohibited.

2.76.6. Marking Railcars with Blue Flags or Signals. Place blue flags or signals at both ends of a car when personnel are working in, on, or under the cars. Do not move or couple cars marked in this manner. The supervisor or foreman in charge of the personnel loading or unloading the cars is responsible for placing and removing the blue flag or signal. Inform train crews in the use of blue flags or signals. ***EXCEPTIONS:*** *1. Flags are not required when flat cars are involved and the presence of a working party is clearly evident. 2. Flags or signals may be omitted from the end of a car located against or toward a dead end spur. This also applies to a loading ramp where no other rolling stock can approach from that direction.*

2.76.7. Vegetation Control Along Railroad Right-of-Way. Control vegetation, which presents a fire hazard to explosive laden cars, along the railroad right-of-way on the base as directed in paragraph **2.21.2.**

2.76.8. Loading Railcars. Inspect car thoroughly, inside and out, to determine its suitability to carry the type of explosives involved. "Broom clean" the interior of the car before loading explosives.

2.76.8.1. Remove or cover protruding nails and bolt heads to prevent damage to packages. Provide substantial gangways. Remove any obstructions that may prevent free entry to the car. Clear immediate area of leaves, dry grass, and other flammable materials.

2.76.8.2. Close the car and magazine doors during loading operations when engines or speeders are passing.

2.76.8.3. Do not leave cars partly loaded unless it is impossible to finish loading at one time. In this case, lock car doors. If it becomes necessary to move a partially loaded car, brace the load.

2.76.8.4. During and after loading, properly brace and stay the shipment, then properly seal car, and keep a permanent record of car numbers.

2.76.9. Loading and Bracing. When loading freight cars, consult Bureau of Explosives Pamphlets 6 and 6A for guidance unless specific instructions or car loading drawings are available for the items involved. These pamphlets govern the method of loading, staying, and bracing of carload and less-than-carload (LCL) shipments of explosives. Refer to Bureau of Explosives Pamphlet 6C for guidance in securing truck bodies or trailers on flat cars. Also see this pamphlet for loading, blocking, and bracing of the cargo within, or on, such vehicles or containers. The carrier or cargo must not shift under an impact of 8 miles per hour from either end. Obtain Bureau of Explosives pamphlets by writing: Bureau of Explosives, 50F St. NW, Washington DC 20336.

2.76.10. Placarding of Railcars. Placard railcars transporting explosives according to paragraph **2.71.2.1.** or those of the host nation involved.

2.76.10.1. Display placards when the first container of explosives is loaded in the railcar. Remove placards when the last container of explosives is removed from the railcar. Four placards are required for each railcar. It is the responsibility of the shipper to furnish the needed placards.

2.76.10.2. Where necessary, to avoid attention of hostile forces, commanders may omit placards when arrangements are made with the host nation or governmental agency involved. Instruct all involved (including essential train crews) in proper emergency actions.

2.76.11. Railcar Requirements. Cars used for the shipment of material requiring placarding under Title 49, CFR, Part 172, must meet standards for the class of material being shipped as specified in

Title 49, CFR, Part 172. Inspect cars for HC/D 1.1 explosives before and after loading. Accomplish, distribute, and affix car certificates according to Title 49, CFR, Part 174.104.l.

2.76.11.1. Leaking Packages in Railcars. Continually be alert to detect leaking packages or leaking tank cars. Remove and repair leaking packages from cars. In the case of tank cars, transfer the contents. Switch leaking tank cars containing compressed gases to a location distant from habitation and highways. Take action to transfer contents.

2.76.11.2. Protect cars containing leaking packages or leaking tank cars to prevent ignition of liquid or vapors.

2.76.11.3. Hold to a minimum the movement of a leaking car until the unsafe condition is corrected. If artificial light is necessary, use only approved explosion proof electric lights.

2.76.11.4. Tools for Loading and Unloading Railcars. Steel tools, used with reasonable care, may be used inside cars if explosives are not exposed. When explosives are exposed, special care will be taken to prevent sparks.

2.76.12. Sealing Railcars. Seal cars containing explosives with railway-type car seals stamped with an identifying number. The shipper will keep a record of car numbers and seals (see AFJI 24-211 Vol 1, for additional car seal regulations). If the seal is not in place when the car is received, thoroughly inspect the car at a suspect car site.

2.76.13. Changing Car Seals. When a car seal is changed on a car of explosives, record the following information:

2.76.13.1. Railroad.

2.76.13.2. Place.

2.76.13.3. Date.

2.76.13.4. Number or description of seal broken.

2.76.13.5. Number or description of seal used to reseal car.

2.76.13.6. Reason for opening car.

2.76.13.7. Condition of load.

2.76.13.8. Name and occupation of persons opening car. Document this record on waybills or other forms or memorandum that accompanies car to destination.

2.76.14. Processing Incoming Loaded Railcars.

2.76.14.1. A competent representative will inspect railcars containing explosives at a designated inspection station. See paragraph **3.16.** for siting rail inspection station.

2.76.14.1.1. Inspect the outside and underside of each car to detect damage (such as defective brakes, couplings, wheel flanges, or hot boxes) or unauthorized and suspicious articles. Check individual car numbers and seal numbers against bills of lading.

2.76.14.1.2. If pits are not available, conduct inspections from ground level. Provide pits if sabotage is possible.

2.76.14.1.3. If rail traffic is heavy enough or in an emergency, a pit will help in inspecting and moving cars rapidly.

2.76.14.2. Isolate cars of explosives for prompt corrective actions when foreign and suspicious articles have been attached outside or underneath the car. Also isolate when there is a defect that could affect installation safety or car contents.

2.76.14.2.1. Move car, unless the problem prohibits, over the safest route to a location separated from other areas by proper inhabited building distances.

2.76.14.2.2. Correct the unsatisfactory conditions before the car and cargo are released from the designated "suspect car" site, unless a determination is made that they are safe to move.

2.76.14.3. If the seal numbers on a car do not correspond to the numbers shown on the bill of lading, treat as a suspect car. Remove it to the suspect car siding for additional inspection.

2.76.14.4. Visual inspection of the external condition of the cargo in cars that pass the initial inspection may be done at any suitable place, including the unloading point. Such cars may be considered reasonably safe. However, exercise care in breaking seals and opening doors because of the potential for shifted loads or leaking containers.

2.76.14.5. If warranted by the inspection results, promptly remove cars from the inspection station.

2.76.14.6. Do not use the inspection station as an explosives location or holding yard unless Q-D criteria are applied. If necessary, use the inspection station as an interchange yard (**2.76.15.** below).

2.76.14.7. Externally inspect commercial carriers used to move explosives through a public access route, from one area to another area of the installation, before entering the second area. This is not needed if it is escorted or under surveillance enroute.

2.76.15. Rail Interchange Yards. Rail interchange yards are set up and operated on the same basis as truck or trailer interchange yards. Railcars should be removed promptly.

2.76.16. Rail Holding Yards. If the car cannot be dispatched immediately to the point where it is to be unloaded, move it to a holding yard. Rail holding yards, where required, are set up and operated on the same basis as holding yards for motor vehicles. See paragraph **3.16.3.** for rail holding yard Q-D criteria.

2.76.17. Classification Yards. Where the volume of rail traffic necessitates, establish a classification yard primarily for receiving, classifying, switching, and dispatching explosives-laden rail cars. The following rules apply:

2.76.17.1. Car inspection station activities above may be done in classification yards, if such yards are remotely located according to paragraph **3.16.1.**

2.76.17.2. Interchange yard activities under paragraph **2.74.15.** may be done in classification yards, if such yards are remotely located according to paragraph **3.16.2.**

2.76.17.3. If required, open cars in the yard to remove documents or to visually inspect the external condition of the cargo if opening the car can be done in the normal manner. Freeing or repairing a stuck or damaged car door or doing any work inside a car is prohibited unless Q-D requirements can be met.

2.76.18. Trailers on Flat Cars (TOFC) or "Piggyback" Explosives Loading and Unloading. The following instructions govern use of explosives TOFC railheads:

2.76.18.1. Control loading or unloading operations to reduce exposures to a minimum.

2.76.18.2. Quickly remove trailers from the railroad car and send at once to their destination or schedule for prompt loading on arrival at the site. If there is an unforeseen delay in loading or unloading, an explosives-loaded trailer may be kept at the site for a period not exceeding one working day.

2.76.18.3. Don't open piggyback shipping trailers and containers at the site except for emergency or suspected emergency situations. ***EXCEPTION****: "Shipping and Storage Containers, Ballistic Missile" (SSCBM) received by TOFC may be opened at the site for inspection and road transport preparation as required by pertinent TOs.*

2.76.18.4. Ensure adequate tie-down of trailers to railcars and blocking and bracing of explosives in the trailer. Cargo stability in transit is essential.

2.76.18.5. Apply safety rules in this chapter on explosives-laden motor vehicles and their operation.

2.76.18.6. The provisions of *Bureau of Explosives Pamphlet 6C* apply to explosives "Piggyback" operations (lists railcars and hitches approved for TOFC service).

2.76.18.7. Except for those just discussed, do not conduct operations on explosive items or explosives-laden containers, trailers, cars, etc., unless Q-D criteria is met. See paragraph **3.16.7.** for TOFC siting requirements.

2.77. Movement of Explosives Shipments by Air. Air transportation of explosives by commercial aircraft is regulated by the DOT regulations that are incorporated into Title 49, CFR. Instructions about explosives-laden military aircraft (and certain DoD contract airlift operations) are in AFJI 11-204, *Operational Procedures for Aircraft Carrying Hazardous Material,* AFJMAN 24-204*, Preparing Hazardous Materials for Military Air Shipments,* applicable aircraft TOs, and other parts of this manual. Transportation of impulse cartridges (HC/D 1.4 only) in aircraft travel pods or bomber aircraft equipment bays is permitted if these cartridges are packed correctly in the original DOT shipping containers. This procedure will be governed by OIs, to be approved by installation weapons safety. More hazardous explosives (such as aircraft flares) are not authorized by this manual for this type of carriage. See guidance in paragraph 3.4.2.5. for using Net Explosives Weight for Quantity Distance (NEWQD) during transportation.

2.77. (PACAF) The last sentence should give guidance to see paragraph **3.4.2.3.**

2.78. Transportation of Explosives by Water. Transportation of explosives and other hazardous materials by water in vessels engaged in commercial service is regulated by the United States Coast Guard. Shipments overseas must be made according to the regulations of the carrier, the United States Coast Guard or the Department of the Army.

Section 2F—Testing, Procedures Verification, Disassembling and Modifying Explosives Items

2.79. Guidance. This section gives precautions to be taken in testing, disassembling and modifying explosives items, and munitions technical order/aircraft loading verification.

2.80. Technical Personnel and Guidance. Allow only technically qualified personnel to disassemble, modify or test explosives. Before starting munitions handling or other explosives operations, supervisors

must ensure sufficient information for the following areas is available and followed: safety, storage, transportation, maintenance, and inspection. Dry run all new procedures with inert or simulated explosives devices. Handling new or test munitions requires certification. Use inert items when possible for munitions certification.

2.81. Authorized Operations.

2.81.1. Don't use live munitions items for verification, validation, or electrical testing of aircraft or other weapons systems. This does not prevent the conduct of RDT&E and OT&E flight testing or "Built-In Test" (BIT) checks or other low-current aircraft testing with live explosives installed, as long as doing so does not conflict with other USAF/DoD guidance, such as T.O. 11A-1-33. If inert munitions items are not available in the inventory, obtain MAJCOM approval prior to using live items. Provide MAJCOM a risk assessment that includes appropriate compensatory measures.

2.81.2. Modify, test, or disassemble explosives items only under the following circumstances:

2.81.2.1. When authorized by technical orders.

2.81.2.2. When MAJCOM and, either the AFMC item manager or System Program Office (SPO) grant approval.

2.81.2.3. When EOD personnel must disassemble to do emergency render safe operations or technical intelligence.

2.82. Protective Requirements. Use operational shields, remote controlled devices, fire protection systems, and ventilator systems for protection of personnel and property. Operations such as continuity checks of electrically actuated explosives devices, propellant cutting, explosives component assembly, modification, or disassembly and demilitarization may require proven operator protection. Protection afforded to personnel must be capable of limiting incident blast overpressure to 2.3 psi (K24), stopping fragments, and limiting thermal flux to 0.3 calories per square centimeter per second. The use of protective construction, such as laced reinforced concrete walls, distance, or both to achieve personnel protection must be approved as part of the site plan and final safety submission process described in **Chapter 4**. Design and test operational shields and remote control systems to give complete protection against all potential hazards (reference MIL-STD 398). ***NOTE:*** This paragraph does not apply to rod and gun club operations.

2.82.1. The TO managing agency (AFMC) must ensure safe design of specific protective devices when required by a TO. Test for a 25-percent overload and obtain approval from the Nonnuclear Munitions Safety Board.

2.82.2. When a using command establishes a requirement for protective devices, that command must ensure that they are of a safe design.

2.82.3. Item managers will specify what operations require protective shielding in specific munitions item technical orders. As a minimum, protective shielding must be made available to personnel when test procedures cannot insure explosives are totally isolated and protected from potentially harmful environments such as electrical current or heat.

Section 2G—Command Unique Explosives Items and Situations

2.83. General Information. Storage and handling of some ammunition items are MAJCOM unique and do not fit into any criteria contained in this manual. In such cases, request guidance in writing through command channels to AFSC/SEW, describing the specific situation, explaining the ammunition item and how it will be stored and handled. The AFSC letter of approval may be incorporated into the MAJCOM supplement to this manual.

Section 2H—Space and Intercontinental Ballistic Missile Requirements

2.84. General Information. This section establishes explosives safety standards for storing, staging, maintaining, processing, assembling, handling, and testing large solid rocket motors (LSRM) and liquid propellants used in conjunction with space launch systems and Intercontinental Ballistic Missile (ICBM) test launches, and provides methods and criteria for mitigating the pre-launch risks associated with these operations.

2.84.1. These standards apply to AF locations that process, launch, and/or test launch vehicles or ballistic missiles containing more than 1,000 pounds of liquid propellants or more than 10,000 pounds of solid propellants. Quantity Distance criteria for space and ICBM systems is found in paragraph **3.40.**

2.84.2. Space launch vehicles and ICBM class missile systems use large quantities of energetic materials as fuel and oxidizer for their propulsion systems. Typically, these propulsion systems contain liquid and/or solid propellants in thousand to million pound quantities. These launch vehicles and missile systems can, under launch conditions, react much more violently than during conditions such as transportation, storage, and handling. Launch conditions include vehicles in a fully pressurized configuration such as during countdowns and rehearsals, and testing on test stands. Pressurized vehicles can present a hazard to a wide area, in some cases miles of exposure. The combination of the potential for large explosions coupled with possible wide dispersion of the threat requires different methods of mitigating explosive hazards than normally utilized for non-dynamic hazards analysis, hazard classification, threat mitigation, and quantity-distance siting. These hazards and mitigating techniques will be contained in range/test requirement documents.

2.85. Support Facilities . These include those facilities used to store, stage, or process large rocket motors and motor segments. The same facility may be used for both staging and processing these motors. Take thermal and toxic properties as well as potential explosive effects in accordance with applicable directives such as TM5-1300, *Structures to Resist the Effects of Accidental Explosions,* into consideration prior to selecting or constructing operational maintenance and staging facilities for large rocket motors and motor segments.

2.85.1. Facility design and operational processing flow must keep the physical movement of these large rocket motors and motor segments to an absolute minimum. Limit the operations performed in these facilities to those associated with the primary function of the facility. Establish safety control areas as defined in paragraph **2.86.**, for all hazardous operations in these facilities.

2.85.2. There are two basic types of support facilities for large solid rocket motors (LSRM) and motor segments; a Motor Operations and Staging Facility, and a Motor Storage Facility.

2.85.2.1. Motor Operations and Staging Facility. This facility is primarily used to process and/or assemble LSRMs and motor segments for launch operations. It also has the capability for staging

and maintaining motors and/or motor segments. Conduct operations involved with preparing LSRMs and motor segments using approved receipt-to-launch procedures or other approved technical data. Unlike many explosives operating buildings which currently exist on military installations, the large motor facilities may have many direct support personnel simultaneously performing different tasks in support of the launch preparation. These personnel must be limited to the minimum number necessary to accomplish the operation. Personnel limits will be established in the operating procedures. Scheduled and unscheduled maintenance may be performed in this facility on motors and segments in the staging area. Limit maintenance of large rocket motors and motor segments in the staging area to periodic maintenance and inspections unless a hazard risk analysis indicates other operations may be safely performed. When unscheduled or unforeseen operations must be accomplished on motor segments in the staging area, the appropriate technical team will perform an operational risk assessment in accordance with AFPAM 90-902, *Operational Risk Management (ORM) Guidelines and Tools*. AF explosives safety personnel will then evaluate and obtain approval of the safety risk assessment at the appropriate command level.

2.85.2.2. Motor Storage Facility. This facility is primarily used for long term storage of motors and/or motor segments. Keep the movement of LSRMs and motor segments into and out of storage to an absolute minimum. Hazardous operations normally performed in these facilities involve lifting and positioning LSRMs and motor segments. Selected maintenance operations may be performed in these facilities provided they are limited to periodic maintenance inspections using approved procedures. Unscheduled operations, such as repairs or the correction of discrepancies found during periodic inspections, may be performed in these facilities if a risk assessment concludes it is less hazardous to perform the maintenance in the facility than to move the segment to another isolated facility. If Government resources are at risk, the wing commander or equivalent commander must approve the task before it begins. If only commercial resources are at risk, risk assessment is the responsibility of the commercial operator. Use only safety-approved procedures when maintaining or repairing LSRMs and motor segments.

2.86. Safety Control Area. An area where personnel and equipment exposure is controlled in order to limit the risk from hazardous explosives operations. For LSRM segments, the Safety Control area is generally a circular area centered where the ordnance task is taking place; it has a radius of inhabited building distance based on the quantity of explosives which may become involved in a mishap. Certain engineering controls, such as a two hour fire wall (for HC/D 1.1) or a substantial dividing wall (for HC/D 1.1) may allow a reduction or modification in the size of the Safety Control Area. Only one hazardous explosives operation may take place in a Safety Control Area at a time. Personnel required to be in the Safety Control Area during an explosives operation will be considered essential personnel; conversely, people who do not meet this definition will be considered non-essential.

2.87. Simultaneous Operations. The large size of motor segments allows multiple operations to be easily conducted simultaneously on a single element, but the potential hazards that one task may present to another task must be carefully assessed before allowing more than one operations to proceed. Personnel performing processing or maintenance tasks on LSRM segments should stay aware of other tasks that may be in progress on the same segment. Only a single operation may be performed within the same safety control area at a time.

2.88. Barricades. Use barricades with fixed storage tanks to prevent high velocity fragments from a ground liquid fuel propellant vapor phase confined explosion striking a test vehicle on the test stand. Design these barricades according the to the criteria in paragraph **3.12.**

2.89. Space Launch Complex. A space launch complex consists of a group of related facilities used for launching space vehicles. Facilities generally included are the launch pad(s), liquid propellant storage tanks, site instrumentation facilities, engineering personnel support buildings and a blockhouse. Additional facilities could also include LSRM facilities and spacecraft processing facilities. A launch complex normally involves a variety of explosive hazards, the result of the presence of various quantities of liquid and solid propellants which can produce both mass fire and detonation explosive hazards. System safety engineering hazard analyses of the complex must be performed to identify the various explosive hazards, their relationships, the safety threat zones and launch area location. . Quantity Distance criteria is found in paragraph **3.40.**

2.90. Space Test Facilities. Space test facilities normally consist of a wide array of test resources to support customers including flight hardware (ballistic, space, sounding rocket launch vehicles and satellites) and ground systems (field test, assembly and storage, launch, and on-orbit test facilities). A space test facility typically includes liquid propellant storage tanks or test site instrumentation, facility engineering personnel support buildings and a control center. The facilities normally involve a variety of liquid and/or solid propellants which can produce both mass fire and detonation explosive hazards. System safety engineering hazard analyses of the facilities must be performed to identify the various hazards, their relationships, the safety threat zones, etc.

2.91. Risk Management. Use the principles of Operational Risk Management (ORM) found in AFPAM 90-902, *Operational Risk Management (ORM) Guidelines and Tools,* and the standard practices in SP 882, *Systems Safety Program Requirements,* to identify and assess potential hazards, then to determine and implement controls to minimize the risks associated with operations involving LSRMs and motor segments.

2.91.1. The major hazards associated with space launch vehicles and missile prelaunch and propulsion test operations involve large quantities of propellants used in propulsion systems, destruct charges, and high pressure gas systems.

2.91.2. Perform hazard assessments to measure the potential for and consequences of mishaps resulting from the undesired release of energy or inhibiting the desired release of energy. Use these assessments to define the maximum credible event (MCE).

2.91.3. Assess all launch vehicle operations to evaluate the hazards and determine the mitigating activities necessary to achieve an acceptable level of risk, both for personnel and the launch or test site. Accept no unnecessary risks.

2.91.4. Determine the expected risk before beginning any potentially hazardous operation and get approval from the appropriate supervisory level before proceeding. Risk analyses must show that the potential benefits outweigh the cost in terms of overall risk before the operation may be approved.

2.91.5. Credible Failure Modes. In order to determine the potential threat that a given launch vehicle and support system configuration poses during prelaunch or propulsive test operations, credible failure modes must be defined. The specific failure mode that occurs will have a large influence on the explosive yield and the resultant blast overpressure, fragmentation, and thermal effects and thus on the

severity of the accident environments, risk to personnel, and damage to facilities. General scenario categories include the following phases and operations:

2.91.5.1. Prelaunch/Test Operations:

2.91.5.1.1. Storage

2.91.5.1.2. Handling

2.91.5.1.3. Assembly

2.91.5.1.4. Checkout (at the assembly building and at the launch/test complex)

2.91.5.1.5. Final Assembly

2.91.5.1.6. Ordnance Installation

2.91.5.1.7. Propellant Loading

2.91.5.1.8. All-up Vehicle Checkout (prior to launch/static firing)

2.91.6. General Failure Modes. Handle the failure modes for liquid propellants and solid propellants separately because their geometric and chemical configurations are different. In the case of solid propellants, the fuel and oxidizer are already mixed homogeneously and, therefore, the failure scenarios do not have to account for mixing. Liquid propellants, on the other hand, are configured in separate storage or launch vehicle tanks, therefore, the failure scenarios must account for the type, amount, and probability of mixing propellants.

2.91.7. Typical Prelaunch Failure Mode Scenarios:

2.91.7.1. Storage

2.91.7.1.1. Liquid propellant scenarios primarily involve leaking or ruptured propellant tanks caused by loss of pressure control, insulation deficiencies, mechanical damage, and/or corrosion. Fuel and oxidizers are normally stored separately, so a maximum credible event would be limited to a fire and/or tank pressure rupture.

2.91.7.1.2. Solid propellant accident scenarios can be defined by the hazard classification grouping - 1.1 mass detonation, or 1.3 - mass fire. The most likely candidates to cause accidental ordnance initiation are introduction of stray electrical energy, fire, and dropping the segment with sufficient impact force to initiate the propellant or destruct charge if present.

2.91.7.2. Handling.

2.91.7.2.1. Handle liquid oxidizer and fuel separately using independent closed loop systems. Normally, differential pressure is used to transfer product from one holding tank to another or to load a launch vehicle. Typical accident events are limited to system leaks, vent and/or scrubber failures, or at worst, a tank rupture caused by over- or under-pressurization. Launch vehicle propellant loading scenarios are discussed in another section. Load liquid propellants serially to further reduce prelaunch mixing hazards.

2.91.7.2.2. Solid propellant rocket motors are handled by lifting with cranes or erectors at static test stands, the launch mount, in a processing facility, or by various transportation modes. Typically the MCE scenario involves vehicle rollover, or drop impacts during lifting or transportation. Drop impacts on hard surfaces can cause propellant ignition.

2.91.7.3. Booster Assembly.

2.91.7.3.1. Launch vehicle assembly processes normally do not involve liquid propellants.

2.91.7.3.2. Assembly operations for solid propellant rocket motors typically involve the same credible accident scenarios as those listed for handling.

2.91.7.4. Booster Checkout. Booster checkout normally does not impose additional hazards above and beyond those already listed except that the potential for inadvertent ignition of electro-explosive devices (EEDs) or inadvertent function of propellant system isolation valves is increased during certain electrical system checkouts. At-pad/test stand checkout normally is accomplished after solid propellant and hypergolic propellant stages are assembled and loaded, therefore, multi-faceted threats exist with interaction between hypergolic and solid propellants that can result in fires, pressure ruptures, and propulsive flight.

2.91.7.5. Final Assembly. The launch booster, upper stages, and payload final assembly process normally is accomplished on the launch pad. Both solid propellants and hypergolic liquid propellants are present during the final assembly steps A major threat involves the assembly and encapsulation of spacecraft and upper stages in facilities off the launch complex. These operations normally involve hypergolic propellants loaded in separate propellant tanks. Credible accident scenarios include puncture of one or more of the propellant tanks during assembly or checkout, impact caused by lifting, failure resulting in a dropped system, or over- or under pressurization. Since these propellants are hypergolic; the potential exists for a fire if the fuel comes into contact with an oxidizer. Another major threat involves the toxicity of these propellants. Credible accident scenarios primarily involve handling, lifting, and mating stages with tank rupture accident scenarios the result of impacts caused by improper handling or dropping one or more stages. The results are the same as those listed above.

2.91.7.6. Ordnance Installation. Ordnance installation may take place in an off-the-pad assembly building or on the launch pad. During and after installation, credible accident scenarios primarily involve inadvertent ignition of EEDs. These devices must not be capable of detonating either the solid or liquid propellant. Inadvertent ignition of these devices can result in significant damage to the vehicle and severe injury or death to personnel. Unless unavoidable, do not load cryogenic liquid propellants on a launch vehicle until after ordnance is installed.

2.91.7.7. Propellant Loading Maximum credible event accident scenarios during propellant loading involve over- or under-pressurization of the propellant tanks and major spills of fuel and/or oxidizer. These scenarios can result in a significant explosive yield.

2.91.7.8. All-Up Vehicle Checkout. This occurs prior to launch or static firing. During this phase of prelaunch operations the final liquid propellant topping off is completed and in some cases the liquid propellant and high pressure gas systems are brought to flight pressure. All systems are switched to internal power and final systems checks are performed. The MCE involves the fully loaded launch vehicle and payload. Explosive yield is based on static conditions for shock impact on solid propellants and non-dynamic mixing of liquid propellant either by the Confined by Missile (CBM) mode or the Confined by Ground Surface (CBGS) mode.

Chapter 3

APPLYING QUANTITY-DISTANCE (Q-D) CRITERIA

Section 3A—General Q-D Guidance

3.1. Introduction. The term "Quantity-Distance" (Q-D) refers to protection requirements from potential explosive sites (PES) to different kinds of exposed sites (ES). The Q-D standards were developed over many years and are based on explosives mishaps and tests.

3.1.1. When an appropriate degree of protection can be provided either by hardening an ES or construction of a PES to suppress explosion effects, these factors may be taken into account and the distance required by the standard Q-D tables may be reduced. Submit construction designs with rationale or test results with the explosives site plan. See paragraph **4.11.4.5.**

3.2. Types of Separations.

3.2.1. Inhabited Building Distance (IBD). This is the minimum distance required to protect non-explosives related facilities and personnel. At this distance some damage may still be expected (i.e. standard glass windows will shatter and unstrenthened buildings will receive 5% damage). Apply IB separation to: (*list is not all inclusive*)

3.2.1.1. Base Boundary. If a proposed PES would create an IBD clear zone extending beyond the base boundary, the hazard becomes a legal issue and the installation must obtain a restrictive easement from the land owner for the off-base land encumbered by the clear zone prior to establishing or constructing the PES. The only exception is if the area (land or water) is open and both manifestly unsuitable for habitation and for public gatherings. Only appropriate local government agencies for public safety, environment and health can declare land outside the base boundary unsuitable for habitation or public gatherings. Documentation determining this land unsuitable for habitation must be maintained with real property records. The commander, Facility Board, and facility user must be briefed and accept the need to reduce/eliminate NEWQD in the PES creating the clear zone to prevent an exception should a new encumbrance occur. The commander will designate personnel to perform a quarterly review of the area to ensure it remains open, uninhabited and unused and he/she should periodically reconsider obtaining a restrictive easement or purchasing the land. The commander, Facility Board, and facility user must be briefed and accept the need to reduce/eliminate NEWQD in the user's facility to prevent an exception should a new encumbrance occur before funding construction of the user's proposed facility. Upon DDESB-KO preliminary approval of the proposed site plan, the unit will secure the restrictive easement to prevent the encroachment from non-related personnel and facilities. Documentation substantiating the easement agreement will be submitted with the final approval request.

3.2.1.1.1. Existing Restrictive Easements. Prior to establishing any PES that will have an explosives safety clear zone extending past the base boundary SE, CE, and JA representatives must review and ensure compliance with applicable in-place restrictive easement rights.

3.2.1.2. Buildings/operations involving people not related to munitions/explosives work.

3.2.1.3. Main power houses providing vital utilities to a major part of the installation.

3.2.1.4. Essential warehouses, shops and other facilities that must not be placed at risk because of their vital nature in supporting the mission.

3.2.1.5. Functions which would cause an immediate secondary hazard because of their failure to operate.

3.2.1.6. Joint DoD-Non DoD use runway.

3.2.1.7. Electrical transmission lines carrying 69KV or more, and the tower or poles supporting them, if the line in question is part of a grid system serving a large off-base area. This distance is based on blast overpressure only, fragment distances will not be used.

3.2.1.8. EOD facilities (offices, classrooms, shops) if they support multiple locations or organizations.

3.2.1.9. High Density Public Traffic Routes. These routes are considered "high density" if they have 10,000 or more car and/or rail passengers per day, or 2,000 or more ship passengers per day. When making an estimate of traffic density, use the default value of two passengers per car. Traffic density shall be averaged over a normal (non-holiday) week in terms of the passengers during a 24-hour period. See **Attachment 10** for additional guidance.

3.2.1.10. Ground control approach (GCA), radar approach control (RAPCON), and air traffic control towers that support a joint use airfield (from all PESs). Use incremental IBD for GCA, RAPCON, and air traffic control towers that support a military use only airfield from non-flight-line PES.

3.2.1.11. Flight-line passenger terminals.

3.2.1.12. Structures such as concession stands or bleachers at open recreational sites.

3.2.2. Public Traffic Route (PTR) Distance. This is the minimum permissible distance between PESs and PTR exposures. For HC/D 1.1 and 1.2, it is normally 60% of inhabited building distance. PTR and IB for HC/D 1.3 and 1.4 are the same. Apply PTR separation to: (list is not all inclusive) (see **Attachment 10** for additional guidance)

3.2.2.1. Open passenger load and unload areas.

3.2.2.2. Joint DoD - Non DoD use taxiway. A taxiway serving both DoD and commercial aircraft. A taxiway serving solely DoD chartered, or Non-DoD aircraft on DoD authorized business is not joint use.

3.2.2.3. Open recreational facilities where structures are not involved (such as ball diamonds and volley ball courts) used for morale and health purposes at air bases and other operational military activities. When recreation facilities are solely for off-duty military personnel at their duty location, neither blast nor fragment Q-D apply. This total relaxation of Q-D requirements applies only when the PES and the ES are related closely as with a security alert force and explosives facilities for which they are responsible; it does not authorize the building of elaborate structures that substitute for properly sited recreational facilities or the collocation of unrelated military functions.

NOTE: When structures, such as concession stands or bleachers exists, apply IB criteria.

3.2.2.4. Military only training areas or other combatant-type exercises and similar fixed facilities (including small classrooms) designed for use by groups or classes.

3.2.2.5. Personnel exposed to explosives research, development and test operations that are conducted by remote control procedures. Fragment protection will also be provided for personnel exposed to or involved in these type operations.

3.2.2.6. Medium traffic density. If routes have 400 or more, but less than 10,000 car and/or rail passengers per day, or 80 or more, but less than 2,000 ship passengers per day, then 60% of the specified minimum fragmentation distance for IB applies. Medium traffic density criteria apply, as a minimum, to recreational activity that is extensive and occurs on a regular basis. If routes have less than 400 car and/or rail passengers per day, or less than 80 ship passengers per day, then no minimum fragmentation distance is required (this small number of passengers is considered low density). Minimum distance shall be based on blast criteria (K24/K30) only. See **Attachment 10** for additional guidance.

3.2.2.7. Incremental PTR distance will be used for electrical distribution lines (those carrying less than 69 KV) and the towers or poles supporting them, and unoccupied electrical substations/transformer stations.

3.2.2.8. Transmission lines (those carrying 69 KV or more) can be at PTR if loss of the line will not create serious social or economic hardships. Distance is based on blast overpressure only, fragment distance will not be used.

3.2.2.9. Aircraft battle damage repair training areas.

3.2.3. Intraline (IL) Distance. IL distances provide the minimum amount of protection to activities associated with explosives. Applying IL recognizes the operational need for some people to be in the proximity of explosives while at the same time preserving some mission capability in the event of an explosives accident. Unhardened facilities at this distance will be extensively damaged and its occupants may be severely injured. Service provided by this facility (excluding sensitive electronic equipment) should continue. In addition to the minimal protection to related activities, IL separation will prevent propagation between two explosives locations. At IL distance, no propagation from the blast overpressure is expected, and the probability of propagation from low angle, high velocity fragments is significantly reduced. Apply IL distance to: (See paragraph **3.13.** for specific applications of IL)

3.2.3.1. Any two explosives operating locations.

3.2.3.2. Explosives operating buildings from explosives storage locations. See paragraph **2.32.** for operations allowed at storage locations.

3.2.3.3. Activities that directly support the explosives operation or area.

3.2.3.4. Facilities of a tactical missile site where people are present.

3.2.3.5. Certain other facilities exclusively serving explosives areas or locations, see paragraph **3.13.**

3.2.3.6. Construction activities exposed by explosives facilities or operations. This separation requirement applies to all construction activities whether being accomplished by civilian or military personnel. If this separation cannot be maintained, obtain a waiver as part of the Explosives Site Plan (ESP) package. Include a risk assessment and control measures. See **Chapter 5**. For those construction projects that do not require a site plan, i.e. internal facility modifications or non-explosives auxiliary storage facilities meeting NFPA criteria, document a risk assessment

including the control measures taken. Locally maintain the documentation until operations have been completed and personnel have permanently vacated the work site.

3.2.3.7. See paragraph **3.13.** for additional guidance.

3.2.3.8. GCA, RAPCON, and air traffic control towers that support a military use only airfield from flightline PES.

3.2.4. Intermagazine (IM) distance. This is the minimum distance between PESs to prevent one PES from simultaneously detonating an adjacent PES. Maintaining IM is no guarantee that propagation from one PES to another will not occur, only that they will not simultaneously detonate. NOTE: An exception to this principle is earth covered magazines (ECM); maintaining IM between ECMs will not only prevent propagation, both simultaneous and delayed, but preserve the assets in the adjacent ECM.

3.2.4.1. IM separation depends on the type of magazine, orientation, hazard classification, and quantity of explosives stored. It is expected to prevent simultaneous detonation from blast overpressure from one magazine to another and offers reasonable protection against propagation from fragment impact. It does not protect magazines, except possibly earth-covered magazines, from severe structural damage. When less than required intermagazine separation exists between any two or more explosives storage locations, the quantities of explosives in these locations must be added to form a single PES encompassing the area and NEWs of the PESs which don't meet IM distance. For this reason, any separation between explosives locations less than IM distance may not be waived.

3.2.5. Minimum Distance. For some ammunition items, the IB, PTR, (and in some cases IL) distances may be reduced below specified minimums, based on primary fragment or firebrand hazards that are created. When this is the case, the minimum IB distance is specified by a number (indicating hundreds of feet) in parentheses as part of the hazard classification. Also, for items inside buildings, minimum building debris distances may apply, even if the primary fragment or firebrand distance is not prescribed. More detailed minimum distance guidance is given, by explosive hazard division, in paragraph **3.5.**

3.3. Concurrent Operations. When necessary to conduct more than one explosive operation within a single facility, the operations must be arranged to provide a minimum of intraline protection either by distance or equivalent protection. See paragraph **3.3.3.** For example, a 12" reinforced concrete wall designed with a minimum compressive strength of 2,500 psi provides equivalent intraline protection, providing the detonation from the amount of HC/D 1.1 explosives does not breach the wall. For breaching calculations, HC/D 1.2 will be treated as HC/D 1.1 when out of the packing container. When in its approved packing and shipping configuration the NEWQD of HC/D 1.2 items will be based on the NEWQD assigned to that national stock number.

3.3.1. The formula to determine the allowable Net Explosive Weight (W*)* for a known standoff distance (D) up to a maximum of 20 feet is: $W=9.88D^{.858}$ ***NOTE:*** The formula can not be used for distances beyond 20 feet.

3.3.2. The formula to determine Standoff Distance (D) for a known quantity of explosives (W) up to a maximum of 129 pounds is: $D=(W/9.88)^{1.1655}$ (Additional detail and explanation of how to apply this formula may be found in TM5-1300, *Structures to Resist the Effects of Accidental Explosions.*)

3.3.3. Partial calculated criteria to prevent breaching (intraline protection) based on a 12 inch reinforced concrete wall with explosives 3 feet off of floor (see **Table 3.1.**).

Table 3.1. Distance to Prevent Breaching (Intraline Protection).

Standoff distance (ft)	3	5	7	10	15	20
Maximum NEWQD (lbs)	25	39	52	71	100	129

3.3.4. Successive steps within a single explosives process or operation will be provided as much protection as practical, but do not require separation. Maximum facility limits must be observed. If the successive steps are housed in separate facilities provide IL separation between facilities.

3.3.5. A 12-inch reinforced concrete wall provides equivalent intraline protection for 5,000 pounds of HC/D 1.3 if packaged in its shipping/transportation configuration and 300 pounds of HC/D 1.3 if it is not packaged.

3.3.6. A 30-inch reinforced concrete wall provides intraline protection against the effects of an item containing not more than 50 pounds of high explosives when the nearest part of the item is at least 3 feet from the wall and 2 feet from the floor.

3.3.7. A 36-inch reinforced concrete wall provides adequate protection against the effects of an item containing not more than 70 pounds of high explosives. The same separation distance as stated in **3.3.6.** above applies.

3.3.8. If an operation requires NEWs in excess of those that will prevent breaching of a wall, vacating the adjacent bay would provide equivalent IL protection as long as the weight stays under 200 pounds of high explosives.

3.4. The Hazard Classification System.

3.4.1. The DoD hazard classification system is based on the system recommended for international use by the United Nations Organization. It consists of nine classes for dangerous goods. Most ammunition and explosives items are included in "Class 1, Explosives." Some items that contain a small amount of explosives and also one or more other hazardous materials may be assigned to a different class (2 through 9), based on the predominant hazard. Any item that contains explosives, but is assigned to other than Class 1 due to the predominant hazard, is considered to have a net explosive weight of zero for Q-D determinations. Even though such items are assigned to other than Class 1, they will still have a DoD storage compatibility group designation, and may be combined in storage with compatible Class 1 items. They do not contribute to the explosive weight calculated for the storage site. When other than Class 1 ammunition items are stored alone, the storage site shall be treated as a warehouse (see paragraph **3.18.**).

3.4.2. A hazard classification is assigned for each ammunition and explosive item in the form and packaging in which it is normally stored and offered for transportation as cargo in commercial or military vehicles. DoD final hazard classifications are listed in TO 11A-1-46 and in the DoD Joint Hazard Classification System. DoD interim classifications are documented in memoranda issued by the various DoD authorities listed in TO 11A-1-47.

3.4.2.1. Air Force organizations that develop, or first adopt for use, ammunition or explosive items are responsible for obtaining hazard classifications using the procedures in TO 11A-1-47. The hazard classification reflects the type and degree of hazard associated with the item and is

used to determine the degree of protection (such as distance separation) needed for various exposed locations and people.

3.4.2.2. When ammunition or explosive items are not in the form and packaging in which they are normally stored and shipped, different hazard classifications may apply due to changes in spacing, orientation, confinement, and other factors. Sometimes testing of unpackaged components may be required in order to demonstrate the validity of classifications used for siting unpackaged ammunition, or conservative assumptions must be made about the potential severity of an accidental explosion. In many cases, these "unpackaged" or "in-process" hazard classifications will be established and approved as part of the site plan approval process described in **Chapter 4**.

3.4.2.3. Two hazard classification data elements are the *net explosive weight* (NEW) and the *net explosive weight for QD* (NEWQD). The NEW listed in the Joint Hazard Classification System (JHCS) listing is the total weight of all explosive, propellant, and pyrotechnic material in one article. Transportation regulations require documentation of the NEW on shipping papers for transportation. The NEWQD is equal to the NEW unless hazard classification testing has shown that a lower weight is appropriate for QD purposes. If the NEWQD is less than the NEW, the reason is usually that propellant or other substances do not contribute as much to the blast effect as the same amount of high explosives would. In all cases involving siting or QD, use the NEWQD. For example, when determining whether or not an explosive cargo load is within the limit for which a hot cargo pad is sited, use the NEWQD. Other weights that may be of interest are listed in the JHCS, including the *high explosive weight* (HEW), and the *net propellant weight* (NPW).

3.4.2.4. For assistance in determining the hazard classification for an item, contact AFSC/SEW.

3.5. Hazard Classes and Divisions. Class 1 is divided into six divisions which show the types of hazards expected.

3.5.1. Class/Division 1.1 (Mass-Detonating).

3.5.1.1. Items in this division are principally a blast hazard and may be expected to mass-detonate when a small portion is initiated by any means.

3.5.1.2. These explosions generally cause severe structural damage to adjacent objects. Propagation may occur so rapidly to explosives stored nearby which are unprotected from the initially exploding stack, that the quantities must be considered as a single source for Q-D purposes. The combined shock wave, in this case, is the same as a single detonation of a charge equal to the total of the stacks. (See simultaneous detonation in **Attachment 1**)

3.5.1.3. Items in HC/D 1.1 include bulk high explosives, some propellants, mines, bombs, demolition charges, some missile warheads, some rockets, palletized projectiles loaded with TNT or Comp B, mass-detonating cluster bomb units (CBU), and ammunition components having mass-detonating characteristics.

3.5.1.4. Explosives and munitions in HC/D 1.1 will also generally present a fragmentation hazard, either from the case of the explosive device or from the packaging or facility in which the explosives are stored. Unless otherwise specified, a minimum distance of 1,250 feet will be used to separate HC/D 1.1 explosives NEWQD of 450 pounds or more from inhabited buildings. For NEWQD between 31-450 pounds use **Table 3.9.** or **Table 3.26.** Some munitions items have been tested and demonstrated to have less than the specified 1,250 ft fragment hazard. In these

instances, the minimum IBD will be given in parentheses where the hazard classification is listed, such as (07)1.1 for a 700-foot minimum IBD.

3.5.2. Class/Division 1.2 (Nonmass-Detonating, Fragment-Producing).

3.5.2.1. HC/D 1.2 items will not mass detonate when configured for storage or transportation if a single item or package is initiated. When these items function, the results are burning and exploding progressively with no more than a few reacting at a time. The explosion will throw fragments, firebrands, and non functioned items from the point of initiation. Blast effects are limited to the immediate vicinity and are not the primary hazard.

3.5.2.2. The effects produced by the functioning of HC/D 1.2 items vary with the size and weight of the item. HC/D 1.2 ammunition is separated into three sub-divisions (1.2.1, 1.2.2, 1.2.3) in order to account for the differences in magnitude of these effects for purposes of setting quantity-distance criteria. The more hazardous items are referred to as HC/D 1.2.1 items and have an NEWQD greater than 1.60 pounds. The less hazardous items, referred to as HC/D 1.2.2, have an NEWQD less than or equal to 1.60 pounds per item. These two HC/D 1.2 sub-divisions are shown below with their definitions:
HC/D 1.2.1: NEWQD > 1.60 pounds
HC/D 1.2.2: NEWQD ≤ 1.60 pounds

3.5.2.3. The maximum credible event (MCE) for a specific class/division 1.2.1 item is the largest quantity of explosives expected to explode at one time when a stack of those specific items is involved in a fire. MCEs will be included in the JHCS and T.O. 11A-1-46 data for each class/division 1.2.1 item. If the MCE is not available, use the default MCE determined by multiplying NEWQD in a single container by three. Access to the JHCS can be made through the internet at **http://www.dac.army.mil/es/est/hc.asp** or with links through the Air Forces Safety Center home page at **http://safety.kirtland.af.mil**.

3.5.2.4. The quantity distances specified for HC/D 1.2 ammunition achieve the desired degree of protection against immediate hazards from an incident. Events involving HC/D 1.2 items lob large amounts of unexploded rounds, components, and subassemblies, which will remain hazardous after impact. Such items are likely to be more hazardous than in their original state because of possible damage to fuze safety devices or other features by heat and impact. Many types of munitions containing sub-munitions, such as cluster bombs, can be expected to be projected out to distances as great as the relevant inhabited building distances. Furthermore, it is impractical to specify quantity distances which allow for the maximum possible flight ranges of propulsive items.

3.5.2.5. HC/D 1.2.3 (Unit Risk HC/D 1.2) is a special storage sub-division for munitions that satisfies either of the following sets of criteria:

3.5.2.5.1. Munitions that do not exhibit any sympathetic detonation response in the stack test or any reaction more severe than burning in the external fire test, bullet impact test, and the slow cook-off test; or

3.5.2.5.2. Munitions that satisfy the criteria for HC/D 1.6 except the item contains a non-EIDS device. See paragraph **3.5.6.**

3.5.3. Class/Division 1.3 (Mass Fire). These items burn vigorously, and the fires are difficult to put out. Explosions are usually pressure ruptures of containers, which may produce fragments (especially missile motors), but will not produce propagating shock waves or damaging blast overpressure

beyond intermagazine distance. A severe hazard of the spread of fire may result from tossing about of burning container materials, propellant, firebrands, or other debris. Depending on the amounts of burning explosive materials, their downwind toxic effects usually do not extend beyond IB distances.

3.5.4. Class/Division 1.4 (Moderate Fire, No Blast). These items present a fire hazard but no blast hazard. There is virtually no fragmentation or toxic hazard beyond the fire hazard clearance ordinarily specified for high-risk materials.

3.5.5. Class/Division 1.5 (Very Insensitive Explosive Substances) (VIDS). This division comprises substances that have a mass explosion hazard but are so insensitive that there is very little probability of initiation or of transition from burning to detonation under normal conditions of transport or storage.

3.5.6. Class/Division 1.6 (Extremely Insensitive Explosive Articles) (EIDS). This division comprises articles that contain only extremely insensitive detonating substances and that demonstrate a negligible probability of accidental ignition or propagation. ***Note:*** Fuzed HC/D 1.6 munitions must contain either an EIDS fuze or a non-explosive fuze (fuze contains no explosives); otherwise the munition is classified as Unit Risk Hazard Division 1.2 (HC/D 1.2.3)

Section 3B—Q-D Application

3.6. General Information. Q-D separations are based on an acceptable level of damage between a PES and an ES. Q-D principles consider factors that include:

3.6.1. The construction and type of PES.

3.6.2. The explosives content of the PES.

3.6.3. The construction of the ES.

3.6.4. The distance separating the PES from the ES.

3.6.5. Orientation of the PES and the ES in the case of igloos and modules.

3.7. Determining Explosives Content of Items. The net explosive weight (NEW) or the net explosive weight for Q-D (NEWQD) of a specific explosive, explosive item, component or assembled weapon can be found in TO 11A-1-46.

3.8. Determining the Explosives Content of a PES. The combined bulk explosives weights of munitions items is not necessarily the weight used for Q-D calculations. Q-D is based on the maximum credible event (MCE), or the worst case explosion that is expected to occur. Follow these steps: (see paragraph **3.34.** for tactical missiles).

3.8.1. Determine the explosives weight of each type of munition involved and the total NEWQD of each explosives HC/D.

3.8.2. When all items stored in a single building or location are of the same HC/D, use the applicable column of **Table 3.3.** for that HC/D.

3.8.3. When combining mass-detonating and nonmass-detonating ammunition and explosives (excluding HC/D 1.4), consider the distance for the combined explosives weight of HC/D 1.1, 1.2 and 1.3 first as HC/D 1.1 then as 1.2 and finally 1.3. The required distance is the greater of the three. HQ

AFSC/SE grants exceptions to this policy when analyses or test results demonstrate that the class division 1.1 (for liquid propellants) or 1.2 will not cause detonation of the class division 1.3 explosives.

3.8.4. When storing mixed sub-divisions of HC/D 1.2 munitions (i.e., 1.2.1, 1.2.2, and 1.2.3), consider each sub-division separately and apply the greater of the distances. Do not combine the explosives weights.

3.8.5. For combinations of nonmass-detonating ammunition and explosives of different HC/D 1.2, 1.3, and 1.4, determine the required separation for each HC/D according to **Table 3.3.** Use the greatest separation of those determined.

3.8.6. Very insensitive detonating substances (VIDS) (HC/D 1.5) are stored as though they were class division 1.1.

3.8.7. For extremely insensitive detonating substances (EIDS) (HC/D 1.6) refer to **Table 3.10.** When HC/D 1.6 munitions are located with other HC/Ds, the following rules apply:

3.8.7.1. Consider HC/D 1.6 as HC/D 1.1 when stored with HC/D 1.1 or HC/D 1.5.

3.8.7.2. Consider HC/D 1.6 as HC/D 1.2 when stored with HC/D 1.2.

3.8.7.3. Consider HC/D 1.6 as 1.3 when stored with HC/D 1.3.

3.8.7.4. Munitions that satisfy the criteria HC/D 1.6 except the item contains a non-EIDS device, consider as HC/D 1.2.3.

3.8.8. The Department of Defense Explosives Safety Board (DDESB) assigns EIDS loaded ammunition or fuzes to either HC/D 1.2, 1.3, 1.4 or 1.6 depending on design and configuration. See TO 11A-1-46 for the assigned classification. US titled munitions with EIDS have been certified for classification as 1.4 (except in the United Kingdom where HC/D 1.2 must be applied) with compatibility Group N. If dissimilar Group N munitions are mixed together and have not been tested to assure non-propagation, the mixed munitions are considered to be 1.2D. When EIDS ammunition is stored with compatible items of other HC/Ds, the most restrictive HC/D present applies to the combination.

3.8.9. US personnel and US titled munitions must be accorded the Q-D separation standards required by USAF/DoD, even at foreign locations. US units will document their adherence to these standards by showing that US ESs are located at the required separation distances from host nation PESs. US ESs will be sited according to **Chapter 4**, and host nation PESs identified, on site plans. Host nation PES explosives clear zone arcs will be based on the maximum NEW the host nation indicates will ever be present at that PES location. The identification of host nation PESs does not constitute "siting" because the US does not authorize NEWs for host nation facilities not under US control. When reasonable efforts fail to obtain the explosives contents of host nation facilities that may be hazarding US Air Force facilities and personnel, the responsible safety staff estimates the type and quantity of explosives. Base estimates on knowledge of the host nation's military mission and type of facility involved (i.e., igloo, HAS, maintenance facility, above ground magazine, etc.) As a general rule, estimate the maximum explosives contents shown in paragraph **3.11.3.** using Air Force standards, (i.e., the type of facility, distances and explosives involved). If a violation of US criteria to US targets is possible based on this analysis, obtain a waiver or exemption as outlined in **Chapter 5**. If correction of the problem is beyond US capabilities, notify the host nation commander by letter from the waiver approval level, as ascertained by use of the nomograph in **Chapter 5**. Attach to this letter enough information to convey the location, nature and extent of the potential explosives hazards. While other

countries are not obligated to follow our rules, it may be helpful to explain to our hosts that US Q-D standards are enforced on our bases, and are based on testing, experience, and scientific analysis.

3.9. Exposed Sites. Most common exposed sites are defined in **Attachment 1** and listed in **Table 3.3.**

3.10. Measuring Distance.

3.10.1. Measure the distance to or from the outside of the nearest wall of the structure or room containing explosives.

3.10.2. When a structure is subdivided so that mass detonation between compartments will not occur, measure from the outside of the nearest wall of the compartment containing the greatest quantity distance hazard.

3.10.3. Take measurements for open storage, such as modules and revetments, from stack face to stack face.

3.10.4. Where explosives are outdoors on open vehicle or open railcars, measure distances to and from the explosives. This also applies to explosives carried externally on aircraft which are parked either in the open or inside approved lightweight shelters.

3.10.5. In hardened aircraft shelters (HAS), measure distances from the external wall of the shelter or stall containing the explosives or explosives-loaded aircraft.

3.10.6. Measure distance from the center of large missile silos, launchers or launch pads.

3.10.7. Measure to the nearest point of a non-explosives location, building, aircraft or taxiway.

3.10.8. Measure to the centerline of the runway.

3.10.9. Measure to the nearest edge of open recreational areas. For golf courses, measure to the nearest edge of the tee or green or to the centerline of the fairway.

3.10.10. Determine front, rear and side exposures to and from igloos and a HAS according to **Figure 3.4.**

3.10.11. Measure separation distances along a straight line except as noted in paragraph **3.10.13.**

3.10.12. Express all distances in feet.

3.10.13. For large intervening topographical features such as hills, measure distance over or around the feature, whichever is shortest.

3.10.14. Measure from the edge of facility pad if it will be used to hold munitions.

3.10.15. Measure to edge of aircraft cargo hold for internally-loaded explosives.

3.10.16. Measure to the edge of the roadway/pavement for PTRD.

3.11. Determining Q-D Separations. **Table 3.3.** shows the Q-D criteria for each HC/D, type of PES, and type of ES. Special consideration for specific facilities is shown in Section C. Separation criteria generally fall into two categories:

3.11.1. K-Factors. Net explosives weight is used to calculate Q-D separations by means of the formula: $D=KW^{1/3}$

Where: D = required distance (in feet),
K = protection factor depending on the degree of risk assumed or permitted
$W^{1/3}$ = cube root of the net explosives weight (in pounds)

Distance requirements are sometimes expressed by the value of K, using the terminology K9, K11, K18, to mean K equals 9, K equals 11, K equals 18, etc. When the criteria are expressed as a K-factor, go to the applicable column of **Table 3.6.** to find the required separation corresponding to the explosives content of the PES under consideration. For an existing PES, the maximum explosives content allowed is determined by the actual distance to the ES, as shown in the applicable column of **Table 3.6.**

3.11.2. Minimum Distances. While K-factor criteria provide protection against blast, minimum distances, when shown in **Table 3.3.**, are based on fragment distances (paragraph **3.2.5.**) and provide protection from most hazardous fragments. As such, these distances cannot be reduced, except for some specific exceptions listed in the notes to **Table 3.3.** and in paragraphs **3.32.** through **3.39.** Minimum distances fall into two categories:

3.11.2.1. General distances for HC/D **1.1.** Where specific item testing or analogy has not established a fragment distance for a HC/D1.1 item, or when structure debris is involved, a 1,250 feet minimum IB distance is required in most cases (see **Table 3.26.** for exceptions).

3.11.2.2. Specific minimum distances for HC/D 1.2.x and some HC/D 1.1 and 1.3 explosives. Based on testing or analogy, fragment distances have been determined for some specific stock-listed items. Specific minimum distances, when known, are shown in hundreds of feet by a numerical Figure (in parentheses) to the left of the HC/D designator. For example, (07)1.1 would indicate a HC/D 1.1 item with a 700-foot minimum IB distance. Minimum PTR distance (paragraph **3.2.2.**) would be 60 percent of 700 feet, or 420 feet.

NOTE: These are minimum distances for HC/D 1.1 items stored or used in an open area. For large quantities of hazard HC/D 1.1 items, consider the total NEWQD content of the PES since the overpressure may require a greater separation.

Large quantities exist when the maximum credible event exceeds the following limits:

a. (04) 1.1--1,000 lbs

b. (05) 1.1--1,953 lbs

c. (07) 1.1--5,359 lbs

d. (08) 1.1--8,000 lbs

e. (12) 1.1--27,000 lbs

f. (14) 1.1--42,875 lbs

g. (18) 1.1--91,125 lbs

3.11.2.3. The quantity of explosives allowed in each PES is the most restrictive amount based on analyzing the nearest IM, IL, PTR, IB or other exposed site (ES) using the criteria in **Table 3.3.** Where the intersecting block in **Table 3.3.** shows one or more K-factors and minimum distances, the required separation is the greater of those calculated by K-factor or minimum distances.

Where there are two or more adjacent ESs, the quantity allowed at the PES is the smallest of the amounts permitted by considering each ES in turn. Use the criteria in **Table 3.3.**

3.11.2.4. Where explosives are located in a common facility or location and are further subdivided into groups by intermagazine distance or equivalent protection, the subdivision requiring the greatest distances apply. Where IM or equivalent protection is not provided, use the total NEWQD of all explosives.

3.11.2.4. (PACAF) The maximum credible event (MCE) will not exceed 500,000 lbs NEW.

3.11.3. Regardless of actual separations, maximum quantity limitations for certain hazard HC/Ds and type of PES, are as follows:

Table 3.2. Maximum HC/D 1.1, 1.2.1, and 1.2.2 Explosives Allowed.

Type PES	NEW (lbs)
Igloo (7-Bar, 3-Bar & Undefined), (7-Bar Navy box type A&B) and Aboveground Magazines	500K
Igloo (7-Bar Navy box type C, D, E &F)	350K
Nonstandard igloo (See Note) and Modules at K1.1	250K
Aircraft shelters	11K
Ready service storage facilities	22K
Combat aircraft parking area	50K

NOTE: Non-Standard igloos sited prior to February 1999 for explosives weights not exceeding 250,000 pounds remain valid. Future sitings, including those where these igloos are ES's, must reflect the appropriate criteria in **Table 3.3.**

3.11.4. TO 11N-20-7, *Nuclear Safety Criteria*, provides active materials storage standards for nuclear weapons and when more restrictive, those requirements override Q-D criteria in this manual.

3.11.5. If unable to verify Q-D criteria for a specific weapon system or a given situation, contact the appropriate MAJCOM for instructions. Such cases may include unusual circumstances, configurations, protection or hazards.

3.11.6. Separate the following hardened facilities at reduced intraline (related facility) distance based upon their degree of hardening. Locate occupied facilities no closer than 300 feet from any PES HAS (except 3rd generation) sited for more than 500 lbs NEW. Locate no closer to 3rd generation PES HAS than the minimum distances in note 62 to **Table 3.3.** For HC/D 1.2 items, use incremental related facility criteria (no minimum fragment distance) for these facilities.

3.11.6.1. Liquid Oxygen (LOX) Storage Facility - K9. The Q-D for hardened LOX generation facilities is the same as the Q-D for hardened LOX storage tanks.

3.11.6.2. POL Truck Shelters - K9. Parking area for fuel service trucks unrelated to the PES, use IBD

3.11.6.3. Chemical Biological Radiological (CBR) Collective Protection Facility - K7.

3.11.6.4. Hardened Squadron Operations Facility - K7.

3.11.6.5. Response Force Tactical Facility (RFTF) - K9.

3.11.6.6. Survivable Collective Protection System (SCPS) with 5 feet of Earth Cover - K3. With less than 5 feet of earth cover (never less than three feet) - K5. SCPS built before 1 September 1988 at less than 300 feet do not require a waiver or exemption.

Table 3.3. Quantity-Distance Criteria.

HAZARD CLASS/DIVISION 1.1 (35)													
	COLUMN		1	2	3	4	5	6	7	8	9	10	
LINE	FROM: POTENTIAL EXPLOSIVES SITE (PES)		EARTH COVERED IGLOO (1)			BARRI-CADED MODULE	ABOVE GROUND MAGAZINE UNBARRI-CADED	ABOVE GROUND MAGAZINE BARRI-CADED	OPERATING LOCATION REMOTELY CONTROLLED	OPERATING LOCATION UNBARRI-CADED	OPERATING LOCATION BARRI-CADED	MISSILE BATTERY DEFENSIVE	LINE
	TO: EXPOSED SITE (ES) (10)(72)(76)		SIDE (61)	REAR (61)	FRONT (5)(39)	(38)	(2) (3) (5)	(2) (3) (5)	(76)	(46) (5)	(3) (46) (5)		
1	Side Si	7 Bar	K1.25 (14)	K1.25 (14)	K2.75 (14)	K4.5	K4.5	K4.5	K4.5	K4.5	K4.5	K4.5	1
	Side	3 Bar	K1.25 (14)	K1.25 (14)	K2.75 (14)	K6	K6	K6	K6	K6	K6	K6	
	EARTH	Undef	K1.25 (63)	K1.25 (63)	K4.5 (63)	K6	K6	K6	K6	K6	K6	K6	
	COVERED	"	K2 (64)	K2 (64)	K6 (64)								
2	IGLOO (1)	7 Bar	K1.25 (14)	K1.25 (14)	K2	K4.5	K4.5	K4.5	K4.5	K4.5	K4.5	K4.5	2
	Rear	3 Bar	K1.25 (14)	K1.25 (14)	K2	K6	K6	K6	K6	K6	K6	K6	
	Rear	Undef	K1.25 (14)	K1.25 (14)	K2	K6	K6	K6	K6	K6	K6	K6	
3	Front	7 Bar	K2.75 (14)	K2	K6	K6	K6	K6	K6	K6	K6	K6	3
	(39)Unbari	3 Bar	K4.5	K4.5	K9	K9	K9	K9	K9	K9	K9	K9	
	(5) -caded	Undef	K6	K6	K11	K11	K11	K11	K11	K11	K11	K11	
4	Front	7 Bar	K2.75 (14)	K2	K6	K6	K6	K6	K6	K6	K6	K6	4
	Barri	3 Bar	K4.5	K4.5	K6	K6	K6	K6	K6	K6	K6	K6	
	-caded	Undef	K6	K6	K6	K6	K6	K6	K6	K6	K6	K6	
5	ABOVE GROUND MAGAZINE UNBARRICADED (2)		K6	K6	K11 (7)	K6	K11 (78)	K6	K11	K11	K6	K11 (7)	5
6	ABOVE GROUND MAGAZINE BARRICADED (2) (3)(5)		K6	K6	K6	K6	K6	K6	K6	K6	K6	K6	6
7	BARRICADED MODULE (38)		K1.25 (14)	K1.25 (14)	K6	K1.1 (4)	K6	K6	K6	K6	K6	K6	7
8	OPERATING LOCATION UNBARRICADED		K18 (6) (61)	K18 (6) (61)	K18 (61)	K18 (6)	K18 K18	K18 (6)	K24 K24	K18 K18	K18 (6)	K18 K18	8
9	OPERATING LOCATION BARRICADED (3) (5)		K18 (6) (61)	K18 (6) (61)	K18 (6) (61)	K18 (6)	K18 (6)	K18 (6)	K24	K18 (6)	K18 (6)	K18 (6)	9
10	COMBAT AIRCRAFT PARKINGAREA (65)		K30	K30	K30	K30	K30	K30	K30	K30	K30	K30 (7)(23)(68)	10
11	AIRCRAFT EXPLOSIVES CARGO (32) PARKING AREA		K6 (68)	K6 (68)	K11 (7)(68)	K6 (68)	K11 (7)(68)	K6 (68)	K30	K11 (7)(68)	K6 (68)	K11 (7)(23)(68)	11
12	FLIGHTLINE MUNITIONS HOLDING AREA		K6	K6	K11 (7)	K6	K11 (7)	K6	K24	K11 (7)	K6	K11 (7)	12
13	HARDENED AIRCRAFT SHELTER (12) (37)		K5 (51)	K5 (51)	K8 (51)	K8 (51)	K8 (51)	K8 (51)	K24	K8 (51)	K8 (51)	K18 (51)	13
14	DEFENSIVE MISSILE BATTERY		K6	K6	K11 (7)	K6	K11 (7)	K6	K24	K11 (7)	K6	K11 (7)	14
	COLUMN		1	2	3	4	5	6	7	8	9	10	

	Hazard Class/Division 1.1 (35)					Hazard Class/Division 1.2				HC/D 1.3	HC/D 1.4	
	11	12	13	14	15	16	17	18	19	20	21	
LINE	COMBAT AIRCRAFT PARKING AREA (18)(37) (67)	AIRCRAFT EXPLOSIVE CARGO PARKING AREA (32)	FLIGHT-LINE MUNITIONS HOLDING AREA	HARDENED AIRCRAFT SHELTER (EXCEPT 3RD GENERATION (12) (37)(70)	HARDENED AIRCRAFT SHELTER3RD GENERATION (12) (37)(70)	ALL TYPES OF POTENTIAL EXPLOSION SITES (11) (13)(57)(75)(78) 1.2.1 MCE >100 lbs	1.2.1 MCE <100 lbs	1.2.2	(xx)1.2.3 (74)	ALL TYPES OF POTENTIAL EXPLOSION SITES (13) (21) (31)(55)(76)	ALL TYPES OF POTENTIAL EXPLOSION SITES (13)(19) (20)	LINE
1	K4.5	K4.5	K4.5	K4.5	K4.5	50'	50'	50'	50'		50'	1
	K6	K6	K6	K6	K6	MIN	MIN	MIN	MIN	(58)	MIN	
	K6	K6	K6	K6	K6	(26)	(26)	(26)	(26)		(26)	
	K6	K6	K6	K6	K6							
2	K4.5	K4.5	K4.5	K4.5	K4.5	50'	50'	50'	50'		50'	2
	K6	K6	K6	K6	K6	MIN	MIN	MIN	MIN	(58)	MIN	
	K6	K6	K6	K6	K6	(26)	(26)	(26)	(26)		(26)	
3	K6	K6	K6	K6	K6	50'	50'	50'	50'		50'	3
	K9	K9	K9	K9	K9	MIN (26)	MIN (26)	MIN (26)	MIN	(58)	MIN	
	K11	K11	K11	K11	K11	300' MIN	200' MIN	100' MIN	(26)		(26)	
4	K6	K6	K6	K6	K6	50'	50'	50'	50'		50'	4
	K6	K6	K6	K6	K6	MIN	MIN	MIN	MIN	(58)	MIN	
	K6	K6	K6	K6	K6	(26)	(26)	(26)	(26)		(26)	
5	K11 (7)	K11 (7)	K11 (7)	K11 (8)	K11 (8)	300' MIN (16)(75) (78)	200' MIN (16)(75) (78)	100' MIN (16)(75) (78)	50' MIN (26) (75)(78)	(58) (78)	50' MIN (26)	5
6	K6	K6	K6	K6	K6	300' MIN (16)(75)	200' MIN (16)(75)	100' MIN (16)(75)	50' MIN (26) (75)	(58)	50' MIN (26)	6
7	K6	K6	K6	K6	K6	300' MIN (16)	200' MIN (16)	100' MIN (16)	50' MIN (26)	(58)	50' MIN (26)	7
8	K18	K18 (6)	K18 (6)	K18 300' MIN (6)(40)(41)	IL (62)	T3.8/3.9 IL 300' MIN (77)	T3.8 IL 200' MIN (77)	T3.10 IL 100' MIN	T3.13 .36(IB) 50' MIN (26)	(58)	50' MIN (26)	8
9	K18	K18 (6)	K18 (6)	K18 300' MIN (6)(40)(41)	IL (62)	T3.8/3.9 IL 300' MIN (77)	T3.8 IL 200' MIN (77)	T3.10 IL 100' MIN	T3.13 .36(IB) 50' MIN (26)	(58)	50' MIN (26)	9
10	K18 (7)(22)(23)(68)	K30 (7)(23)(68)	K30 (7)(23)(68)	K30 (8)(23)(68)	K30 (8)(23)(68)	300' MIN (17)(77)	200' MIN (17)(77)	100' MIN (17)	50' MIN (17)	(59) (17)	50' MIN (26)(29) (17)	10
11	K11 (7) (68)	K11 (7) (68)	K11 (7) (68)	K11 (8) (68)	K11 (8) (68)	300' MIN (17)	200' MIN (17)	100' MIN (17)	50' MIN (17)	(58) (17)	50' MIN (26)(29) (17)	11
12	K11 (7)	K11 (7)	K11 (7)	USE TABLE 3.17	USE TABLE 3.17	300' MIN (16)(17)	200' MIN (16)(17)	100' MIN (16)(17)	50' MIN (17)	(58) (17)	50' MIN (26) (17)	12
13	K18 (50)	K18 (50)	SEE PARA 3.20	SEE PARA 3.20	SEE PARA 3.20	300' MIN (16)(17)	200' MIN (16)(17)	100' MIN (16)(17)	50' MIN (17)(26)	(58) (17)	50' MIN (17)	13
14	K11 (7)	K11 (7)	K11 (7)	K11 (8)	K11 (8)	300' MIN (16)	200' MIN (16)	100' MIN (16)	50' MIN	(58)	50' MIN (26)	14
	11	12	13	14	15	16	17	18	19	20	21	

HAZARD CLASS/DIVISION 1.1 (35)													
	COLUMN		1	2	3	4	5	6	7	8	9	10	
LINE	FROM: POTENTIAL EXPLOSIVES SITE (PES) TO: EXPOSED SITE (ES) (72)(76)		EARTH COVERED IGLOO (1)			BARRI-CADED MODULE (38)	ABOVE GROUND MAGAZINE UNBARRI-CADED (2) (3) (5)	ABOVE GROUND MAGAZINE BARRI-CADED (2) (3) (5)	OPERATING LOCATION REMOTELY CONTROLLED (76)	OPERATING LOCATION UNBARRI-CADED (46) (5)	OPERATING LOCATION BARRI-CADED (3) (46) (5)	MISSILE BATTERY DEFENSIVE	LINE
			SIDE (61)	REAR (61)	FRONT (5)(39)								
15	AIRFIELD MILITARY USE ONLY (66)	RUN-WAY	K21/30 750' MIN (30)	K15/30 750' MIN (30)	K21/30 750' MIN (30)	K24/30 750' MIN (30)	K24/30 750' MIN (30)	K24/30 750' MIN (30)	K24/30 750' MIN	K24/30 750' MIN (30)	K24/30 750' MIN (30)	NONE REQUIRED	15
16		*TAXI-*WAY	K18 (30)	K18 (30)	K21/30 750'MIN (30)	K24/30 750'MIN (30)	K24/30 750'MIN (30)	K24/30 750'MIN (30)	K24/30 750'MIN	K24/30 750'MIN (30)	K24/30 750'MIN (30)	NONE REQUIRED	16
17	AIRFIELD, JOINT MILITARY/ NON MILITARY USE (66)	RUN-WAY	K35/50 1250'MIN (47) (52)	K25/50 1250'MIN (47) (52)	K35/50 1250'MIN (47) (52)	K40/50 1250'MIN (47)	K40/50 1250'MIN (47)	K40/50 1250'MIN (47)	K40/50 1250'MIN	K40/50 1250'MIN (47)	K40/50 1250'MIN (47)	K40/50 1250'MIN	17
18		TAXI-WAY	K21/30 750'MIN (48) (53)	K15/30 750'MIN (48) (53)	K21/30 750'MIN (48) (53)	K24/30 750'MIN (48)	K24/30 750'MIN (48)	K24/30 750'MIN (48)	K24/30 750'MIN	K24/30 750'MIN (48)	K24/30 750'MIN (48)	K24/30 750'MIN	18
19	NON-EXPLOSIVES LOADED AIRCRAFT (79)		K35/50 1250'MIN (42)(47) (52)	K25/50 1250'MIN (42)(47) (52)	K35/50 1250'MIN (42)(47) (52)	K40/50 1250'MIN (42)(47)	K40/50 1250'MIN (42)(47)	K40/50 1250'MIN (42)(47)	K40/50 1250'MIN	K40/50 1250'MIN (42) (47)	K40/50 1250'MIN (42) (47)	K30 (43)	19
20	PASSENGER LOAD/ UNLOAD AREA (45)		K21/30 750'MIN (48) (53)	K15/30 750'MIN (48) (53)	K21/30 750'MIN (48) (53)	K24/30 750'MIN (48)	K24/30 750'MIN (48)	K24/30 750'MIN (48)	K24/30 750'MIN	K24/30 750'MIN (48)	K24/30 750'MIN (48)	K30	20
21	FACILITIES FOR COMBAT A/C ALERT FORCES (49)		K18 (61)	K18 (61)	K18 (61)	K18	K18	K18	K24	K18	K18	K18	21
22	ABOVE GROUND UTILITIES (6)(24)		K21/30 750'MIN (48) (53)	K15/30 750'MIN (48) (53)	K21/30 750'MIN (48) (53)	K24/30 750'MIN (48)	K24/30 750'MIN (48)	K24/30 750'MIN (48)	K24/30 750'MIN	K24/30 750'MIN (48)	K24/30 750'MIN (48)	K24/30 750'MIN	22
23	UNDERGROUND UTILITIES & BULK POL FACILITIES (24)(44)		K3 80' MIN	K3 80' MIN	K3 80' MIN	K3 80' MIN	K3 80' MIN	K3 80' MIN	K3 80' MIN	K3 80' MIN	K3 80' MIN	K3 80' MIN	23
24	ABOVE GROUND BULK POL FACILITIES (44)		K35/50 1250'MIN (47) (54)	K25/50 1250'MIN (47) (54)	K35/50 1250'MIN (47) (54)	K40/50 1250'MIN (47)	K40/50 1250'MIN (47)	K40/50 1250'MIN (47)	K40/50 1250'MIN	K40/50 1250'MIN (47)	K40/50 1250'MIN (47)	K40/50 1250'MIN	24
25	PUBLIC TRAFFIC ROUTE (9)		K21/30 750'MIN (48) (53)	K15/30 750'MIN (48) (53)	K21/30 750'MIN (48) (53)	K24/30 750'MIN (48)	K24/30 750'MIN (48)	K24/30 750'MIN (48)	K24/30 750'MIN	K24/30 750'MIN (48)	K24/30 750'MIN (48)	K24/30 750'MIN	25
26	RECREATION AREA/ FACILITY (34)		K21/30 750'MIN (48) (53)	K15/30 750'MIN (48) (53)	K21/30 750'MIN (48) (53)	K24/30 750'MIN (48)	K24/30 750'MIN (48)	K24/30 750'MIN (48)	K24/30 750'MIN	K24/30 750'MIN (48)	K24/30 750'MIN (48)	K24/30 750'MIN	26
27	RELATED FACILITY (36)		K18 (6)(41) (61)	K18 (6)(41) (61)	K18 (6)(41) (61)	K18 (6) (41)	K18 (6) (41)	K18 (6) (41)	K24	K18 (6) (41)	K18 (6) (41)	K18 (6) (41)	27
28	INHABITED BUILDING (60) (33)		K35/50 1250'MIN (47) (52)	K25/50 1250'MIN (47) (52)	K35/50 1250'MIN (47) (52)	K40/50 1250'MIN (47)	K40/50 1250'MIN (47)	K40/50 1250'MIN (47)	K40/50 1250'MIN	K40/50 1250'MIN (47)	K40/50 1250'MIN (47)	K40/50 1250'MIN	28
	COLUMN		1	2	3	4	5	6	7	8	9	10	

	Hazard Class/Division 1.1 (35)					Hazard Class/Division 1.2				HC/D 1.3	HC/D 1.4	
	11	12	13	14	15	16	17	18	19	20	21	
LINE	COMBAT AIRCRAFT PARKING AREA (18)(37) (67)	AIRCRAFT EXPLOSIVE CARGO PARKING AREA (32)	FLIGHT-LINE MUNITIONS HOLDING AREA (30)	HARDENED AIRCRAFT SHELTER (EXCEPT 3RD GENERATION (12)(13) (37)(70)	HARDENED AIRCRAFT SHELTER 3RD GENERATION (12)(13) (37)(70)	ALL TYPES OF POTENTIAL EXPLOSION SITES (11)(13)(57)(75)(78) 1.2.1 MCE >100 lbs	1.2.1 MCE <100 lbs	1.2.2	(xx)1.2.3 (74)	ALL TYPES OF POTENTIAL EXPLOSION SITES (13) (21) (31)(55)(76)	ALL TYPES OF POTENTIAL EXPLOSION SITES (13)(19) (20)	LINE
15	NONE REQUIRED (56)	NONE REQUIRED (56)	NONE REQUIRED (56)	NONE REQUIRED (56)	NONE REQUIRED (56)	T3.8/3.9 PTR 300' MIN (17)(30) (77)	T3.8 PTR 200' MIN (17)(30)(77)	T3.10 PTR 100' MIN (17)(30)	T3.13 .6(IB) (17)(30)	17)(30) (59)	100' MIN (17)(15)	15
16	NONE REQUIRED (56)	NONE REQUIRED (56)	NONE REQUIRED (56)	NONE REQUIRED (56)	NONE REQUIRED (12)(56)	T3.8/3.9 PTR 300' MIN (17)(27) (30)(77)	T3.8 PTR 200' MIN (17) (27)(30)(77)	T3.10 PTR 100' MIN (17)(27)(30)	T3.13 .6(IB) (17)(27)(30)	(17)(30) (59)	100' MIN (17)(15)	16
17	K40/50 1250'MIN (47)	K40/50 1250'MIN (47)	K40/50 1250'MIN (47)	K40 REAR K62 SIDE K50 FRONT (40)	IB (62)	T3.8/3.9 IB 300' MIN (77)	T3.8/ IB 200' MIN (77)	T3.10 IB 100' MIN	T3.13 IB (xx) MIN	(59)	100' MIN (15)	17
18	K24/30 750'MIN (48)	K24/30 750'MIN (48)	K24/30 750'MIN (48)	K24/30 REAR K37 SIDE K30 FRT (40)	PTR (62)	T3.8/3.9 PTR 300' MIN (77)	T3.8 PTR 200' MIN (77)	T3.10 PTR 100' MIN	T3.13 .6(IB)	(59)	100' MIN (15)	18
19	K40/50 1250'MIN (43)(47)	K40/50 1250'MIN (43)(47)	K40/50 1250'MIN (43)(47)	K40 REAR K62 SIDE K50 FRONT (40)	IB (62)	T3.8/3.9 IB 300' MIN (43)(77)	T3.8 IB 200' MIN (43)(77)	T3.10 IB 100' MIN (43)	T3.13 IB (xx) MIN (43)	(43) (59)	100' MIN (15)(43)	19
20	K24/30 750'MIN (48)	K24/30 750'MIN (48)	K24/30 750'MIN (48)	K24/30 REAR K37 SIDE K30 FRT (40)	PTR (62)	T3.8/3.9 PTR 300' MIN (77)	T3.8 PTR 200' MIN (77)	T3.10 PTR 100' MIN	T3.13 .6(IB)	(59)	100' MIN (15)	20
21	K18 (6)	K18 (6)	K18 (6)	K18 300' MIN (6)(40)(41)	IL (62)	T3.8/3.9 IL (77) 300' MIN	T3.8 IL (77) 200' MIN	T3.10 IL 100' MIN	T3.13 .36(IB) 50' MIN (26)	(58)	50' MIN (26)	21
22	K24/30 750'MIN (48)	K24/30 750'MIN (48)	K24/30 750'MIN (48)	K24/30 REAR K37 SIDE K30 FRT (40)	PTR (62)	T3.8/3.9 PTR 300' MIN (77)	T3.8 PTR 200' MIN (77)	T3.10 PTR 100' MIN	T3.13 .6(IB)	(59)	50' MIN	22
23	K3 80' MIN	K3 80' MIN	K3 80' MIN	K3 80' MIN	K3 80' MIN	80' MIN (69)	80' MIN (69)	80' MIN (69)	80' MIN (69)	80' MIN (69)	50' MIN (69)	23
24	K40/50 1250'MIN (47)	K40/50 1250'MIN (47)	K40/50 1250'MIN (47)	K40 REAR K62 SIDE K50 FRONT (40)	IB (62)	T3.8/3.9 IB 300' MIN (77)	T3.8 IB 200' MIN (77)	T3.10 IB 100' MIN	T3.13 IB (xx) MIN	100' MIN (29)(59)	100' MIN (15)(28)	24
25	K24/30 750'MIN (48)	K24/30 750'MIN (48)	K24/30 750'MIN (48)	K24/30 REAR K37 SIDE K30 FRT (40)	PTR (62)	T3.8/3.9 PTR 300' MIN (77)	T3.8 PTR 200' MIN (77)	T3.10 PTR 100' MIN	T3.13 .6(IB)	(59)	100' MIN (15)	25
26	K24/30 750'MIN (48)	K24/30 750'MIN (48)	K24/30 750'MIN (48)	K24/30 REAR K37 SIDE K30 FRT (40)	PTR at (62)	T3.8/3.9 PTR 300' MIN (77)	T3.8 PTR 200' MIN (77)	T3.10 PTR 100' MIN	T3.13 .6(IB)	(59)	100' MIN (15)	26
27	K18 (6)(41)	K18 (6)(41)	K18 (6)(41)	K18 300' MIN (6)(40)(41)	IL (62)	T3.8/3.9 IL 300' MIN (77)	T3.8 IL 200' MIN (77)	T3.10 IL 100' MIN	T3.13 .36(IB) 50' MIN (26)	(58)	50 MIN (26)	27
28	K40/50 1250'MIN (47)	K40/50 1250'MIN (47)	K40/50 1250'MIN (47)	K40 REAR K62 SIDE K50 FRONT (40)	IB (62)	T3.8/3.9 IB 300' MIN (77)	T3.8 IB 200' MIN (77)	T3.10 IB 100' MIN	T3.13 IB (xx) MIN	(59)	100' MIN (15)	28
	11	12	13	14	15	16	17	18	19	20	21	

NOTES:

1. To use this criteria, earth-covered igloos constructed/sited prior to February 1999 must meet the requirements of paragraph **3.2.** and the definition of "earth-covered magazine" in **Attachment 1**. Non-standard constructed/sited prior to February 1999 for explosives weights not exceeding 250,000 pounds remain valid (see paragraph **1.2.3.**). Future sitings must reflect the appropriate criteria.

2. Includes open air munitions stocks, light structures (for example, some Butler buildings), and trucks, trailers or railcars loaded with explosives. See paragraph **3.16.1.** for vehicle inspection point criteria. Also includes modules, see paragraphs **3.22.** through **3.24.**

3. Barricades must meet the requirements of paragraph **3.12.** For igloos the barricades in front of these structures will count for Q-D purposes only when the facility is being looked at as an ES; for these facilities, no credit is given for a front barricaded PES.

4. K1.1 is the minimum separation permitted between stacks of explosives in adjacent barricaded cells within a module and between adjacent barricaded modules. Cells containing structures heavier than metal Butler-type buildings require K6 barricaded and K11 unbarricaded to all other cells containing HC/D 1.1 explosives.

5. For barricading consideration see paragraph **3.12.8.** magazines as Barricaded Structures.

6. Continue to use K9 to properly barricaded facilities sited at K9 before 1 June 1980 until a revised siting of that facility is necessary, except as noted below. K18 separations, or reduced intraline distances from earth-covered igloos in **Table 3.7.** are required for new or revised sitings. Barricades should continue to be used in designing new facilities to limit fragment damage. Continue to use K9 for the following properly barricaded facilities.
   a. Hardened response force tactical facilities (RFTF). No barricade is required to use K9 for RFTFs.
   b. Facilities of a tactical missile site (from the missiles of the Tactical Missile Site to its manned facilities; also applies to Defensive Missile Batteries).
   c. Field operations in magazine areas when performing minor maintenance, packaging or surveillance inspections from adjacent magazines.
   d. Unoccupied auxiliary power facilities, transformer stations, water treatment and pollution abatement facilities and other utilities that serve the PES and are not an integral function in the PES. Loss must not create an immediate secondary hazard. These applications need not be barricaded. *Exceptions*: Unoccupied power plants or transformers that exclusively support an explosives area or facility may be separated according NFPA standards. Transformers that directly support a single PES requires no separation.

7. Use K6 if a barricade meeting the requirements of paragraph **3.12.1.** is between the PES and the ES.

8. Use K11 where no revetment wall or barricade protects the ES from the PES. Use K6 where a revetment wall or barricade protects the ES from the PES. No credit is allowed for a shelter wall on a PES.

9. See paragraph **3.2.** for additional exposures requiring PTR separation.

10. MILVAN/ISO container stuffing and unstuffing in a magazine area or munitions storage area are permitted at intermagazine distances.

11. Items in this division present a risk of propagation to adjacent aboveground magazines, particularly when packed in combustible containers. Distances shown are not to be reduced by the presence of barricades or earth cover. Storage in earth-covered igloos is preferred.

12. Separations are based on shelter doors remaining closed, except for aircraft towing, fueling, servicing, run up, or taxi and during integrated combat turnarounds or short periods when maintenance equipment or munitions are being moved into or out of shelters. If doors are left open for extended periods, normal combat aircraft parking area criteria apply out the front.

    (PACAF) Wing Weapons Safety offices will identify what actions constitute servicing in their supplement to this manual or other local operating instruction.

13. A HAS sited for HC/D 1.2.x (MCE <100 lbs for HC/D 1.2.1), 1.3 or 1.4 explosives doesn't generate a Q-D clear zone except out the front. See FN 15 for additional HC/D 1.4 guidance. For HC/D 1.2.1 (MCE≥100), such as HC/D 1.2 CBUs, Durandals, AGM 88s, and some 2.75" WP rockets, see **Table 3.3.**, Col 16.

14. When required in austere areas (paragraph **3.21.**), reduce K1.25 to K1.1; reduce K2.75 to K2.5 when limiting igloo contents to those items listed in paragraph **3.23.2.**

15. HC/D 1.4S items may be stored (including associated handling) without regard to Q-D criteria. IBD and PTR will be 75 feet instead of 100 feet for quantities of HC/D 1.4 (other than compatibility group S) for quantities ≤3000 pounds. IBD and PTR will remain at 100 feet for quantities >3000 pounds. Fire separation distance of 50 feet is required out the sides and rear of earth-covered igloos (except to other igloo side/rear relationships). Out the front of earth-covered igloos 75 feet or 100 feet, as applicable, will be required. All other magazines will apply 75 feet or 100 feet IBD/PTR clear zones as applicable.

16. See paragraph **3.24.** for reduced separations for austere area storage of non mass-detonating CBUs and 20 and 30 mm ammunition.

17. If PES is a combat aircraft parking area, flightline munitions holding area, HAS, or explosives loaded cargo aircraft parking area, no separation is necessary unless the MAJCOM has determined Q-D application is necessary for aircraft survivability. If PES is a non-flightline PES such as a MSA, then use PTR (exception: from MSA PES to an explosives-loaded cargo aircraft parking area ES, use IMD), unless the MAJCOM has determined Q-D application is necessary for aircraft survivability. If aircraft survivability is the objective from any PES, use 1.2x IBD. See **Table 3.8.**, **Table 3.9.**, **Table 3.10.**, and **Table 3.13.** for 1.2.x PTR/IBD as applicable. For aircraft parked inside of a HAS hazarded by 1.2x PES, also use IBD but only consider line-of-sight frontal exposure. A HAS with door normally kept closed and acting as an ES is considered adequate for aircraft survivability. If the MAJCOM chooses not to apply any Q-D separation, they (or wing representative) must inform the commander owning the assets (exposed sites) of the fragmentation hazards of the applicable 1.2x PESs. If PES is a defensive missile battery use IM separation. See paragraphs **3.25.4.** and **3.25.5.** for HC/D 1.3 and 1.4 guidance.

(PACAF) The installation commander or equivalent will determine application of HC/D 1.2.X criteria for aircraft survivability. Wing Weapons Safety Managers must inform the commander owning the assets (exposed sites) of the fragmentation hazards of the applicable 1.2.X PES if survivability criteria is not used. Document in the ESP transmittal letter and Section III of the AF Form 943, with commander's signature.

18. Aircraft undergoing end-of-runway arming or dearming are considered in the transportation mode and are exempt from Q-D.

19. Greater than 3,000 pounds of HC/D 1.4 may be sited at 50 feet (100 feet if the ES is of combustible construction) from all other magazines or explosives operating locations regardless of the HC/D or quantity of explosives authorized in the adjacent structures. The responsible commander must accept the fact that an explosion in adjacent structures could result in loss of the HC/D 1.4 stocks and the storage structure. The commander's risk acceptance must be documented by letter (i.e., signed by the commander stating he/she understands and accepts the potential loss of HC/D 1.4 stocks and the storage structure) and this letter must be submitted as part of the explosives site plan request package. Earth-covered structures may be filled to physical capacity with HC/D 1.4 explosives without requirement for separation to other facilities. See FN 15 for additional guidance.

20. When required for operational necessity, store limited quantities of HC/D 1.4 items without regard for Q-D. See paragraph **2.35.** for licensing requirements.

21. For reasons of operational necessity, 100-pounds NEWQD or less of HC/D 1.3 items may be stored at a licensed location without regard for Q-D. See paragraph **2.35.** for licensing requirements.

22. When parking explosives-loaded combat aircraft at less than intermagazine distance between aircraft within a group, obtain approval from at least the Numbered Air Force (NAF) Vice Commander owning the exposed aircraft (except for ARMCO revetted cells containing two aircraft). If grouping is required for support of a Unified Commander, the Major Air Component Vice Commander having operational control of the aircraft will be the lowest approval. Use K18 between groups. Intervening barricades, although recommended, don't reduce the required separation between groups. With NAF approval, K11 between groups may be used for contingency operations. See paragraph **3.25.** for additional parking criteria. For approved aircraft configurations in a CAPA, see **Figure 3.7.** and **Figure 3.8.** and paragraph **3.35.**

    (PACAF) 7 AF/CC has accepted the use of reduced combat aircraft parking criteria at Cheong Ju, Kunsan, Kwang Ju, Osan, Suwon, and Taegu Air Bases (see **Attachment 15 (Added)**).

23. K30 is required to provide aircraft survivability from blast overpressure. This distance may be reduced to K11 if commanders responsible for the aircraft are advised of and accept the additional risk if aircraft are parked at less than K30.

    (PACAF) 7 AF/CC has accepted the risks of parking combat aircraft at less than K30 at Cheong Ju, Kunsan, Kwang Ju, Osan, Suwon, and Taegu Air Bases (see **Attachment 15 (Added)**).

24. See definition of "Utilities" in **Attachment 1**. If the exposure does not meet the definition of utility, identify the exposure as a service line (see paragraph **2.48.**). Paragraph **3.13.** contains additional guidance on separations required for specific utilities. Refer to paragraph **3.19.** for additional Q-D guidance on electrical utilities. Use paragraph **2.23.** for storage of water for fire fighting. Locate all unprotected water towers and above ground water tanks, whose loss is unacceptable, a minimum of inhabited building distance (IBD) from explosives locations. If loss of the water tower is acceptable, no Q-D is required. Locate tanks and reservoirs below ground level at underground POL separations. Manned or critical environmental exposures such as, operable units, monitoring and test wells that must be located in an explosive clear zone must be separated from a PES by incremental PTR. Other unmanned or non-critical environmental exposures require no separation. Underground electrical and communications lines may be sited at incremental K3 with no minimum required.

25. Reserved for future use.

26. A 75 or 100 foot separation distance, as applicable, must be used to an ES of combustible construction. Wood frame structures are an example of combustible construction. Concrete, masonry, and metal structures are examples of non-combustible construction.

27. No Q-D separation is necessary between an explosives-loaded aircraft parking area and the taxiways exclusively serving or constructed as part of the area.

28. At least 50 feet from combat aircraft parking areas and aircraft explosives cargo parking areas for quantities >3000 pounds (excluding HC/D 1.4S items). Use 75' for ≤3000 pounds or 100' for >3000 pounds for all other PESs (excluding HC/D 1.4S items).

29. The 75 or 100-foot separation distance, as applicable, does not apply to combat aircraft parking areas and aircraft explosives cargo parking areas. All other requirements apply.

30. When required at overseas locations only, use K4.5 (750 min doesn't apply) for HC/D 1.1 PES's and 125 feet for non-mass-detonating PESs. In NATO, use the equation: D=1.8Q1/3, where D is the distance in meters and Q equals the NEWQD in kilograms. The use of these reduced separations depends on operational necessity, providing the commander accepts the transient risk to military aircraft movements. If siting facilities, the MAJCOM/CC or CV must provide HQ AFSC/SE a letter listing all bases at which these distances will apply and state acceptance of transient risk to military aircraft movements.

    (PACAF) PACAF/CV has accepted the use of reduced separations, when operationally necessary, at Osan, Kunsan, Kwang Ju, Suwon, Taegu, Cheong Ju, Kadena, Misawa, & Yokota Air Bases (see **Attachment 12 (Added)**).

31. For intentional static firing for shelf life testing or similar operations see paragraph **3.27.3.**

32. No Q-D separation is necessary from explosives-loaded cargo aircraft when parked 24 hours or less for refueling, servicing, crew rest or change, or maintenance performed under TO 11A-1-33, Handling and Maintenance of Explosives Loaded Aircraft, (applies with all HC/Ds). Keep the aircraft under constant surveillance and do not load, unload, or handle explosives. Park these aircraft on the hot cargo pad. When this is not possible, park as remotely as practical from other explosives or populated areas. Comply with minimum airfield criteria in AFH 32-1084.

33. See paragraph **3.2.1.** for additional exposures requiring IBD separation.

34. Use the listed distances for recreational areas in the open, such as golf courses or tennis courts without structures. Use inhabited building separation where structures, including bleachers, are part of the facility (such as indoor tennis courts or golf clubhouses). No separation is necessary to recreational areas used exclusively by personnel supporting the PES, however, use IL separation from other related PESs.

35. For class division 1.5 items, use C/D 1.1 criteria.

36. See paragraph **3.13.** for additional information and specific requirements. For non-explosive War Reserve Materiel (WRM) see paragraph **3.17.** and **3.18.** For hardened facility criteria see paragraph **3.11.6.**

37. See paragraph **3.20.** for additional information and specific requirements. Use combat aircraft parking area criteria for steel bin revetments and the unhardened front or rear of Korean TAB VEE or Flowthru shelters. See **Table 3.16.** For HC/Ds 1.2, 1.3, and 1.4, use intermagazine separation to protect HAS and maintenance HAS from unrelated PES (such as operating locations, igloos, and above ground magazines). See footnote 17 if aircraft survivability is required.

38. Separations shown apply to side, rear, and barricaded front exposures. For exposures to or from the unbarricaded front of a module, use unbarricaded aboveground magazine criteria. K1.1 is the minimum separation authorized between stacks of munitions in adjacent cells and modules. See paragraphs **3.22.** and **3.23.** for additional guidance concerning modules.

39. Consider the front of an igloo unbarricaded within 60 degrees from either side of the door centerline unless a barricade meeting the requirements of paragraph **3.12.** protects the igloo.

40. Applies to all class/division 1.1 munitions except AIM-7, AIM-9, and AGM-65 missiles. See paragraph 3.20.5.3. for separation distances for these items. Only 50-foot separation is necessary from the sides or rear of the HAS (other than 3rd Generation) for 500 pounds NEW or less.

41. Use the minimum IL distance for specific items and situations in paragraph **3.39.** (**Table 3.26.**).

42. Criteria shown apply to nonmilitary aircraft. Use incremental K30 to military non-explosives loaded aircraft.
MAJCOMs may require greater protection for unique mission or high value airframes.

43. Q-D separations to non-explosives military aircraft parking areas from combat aircraft parking areas, flightline munitions holding areas, and explosives cargo aircraft parking areas are a MAJCOM responsibility. Refer to paragraph **3.13.3.1.** for collocating combat operations.

    (PACAF) Use K30 for aircraft parked in these types of areas. Use the appropriate Inhabited Building Distance (IBD) separation for HC/D 1.2; Table 3.13, IB or PTR column for HC/D 1.3; and 100-foot minimum for HC/D 1.4.

44. Consider cut and cover POL tanks as underground. Site berm fuel bladders at incremental K40/50 distance with a minimum 400 feet from the PES supported. Q-D from igloos is K35/50 for fronts and sides and K25/50 for rears. (Fuel bladders must be fueled from trucks, underground lines or aboveground lines that have automatic shutoffs.) These standards apply only to bulk POL and the supply lines supporting the storage location. All other fuel systems will be constructed according to NFPA and national consensus standards.

45. Applies to open locations where passengers enplane or deplane. For structures where passengers assemble, such as terminal buildings, use IB distance.

46. See paragraph **3.14.** for specific criteria for rocket storage, checkout and assembly buildings.

47. Use the minimum IB distance for specific items and situations (paragraphs **3.32.** through **3.39.**) or authorized under paragraph **3.11.** in place of the 1,250-foot minimum distance.

48. Use the minimum PTR distance for specific items and situations (paragraphs **3.32.** through **3.39.**) or authorized under paragraph **3.11.** in place of the 750-foot minimum distance.

49. Alert force facilities which house alert crews and essential support personnel for alert aircraft, may be sited at less than K18 if equivalent protection is provided by substantial dividing walls and blast doors. Use greater separation where response time will permit. See Note 76 if the PES hazarding the alert facility is for remotely controlled operations.

50. Use K2.75 to protect against simultaneous detonation. Use K6 barricaded and K9 unbarricaded to the front of a TAB VEE or TAB VEE Modified. Use K8 to maintenance HAS or for aircraft and shelter survival. However, survival criteria to the front of a TAB VEE or modified TAB VEE is K18.

    (PACAF) Use K11 from an unbarricaded or barricaded Combat Aircraft Parking Area (CAPA) to the front of a Korean TAB VEE.

51. All munitions storage area PESs to TAB VEE fronts will apply K 18 if serviceability status of the doors allows them to be closed when aircraft are inside. Otherwise, apply K30 criteria to TAB VEE fronts.

52. K-factors shown apply to 26- by 60-feet or larger igloos. For smaller igloos, use K40/50.

53. K-factors shown apply to 26- by 60-feet or larger igloos. For smaller igloos, use K24/30.

54. K-factors shown apply to 26- by 60-feet or larger igloos. For smaller igloos, use K40/50.

55. When necessary, fill earth-covered igloos to their physical capacity for HC/D 1.3, provided the igloos are properly sited for at least 100 pounds of HC/D 1.1 material.

56. No explosives safety separation required. Apply airfield safety criteria (see paragraph **3.25.**).

57. For front exposures from all earth covered igloos acting as a PES, use **Table 3.3.** columns 16, 17, 18, or 19. For side and rear exposures from all earth covered igloos acting as a PES, use **Table 3.12.**

58. Use **Table 3.13.**, IM and IL column.

59. Use **Table 3.13.**, PTR and IB column.

60. For sparsely populated locations, reduce the minimum 1,250-foot fragment distance to 900 feet [270 meters (m)] if the PES does not exceed 11,400 pounds (5,140 kg). Allow no more than 25 persons in any sector bounded by the sides of a 45 degree angle, with the vertex at the PES, and the 900 feet (270 m) and 1,250 feet (380 m) arcs from the PES. See **Figure 3.1.**

61. When required, reduce specific distances for certain exposures. Testing proved there is attenuation of the airblast overpressures from the sides and rear of earth-covered igloos compared to an unconfined surface burst. Some slight overpressure increase occurs at the front. Compute intraline distances from earth-covered igloos from **Table 3.4.** Interpolation formulas in the notes for **Table 3.6.** may be used for explosives weights not listed in these tables. The barricaded columns of **Table 3.4.** can only be used for ES authorized K-9 separation in note 6. The provisions of this note do not apply when the ES is a military only taxiway or runway.

62. Use the following table to determine Q-D from a US third-generation hardened aircraft shelter PES to an unhardened ES (see note 12 above). Munitions should be separated from the hardened aircraft shelter walls at a distance sufficient to eliminate local breaching. For less than 1,100 pounds, a 3-foot separation distance from the wall is sufficient. For IM distances see paragraph **3.20.**

    (PACAF) See paragraph **3.20.4.** for HASs used solely as permanent maintenance facilities.

63. Use this K factor for NEW in PES up to 250,000 pounds.

64. Use this K factor for NEW in PES above 250,000 pounds.

65. The K factor indicated will provide protection from blast overpressure. Barricades are required if protection from low angle, high velocity fragments is desired.

66. Use Runway, Airfield Military Use Only, criteria for end-of-runway and de-arm crew shelters (see paragraph **3.13.4.**).

    (PACAF) Treat runway arresting systems with the same criteria as the runway they support (Ref: **Table 3.3.**, lines 15-18). Weather instruments require IL from flightline PESs and Incremental IB from non-flightline PESs.

67. Intraline is the minimum distance between separate groups of explosives loaded combat configured aircraft or between aircraft and a pre-load or site that serves to support aircraft. Integrated Combat Turn (ICT) operations using either live or inert munitions are considered a Combat Aircraft Parking Area and must be sited according to procedures in **Chapter 4**, **Section 4A**. All aircraft undergoing hot-pit refueling are considered to be in transportation mode and are exempt from Q-D requirements as a PES.

68. The K factor indicated will provide IM protection only. K30 is required if blast overpressure protection is desired.

69. An 80-foot minimum distance is advisory, but not mandatory.

70. All hazard class/division (HC/D) 1.1 material, regardless of specific known fragment distances, will drive HAS inhabited building (IB) clear zones based on the specific HAS Q-D criteria and the maximum credible event (MCE) for the shelter. For example, 2,500 pounds of HC/D (14)1.1 material in a 3rd Generation HAS would require K62 (841 feet) from the sides, K50 (679 feet) from the front, and K40 (543 feet) from the rear. This guidance is predicated on the mass detonating characteristics of HC/D 1.1 material and the demonstrated effects of a HC/D 1.1 event in a HAS.

71. Reserved for future use.

72. If a specific facility is not listed in **Table 3.3.**, see **Section 3C**--*Q-D Criteria For Specific Facilities or Situations,* for the applicable criteria.

73. Reserved for future use.

74. For open/light PES locations: HC/D 1.2.3 IMD from a PES containing HD 1.2.3 items to an ES containing other than HC/D 1.2.3 is K11 (50' min) based on the NEWQD of a single round of the largest (greatest NEWQD) HC/D 1.2.3 item in the PES. For an ES containing only HC/D 1.2.3 items, the IMD from any PES to such an ES is 50 feet. For heavy structures: 50 feet is the required IMD to PES exposures. See **Table 3.12.** for igloo-to-igloo side/rear orientations. A heavy structure is defined as a structure with a wall thickness ≥12 inches of reinforced concrete (18.7 inches brick); a roof thickness ≥5.9 inches of reinforced concrete and a barricade between the door and any PES, constructed for protection against high-speed, low-angle fragments (i.e., an earth-covered magazine with a barricaded front). See **Table 3.13.**, Note 7 for IL/PTR/IB guidance.

75. If the ES is a hardened aboveground, non earth-covered structure, apply only a 50-foot minimum for all quantities of HC/D 1.2. A hardened structure for this purpose is a building with wall thickness ≥12 inches of reinforced concrete (18.7 inches brick); a roof thickness >5.9 inches of reinforced concrete and a barricade between the door and any PES, constructed for protection against high-speed, low-angle fragments according to paragraph **3.12.1.**

76. Remotely controlled operations must be terminated when operating personnel must perform duties at less than PTR from a remotely controlled operation, or when fragmentation protection and PTR separation is no longer provided. This should be documented in local procedures. See paragraph **2.82.** for personnel protection guidance.

77. When stored in structures that may contribute to the debris hazard, the IB, PTR, and IL for items whose MCE is greater than 31 pounds is determined by using the larger of the following two distances: those given in **Table 3.8.** for the appropriate explosive weight or those given in **Table 3.9.** for the appropriate MCE. Explosives in any building are assumed to create building debris unless an engineering analysis shows fragments will not go beyond a lesser distance.

78. See paragraph **2.41.**, *Multicube or Segregated Magazines,* for special considerations when storing limited amounts of explosives.

79. Consider parked aeroclub aircraft as non-military aircraft for Q-D purposes.

Table 3.4. Factors for Computing IL from Igloos.

Exposure	NEW Range (lbs.)	K-FACTOR Barricaded	K-FACTOR Unbarricaded
Front	1 - 300K	10	18
	300K - 500K	9-10	18
Side	1 - 300K	7	16
	300K - 400K	7-9	16-18
	Over 400K	9	18
Rear	1 - 100K	6	12
	100K - 300K	6	12-14
	300K - 400K	6-9	14-18
	Over 400	9	18

Table 3.5. Quantity-Distance for 3rd Generation HAS to Unhardened ES.

NEW (Pounds)	FRONT (IB/PTR/IL)	SIDE (IB/PTR/IL)	REAR (IB/PTR/IL)
0 - 5	50’	50’	50’
6 - 500	230’	50’	50’
501 - 1100	230’	395’	165’
1101-11000	IB=K50 PTR=K26 Min 300’ IL=K18 Min 300’	IB=K62 PTR=K32 Min 395’ IL=K22 Min 395’	IB=K40 PTR=K20 Min 300’ IL=K14 Min 300’

Figure 3.1. Reduction for Sparsely Populated Locations.

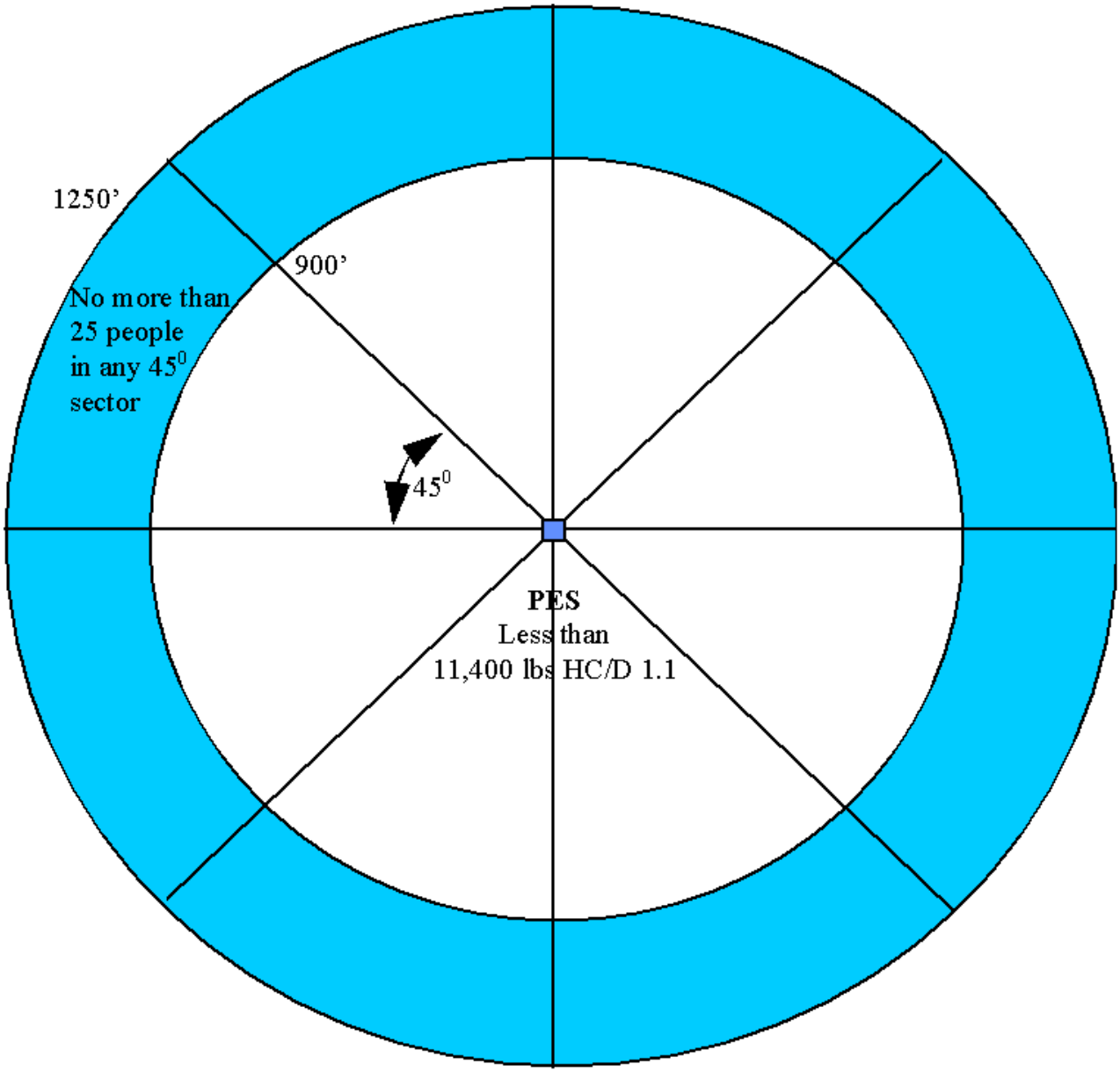

(See **Table 3.3.**, Note 60)

Table 3.6. Quantity-Distance Separation Distance.

NET EXPLOSIVE WEIGHT (POUNDS)			DISTANCE FROM POTENTIAL EXPLOSION SITE TO EXPOSED SITE (FOR GIVEN K-FACTOR) (FEET)														
OVER	NOT OVER-	CUBE ROOT OF UPPER LIMIT	**K1.1**	**K1.25**	**K2**	**K2.5**	**K2.75**	**K3**	**K4**	**K4.5**	**K5**	**K6**	**K7**	**K8**	**K9**	**K11**	**K18**
			IM	IM	IM	IM	IM	POL	IM	IM	HAS	IM		HAS	IL	IM	IL
0	1	1.00	2	2	2	3	3	3	4	5	5	6	7	8	9	11	18
1	2	1.26	2	2	3	4	4	4	6	6	7	8	9	11	12	14	23
2	5	1.71	2	3	4	5	5	6	7	8	9	11	12	14	16	19	31
5	10	2.15	3	3	5	6	6	7	9	10	11	13	16	18	20	24	39
10	20	2.71	3	4	6	7	8	9	11	13	14	17	20	22	25	30	49
20	30	3.11	4	4	7	8	9	10	13	14	16	19	22	25	28	35	56
30	40	3.42	4	5	7	9	10	11	14	16	18	21	24	28	31	38	62
40	50	3.68	5	5	8	10	11	12	15	17	19	23	26	30	34	41	67
50	100	4.64	6	6	10	12	13	14	19	21	24	28	33	38	42	52	84
100	200	5.85	7	8	12	15	17	18	24	27	30	36	41	47	53	65	106
200	300	6.69	8	9	14	17	19	21	27	31	34	41	47	54	61	74	121
300	400	7.37	9	10	15	19	21	23	30	34	37	45	52	59	67	82	133
400	500	7.94	9	10	16	20	22	24	32	36	40	48	56	64	72	88	143
500	600	8.43	10	11	17	22	24	26	34	38	43	51	60	68	76	93	152
600	700	8.88	10	12	18	23	25	27	36	40	45	54	63	72	80	98	160
700	800	9.28	11	12	19	24	26	28	38	42	47	56	65	75	84	103	168
800	900	9.65	11	13	20	25	27	29	39	44	49	58	68	78	87	107	174
900	1,000	10.00	11	13	20	25	28	30	40	45	50	60	70	80	90	110	180
1,000	1,500	11.45	13	15	23	29	32	35	46	52	58	69	81	92	104	126	207
1,500	2,000	12.60	14	16	26	32	35	38	51	57	63	76	89	101	114	139	227
2,000	3,000	14.42	16	19	29	37	40	44	58	65	73	87	101	116	130	159	260
3,000	4,000	15.87	18	20	32	40	44	48	64	72	80	96	112	127	143	175	286
4,000	5,000	17.10	19	22	35	43	48	52	69	77	86	103	120	137	154	189	308
5,000	6,000	18.17	20	23	37	46	50	55	73	82	91	110	128	146	164	200	328
6,000	7,000	19.13	22	24	39	48	53	58	77	87	96	115	134	154	173	211	345
7,000	8,000	20.00	22	25	40	50	55	60	80	90	100	120	140	160	180	220	360
8,000	9,000	20.80	23	27	42	53	58	63	84	94	105	125	146	167	188	229	375
9,000	10,000	21.54	24	27	44	54	60	65	87	97	108	130	151	173	194	237	388
10,000	15,000	24.66	28	31	50	62	68	74	99	111	124	148	173	198	222	272	444
15,000	20,000	27.14	30	34	55	68	75	82	109	123	136	163	191	218	245	299	489
20,000	25,000	29.24	33	37	59	74	81	88	117	132	147	176	205	234	264	322	527
25,000	30,000	31.07	35	39	63	78	86	94	125	140	156	187	218	249	280	342	560
30,000	35,000	32.71	36	41	66	82	90	99	131	148	164	197	229	262	295	360	589
35,000	40,000	34.20	38	43	69	86	95	103	137	154	171	206	240	274	308	377	616
40,000	45,000	35.57	40	45	72	89	98	107	143	161	178	214	249	285	321	392	641
45,000	50,000	36.84	41	47	74	93	102	111	148	166	185	222	258	295	332	406	664
50,000	55,000	38.03	42	48	77	96	105	115	153	172	191	229	267	305	343	419	685
55,000	60,000	39.15	44	49	79	98	108	118	157	177	196	235	275	314	353	431	705
60,000	65,000	40.21	45	51	81	101	111	121	161	181	202	242	282	322	362	443	724
65,000	70,000	41.21	46	52	83	104	114	124	165	186	207	248	289	330	371	454	742
70,000	75,000	42.17	47	53	85	106	116	127	169	190	211	254	296	338	380	464	760
75,000	80,000	43.09	48	54	87	108	119	130	173	194	216	259	302	345	388	474	776
80,000	85,000	43.97	49	55	88	110	121	132	176	198	220	264	308	352	396	484	792
85,000	90,000	44.81	50	57	90	113	124	135	180	202	225	269	314	359	404	493	807
90,000	95,000	45.63	51	58	92	115	126	137	183	206	229	274	320	366	411	502	822
95,000	100,000	46.42	52	59	93	117	128	140	186	209	233	279	325	372	418	511	836
100,000	110,000	47.91	53	60	96	120	132	144	192	216	240	288	336	384	432	528	863
110,000	120,000	49.32	55	62	99	124	136	148	198	222	247	296	346	395	444	543	888
120,000	125,000	50.00	55	63	100	125	138	150	200	225	250	300	350	400	450	550	900
125,000	130,000	50.66	56	64	102	127	140	152	203	228	254	304	355	406	456	558	912
130,000	140,000	51.92	58	65	104	130	143	156	208	234	260	312	364	416	468	572	935
140,000	150,000	53.13	59	67	107	133	147	160	213	240	266	319	372	426	479	585	957
150,000	160,000	54.29	60	68	109	136	150	163	218	245	272	326	381	435	489	598	978
160,000	170,000	55.40	61	70	111	139	153	167	222	250	277	333	388	444	499	610	998
170,000	175,000	55.93	62	70	112	140	154	168	224	252	280	336	392	448	504	616	1007
175,000	180,000	56.46	63	71	113	142	156	170	226	255	283	339	396	452	509	622	1017
180,000	190,000	57.49	64	72	115	144	159	173	230	259	288	345	403	460	518	633	1035
190,000	200,000	58.48	65	74	117	147	161	176	234	264	293	351	410	468	527	644	1053
200,000	225,000	60.82	67	77	122	153	168	183	244	274	305	365	426	487	548	670	1095
225,000	250,000	63.00	70	79	126	158	174	189	252	284	315	378	441	504	567	693	1134
250,000	275,000	65.03	72	82	131	163	179	196	261	293	326	391	456	521	586	716	1171
275,000	300,000	66.94	74	84	134	168	185	201	268	302	335	402	469	536	603	737	1205
300,000	325,000	68.75	76	86	138	172	190	207	276	310	344	413	482	551	619	757	1238
325,000	350,000	70.47	78	89	141	177	194	212	282	318	353	423	494	564	635	776	1269
350,000	375,000	72.11	80	91	145	181	199	217	289	325	361	433	505	577	650	794	1299
375,000	400,000	73.68	82	93	148	185	203	222	295	332	369	443	516	590	664	811	1327
400,000	425,000	75.19	83	94	151	188	207	226	301	339	376	452	527	602	677	828	1354
425,000	450,000	76.63	85	96	154	192	211	230	307	345	384	460	537	614	690	843	1380
450,000	475,000	78.02	86	98	157	196	215	235	313	352	391	469	547	625	703	859	1405
475,000	500,000	79.37	88	100	159	199	219	239	318	358	397	477	556	635	715	874	1429

NET EXPLOSIVE WEIGHT (POUNDS)			DISTANCE FROM POTENTIAL EXPLOSION SITE TO EXPOSED SITE (FOR GIVEN K-FACTOR) (FEET)										
OVER	NOT OVER-	CUBE ROOT OF UPPER LIMIT	**K15/30**	**K21/30**	**K24/30**	**K30**	**K37**	**K40**	**K25/50**	**K35/50**	**K40/50**	**K50**	**K62**
			IG-PTR	IG-PTR	PTR	ACFT	HAS-PTR	POL	IG-IB	IG-IB	IB	HAS-IB	HAS-IB
0	1	1.00	15	21	24	30	37	40	25	35	40	50	62
1	2	1.26	19	27	31	38	47	51	32	45	51	63	79
2	5	1.71	26	36	42	52	64	69	43	60	69	86	107
5	10	2.15	33	46	52	65	80	87	54	76	87	108	134
10	20	2.71	41	58	66	82	101	109	68	96	109	136	169
20	30	3.11	47	66	75	94	115	125	78	109	125	156	193
30	40	3.42	52	72	83	103	127	137	86	120	137	171	213
40	50	3.68	56	78	89	111	137	148	93	129	148	185	229
50	100	4.64	70	98	112	140	172	186	117	163	186	233	288
100	200	5.85	88	123	141	176	217	234	147	205	234	293	363
200	300	6.69	101	141	161	201	248	268	168	235	268	335	416
300	400	7.37	111	155	177	222	273	295	185	258	295	369	457
400	500	7.94	120	167	191	239	294	318	199	278	318	397	493
500	600	8.43	127	178	203	254	313	338	211	296	338	422	523
600	700	8.88	134	187	214	267	329	356	222	311	356	444	551
700	800	9.28	140	195	223	279	344	372	233	325	372	465	576
800	900	9.65	145	203	232	290	358	387	242	338	387	483	599
900	1,000	10.00	150	210	240	300	370	400	250	350	400	500	620
1,000	1,500	11.45	172	241	275	344	424	458	287	401	458	573	710
1,500	2,000	12.60	189	265	303	378	467	504	315	441	504	630	782
2,000	3,000	14.42	217	303	347	433	534	577	361	505	577	722	895
3,000	4,000	15.87	239	334	381	477	588	635	397	556	635	794	985
4,000	5,000	17.10	257	360	411	513	633	684	428	599	684	855	1,061
5,000	6,000	18.17	273	382	437	546	673	727	455	636	727	909	1,127
6,000	7,000	19.13	287	402	460	574	708	766	479	670	766	957	1,187
7,000	8,000	20.00	300	420	480	600	740	800	500	700	800	1,000	1,240
8,000	9,000	20.80	313	437	500	625	770	833	521	729	833	1,041	1,290
9,000	10,000	21.54	324	453	518	647	798	862	539	755	862	1,078	1,336
10,000	15,000	24.66	370	518	592	740	NOT	987	617	864	987	NOT	NOT
15,000	20,000	27.14	408	571	652	815	AUTH	1,086	679	951	1,086	AUTH	AUTH
20,000	25,000	29.24	439	615	702	878		1,170	732	1,024	1,170		
25,000	30,000	31.07	467	653	746	933		1,243	777	1,088	1,243		
30,000	35,000	32.71	491	687	786	982		1,309	818	1,145	1,309		
35,000	40,000	34.20	513	719	821	1,026		1,368	855	1,197	1,368		
40,000	45,000	35.57	534	747	854	1,068		1,423	890	1,245	1,423		
45,000	50,000	36.84	553	774	885	1,106		1,474	922	1,290	1,474		
50,000	55,000	38.03	571	799	913	1,141		1,522	951	1,332	1,522		
55,000	60,000	39.15	588	823	940	1,175		1,566	979	1,371	1,566		
60,000	65,000	40.21	604	845	965	1,207		1,609	1,006	1,408	1,609		
65,000	70,000	41.21	619	866	990	1,237		1,649	1,031	1,443	1,649		
70,000	75,000	42.17	633	886	1,013	1,266		1,687	1,055	1,477	1,687		
75,000	80,000	43.09	647	905	1,035	1,293		1,724	1,078	1,509	1,724		
80,000	85,000	43.97	660	924	1,056	1,320		1,759	1,100	1,539	1,759		
85,000	90,000	44.81	673	942	1,076	1,345		1,793	1,121	1,569	1,793		
90,000	95,000	45.63	685	959	1,096	1,369		1,826	1,141	1,598	1,826		
95,000	100,000	46.42	697	975	1,114	1,393		1,857	1,161	1,625	1,857		
100,000	110,000	47.91	773	1,045	1,178	1,438		1,917	1,287	1,741	1,962		
110,000	120,000	49.32	849	1,112	1,238	1,480		1,973	1,415	1,853	2,064		
120,000	125,000	50.00	888	1,146	1,268	1,500		2,000	1,480	1,909	2,113		
125,000	130,000	50.66	927	1,178	1,297	1,520		2,027	1,544	1,964	2,161		
130,000	140,000	51.92	1,005	1,243	1,353	1,558		2,077	1,674	2,072	2,255		
140,000	150,000	53.13	1,083	1,307	1,408	1,594		2,126	1,805	2,178	2,347		
150,000	160,000	54.29	1,162	1,369	1,462	1,629		2,172	1,936	2,282	2,436		
160,000	170,000	55.40	1,241	1,431	1,514	1,662		2,216	2,069	2,384	2,523		
170,000	175,000	55.93	1,281	1,461	1,539	1,679		2,238	2,135	2,434	2,565		
175,000	180,000	56.46	1,321	1,491	1,565	1,694		2,259	2,201	2,484	2,607		
180,000	190,000	57.49	1,401	1,550	1,614	1,725		2,300	2,335	2,583	2,690		
190,000	200,000	58.48	1,482	1,609	1,663	1,755		2,340	2,469	2,681	2,771		
200,000	225,000	60.82	1,685	1,752	1,779	1,825		2,433	2,807	2,919	2,965		
225,000	250,000	63.00	1,890	1,890	1,891	1,890		2,520	3,149	3,150	3,151		
250,000	275,000	65.03	1,951	1,951	1,951	1,950		2,602	3,252	3,252	3,252		
275,000	300,000	66.94	2,009	2,009	2,009	2,009		2,678	3,348	3,348	3,348		
300,000	325,000	68.75	2,063	2,063	2,063	2,063		2,751	3,438	3,438	3,438		
325,000	350,000	70.47	2,115	2,115	2,115	2,115		2,819	3,524	3,524	3,524		
350,000	375,000	72.11	2,164	2,164	2,164	2,164		2,885	3,606	3,606	3,606		
375,000	400,000	73.68	2,211	2,211	2,211	2,211		2,948	3,685	3,685	3,685		
400,000	425,000	75.19	2,256	2,256	2,256	2,256		3,008	3,760	3,760	3,760		
425,000	450,000	76.63	2,299	2,299	2,299	2,299		3,066	3,832	3,832	3,832		
450,000	475,000	78.02	2,341	2,341	2,341	2,341		3,121	3,902	3,902	3,902		
475,000	500,000	79.37	2,382	2,382	2,382	2,382		3,175	3,969	3,969	3,969		

NOTES:

1. As an alternate to the table or to compute distance for K-factors not shown, use the formula $D = KxW^{1/3}$ or use multiples of given K-factors, as shown in the following examples:
   K36 distance = 2 x K18 distance
   K60 distance = 1.5 x K40 distance
   K300 distance = 10 x K30 distance

2. For weights not shown or weights over 500,000 pounds, distance may be calculated using $D=K \times W^{1/3}$.

3. K24/30, K40/50, etc., are K-factors that vary with NEW. For any of these type K-factors with a lower (Kxx) and upper (Kyy) value, the change in value is as follows:

NEW (pounds)	Kxx/yy Value
0 - 100,000	Kxx
100,000 - 250,000	Kxx-Kyy
Over 250,000	Kyy

The K-factors between 100,000 pounds and 250,000 pounds increase gradually, but not proportionately, to the NEW. These changes are based on test results that have shown increased blast effects for large NEWs. For NEWs between the values given, compute the required distance using the following formula:

For known distance [D] use: $W_x = W_L + N(W_H - W_L)$ where $N = \frac{(D - D_L)}{(D_H - D_L)}$

For known NEW [W] use: $D_x = D_L + M(D_H - D_L)$ where $M = \frac{(W - W_L)}{(W_H - W_L)}$

Where:

W_x = unknown NEW (for a given D)
D_x = unknown distance (for a given W)
M and N = calculated multiplier between .01 and .99
W_H = known NEW (from "NOT OVER" column) and distance greater than the unknown NEW (from **Table 3.6.**).
W_L = known NEW (from "NOT OVER" column) and distance less than the unknown NEW (from **Table 3.6.**).
D_H = known distance (from K factor column) and NEW greater than the unknown distance (from **Table 3.6.**).
D_L = known distance (from K factor column) and NEW less than the unknown distance (from **Table 3.6.**).

100K - 250K: K25/50 use $D = 0.004125W^{1.0898}$
K35/50 use $D = 0.3955W^{0.7227}$

K40/50 use $D= 2.42W^{0.577}$
K15/30 use $D= 0.002475W^{1.0898}$
K21/30 use $D=0.2373W^{0.7227}$
K24/30 use $D= 1.452W^{0.577}$
1160 ft - 3148 ft: K25/50 use $W= 242.4242D^{0.9176}$
1624 ft - 3148 ft: K35/50 use $W= 2.52844D^{1.3837}$
1875 ft - 3148 ft: K40/50 use $W= 0.413223D^{1.7331}$
696 ft - 1890 ft: K15/30 use $W= 404.0404D^{0.9176}$
975 ft - 1890 ft: K21/30 use $W= 4.21408D^{1.3837}$
1114 ft - 1890 ft: K24/30 use $W= 0.688705D^{1.7331}$

Table 3.7. Class/Division 1.1 Intraline Distances From Earth-Covered Igloos.

NEW (lbs)	Barricaded (ft)			Unbarricaded (ft)		
	Front	Side	Rear	Front	Side	Rear
50	35	25	20	60	60	45
100	45	30	30	80	75	55
200	60	40	35	100	95	70
300	65	45	40	120	105	80
400	75	50	45	130	120	90
500	80	55	50	140	125	95
600	85	60	50	150	135	100
700	90	60	55	160	140	105
800	90	65	55	170	150	110
900	95	70	60	175	155	115
1,000	100	70	60	180	160	120
1,500	115	80	70	210	185	135
2,000	125	90	75	230	200	150
3,000	145	100	85	260	230	175
4,000	160	110	95	290	255	190
5,000	170	120	100	310	275	205
6,000	180	125	110	330	290	220
7,000	190	135	115	340	305	230
8,000	200	140	120	360	320	240
9,000	210	145	125	370	330	250
10,000	215	150	130	390	345	260
15,000	245	175	150	450	395	295
20,000	270	190	165	490	435	325
25,000	290	205	175	530	470	350
30,000	310	220	185	560	500	370
35,000	325	230	195	590	525	390
40,000	340	240	205	620	545	410
45,000	355	250	215	640	570	425

NEW (lbs)	Barricaded (ft)			Unbarricaded (ft)		
	Front	Side	Rear	Front	Side	Rear
50,000	370	260	220	660	590	440
55,000	380	265	230	680	610	455
60,000	390	275	235	700	625	470
65,000	400	280	240	720	645	480
70,000	410	290	245	740	660	495
75,000	420	295	255	760	675	505
80,000	430	300	260	780	690	520
85,000	440	310	265	790	705	530
90,000	450	315	270	810	715	540
95,000	455	320	275	820	730	545
100,000	465	325	280	840	745	555
125,000	500	350	300	900	800	605
150,000	530	370	320	960	850	650
175,000	560	390	335	1,010	895	700
200,000	585	410	350	1,055	935	745
225,000	610	425	365	1,090	975	795
250,000	630	440	380	1,135	1,005	840
275,000	650	455	390	1,170	1,040	890
300,000	670	470	400	1,200	1,070	935
325,000	675	520	465	1,240	1,135	1,035
350,000	680	570	530	1,270	1,200	1,130
375,000	685	615	600	1,300	1,265	1,230
400,000	690	665	665	1,330	1,330	1,330
500,000	715	715	715	1,430	1,430	1,430

NOTE: Variable K factors are incorporated. See **Table 3.3.**, Note 61 for additional information.

Table 3.8. Hazard Sub-Division 1.2.1 Quantity-Distances (IB, PTR, IL)8,9 for Munitions with NEWQD > 1.6 Pounds. [7]

Explosive Weight (1)	Inhabited Building Distance (2)(3)(4)	Public Traffic Route Distance (5)	Intraline Distance (6)	Explosive Weight (1)	Inhabited Building Distance (2)(3)(4)	Public Traffic Route Distance (5)	Intraline Distance (6)
				7,000	1033	620	372
2	200	200	200	8,000	1055	633	380
5	200	200	200	9,000	1074	644	386
10	200	200	200	10,000	1090	654	392
20	200	200	200	15,000	1154	692	415
40	200	200	200	20,000	1198	719	431

Explosive Weight (1)	Inhabited Building Distance (2)(3)(4)	Public Traffic Route Distance (5)	Intraline Distance (6)	Explosive Weight (1)	Inhabited Building Distance (2)(3)(4)	Public Traffic Route Distance (5)	Intraline Distance (6)
60	200	200	200	25,000	1232	739	444
80	224	200	200	30,000	1260	756	453
100	268	200	200	40,000	1302	781	469
150	348	209	200	50,000	1335	801	481
200	404	242	200	60,000	1361	817	490
300	481	289	200	70,000	1383	830	498
400	535	321	200	80,000	1402	841	505
600	610	366	219	90,000	1419	851	511
800	662	397	238	100,000	1433	860	516
1,000	702	421	253	150,000	1489	893	536
1,500	774	464	278	200,000	1528	917	550
2,000	824	494	296	250,000	1557	934	561
2,500	862	517	310	300,000	1581	949	569
3,000	893	536	321	350,000	1601	961	576
3,500	919	551	331	400,000	1618	971	582
4,000	941	565	339	450,000	1633	980	588
5,000	978	587	352	500,000	1646	988	593
6,000	1008	605	363				

NOTES:

1. Explosive Weight = Number of Items x NEWQD.
2. IB = -735.186 + [237.559 x (ln(number of items x NEWQD))] – [4.274 x (ln(number of items x NEWQD))^2] IB in feet, NEWQD in pounds; ln is natural logarithm, with a minimum of 200 feet.
3. Number of items x NEWQD = exp[27.791-(600.392-0.234 x IB)$^{1\backslash 2}$]. IB in feet; NEWQD in pounds; exp(x) is e^x.
4. Use of equations given in Note 2 and 3 to determine IB/weight combinations is allowed.
5. PTR = 60% of IB with a minimum of 200 feet.
6. ILD = 36% of IB with a minimum of 200 feet.
7. When stored in structures which may contribute to the debris hazard, the IB for items whose MCE is greater than 31 pounds is determined by using the larger of the following two distances: those given in this table for the appropriate Explosive Weight or those given in **Table 3.9.** for the appropriate MCE. Explosives in any building are assumed to create building debris unless an engineering analysis shows fragments will not go beyond a lesser distance.

8. For IM criteria, see **Table 3.3.**, Columns 16 & 17, Rows 1-7 and 11-14.
9. See **Table 3.12.** for side and rear exposures of igloos.

Table 3.9. Minimum Fragment Distances for HC/D 1.2.1 or HC/D 1.1 Items Stored in Structures Which can Contribute to the Debris Hazard.[9, 10, 11]

MCE (lbs)	Minimum Fragment Distance [3,4,5] (ft)			
	Inhabited Building Distance (1,2)	Public Traffic Route Distance (6)	Intraline Distance	
			HC/D 1.2.1 (7)	HC/D 1.1 (8)
≤31	200	200	200	(K18)
35	249	200	200	59
40	301	200	200	62
45	347	208	200	64
50	388	233	200	66
75	546	328	200	76
100	658	395	300	84
125	744	447	300	90
150	815	489	300	96
175	875	525	315	101
200	927	556	334	106
225	973	584	350	110
250	1,014	608	365	114
275	1,051	631	378	117
300	1,085	651	391	121
325	1,116	670	402	124
350	1,145	687	412	127
375	1,172	703	422	130
400	1,197	718	431	133
425	1,220	732	439	136
450	1,243	746	447	138
>450	1,250	750	450	(K18)

NOTES:

1. For MCEs between 31 and 450 pounds: Minimum Fragment Distance for IB= -1133.9 + [389 x ln(MCE)]; MCE in pounds, Minimum Fragment Distance in feet with a minimum distance of 200 feet; "ln" is natural logarithm.

2. For IBD between 200 and 1250 feet MCE=exp[(IBD +1133.9)/389]; IBD in feet (maximum 1250 feet); MCE in pounds; exp(x) is e^x.
3. Use of equation given in Note 1 and 2 to determine MCE/Minimum Fragment Distance for MCEs between 31 and 450 pounds or IBD between 200 and 1250 feet, is allowed.
4. HC/D 1.2.1 (MCE $\geq$100 lbs), minimum Intermagazine distance for above ground magazines is 300 feet.
5. HC/D 1.2.1 (MCE <100 lbs), minimum Intermagazine distance for above ground magazines is 200 feet.
6. Public Traffic Route distance is based on 60% of the Inhabited Building distance with a minimum of Intermagazine distance.
7. HC/D 1.2.1, Intraline distance is based on 36% of the Inhabited Building with a minimum of Intermagazine distance.
8. HC/D 1.1, Intraline distance is based on K=18.
9. Use the MCE or actual quantity (NEWQD) of the HC/D 1.2.1; whichever is less to find the distances in table. For example, one NSN listed for 2.75" WP rockets has an MCE of 104.4 pounds requiring 674 feet IBD based on **Table 3.9.** (this MCE is based on the default 3 shipping containers - 12 rockets). Let's assume you only have 300 feet to the nearest IBD exposure. If you limit your M&I facility to one container (4 rockets = 34.8 lbs), then your real MCE is now 34.8 lbs based on limiting the facility to 4 rockets and the required IBD is 247 feet.
10. Explosives in any building are assumed to create building debris unless an engineering analysis shows fragments will not go beyond a lesser distance. When in doubt, contact HQ AFSC/SEW, Kirtland AFB.
11. See **Table 3.12.** for side and rear exposures of igloos.

Table 3.10. Hazard Sub-Division 1.2.2 Quantity-Distances (IB,PTR,IL)[7,8] for Munitions with NEWQD < 1.6 Pounds.

Explosive Weight	Inhabited Building Distance	Public Traffic Route Distance	Intraline Distance	Explosive Weight	Inhabited Building Distance	Public Traffic Route Distance	Intraline Distance
(1)	(2)(3)(4)	(5)	(6)	(1)	(2)(3)(4)	(5)	(6)
1	100	100	100	7,000	366	220	132
2	100	100	100	8,000	376	226	135
5	100	100	100	9,000	385	231	139
10	100	100	100	10,000	394	236	142
20	100	100	100	15,000	427	256	154
40	113	100	100	20,000	451	271	162
60	123	100	100	25,000	471	282	169
80	131	100	100	30,000	487	292	175
100	138	100	100	40,000	514	308	185
150	152	100	100	50,000	535	321	193
200	162	100	100	60,000	553	332	199
300	179	107	100	70,000	568	341	204
400	192	115	100	80,000	581	349	209
600	211	127	100	90,000	593	356	214
800	226	136	100	100,000	604	362	217
1,000	238	143	100	150,000	647	388	233
1,500	262	157	100	200,000	678	407	244
2,000	279	168	101	250,000	703	422	253
2,500	294	176	106	300,000	723	434	260
3,000	306	183	110	350,000	741	445	267
3,500	316	190	114	400,000	757	454	272
4,000	325	195	117	450,000	771	462	277
5,000	341	205	123	500,000	783	470	282
6,000	355	213	128				

NOTES:

1. Explosive Weight = Number of items x NEWQD.
2. IB = 101.649 – [15.934 x (ln(number of items x NEWQD))] + [5.173 x (ln(number of items x NEWQD))^2] IBD in feet, NEWQD in pounds; ln is natural logarithm.
3. Number of items x NEWQD = exp[1.5401+(-17.278+0.1933 x IBD)$^{1\backslash 2}$]. IB in feet; NEWQD in pounds; exp(x) is e^x.
4. Use of equations given in Note 2 and 3 to determine IBD/weight combinations is allowed.

5. PTR = 60% of IBD with a minimum of 100 feet.
6. IL = 36% of IBD with a minimum of 100 feet.
7. For IM criteria, see **Table 3.3.**
8. See **Table 3.12.** for side and rear exposures of igloos.

Table 3.11. Reserved For Future Use.

Table 3.12. Hazard Class/Division 1.2 Separation Distances From Side and Rear Exposures of all Igloos.1

Category	HC/D 1.2.1 MCE ≥100 pounds	HC/D1.2.1 MCE <100 pounds	HC/D 1.2.2	HC/D 1.2.3
Intermagazine[2] Distance	50’	50’	50’	50’
Intraline[2] Distance	50’	50’	50’	50’ MIN (3)
Public Traffic Route Distance	300’	200’	100’	50’ MIN (3)
Inhabited Building Distance	300’	200’	100’	50’ MIN (3)

NOTES:

1. For front exposures from all igloos acting as a PES, use **Table 3.3.**, columns 16, 17, 18 or 19, as applicable.
2. No separation is required to other side/rear igloo exposures.
3. See **Table 3.13.**, Note 7.

Table 3.13. Hazard Class/Division 1.3 and 1.2.3 Separation Distances. (1) (2)(4)(7)(8)(9)

NEW (lbs)	IB or PTR (ft) (3)(5)	Above-Ground IM or IL (ft)(3)(6)	NEW (lbs)	IB or PTR (ft) (3)(5)	Above-Ground IM or IL (ft)(3)(6)	NEW (lbs)	IB or PTR (ft) (3)(5)	Above-Ground IM or IL (ft)(3)(6)
1,000	75	50	92,000	296	196	560,000	627	413
2,000	86	57	94,000	297	197	570,000	632	415
3,000	96	63	96,000	298	198	580,000	636	418
4,000	106	69	98,000	299	199	590,000	641	420
5,000	115	75	100,000	300	200	600,000	645	422
6,000	123	81	110,000	307	205	610,000	649	424
7,000	130	86	120,000	315	210	620,000	654	426
8,000	137	91	130,000	322	215	630,000	658	428
9,000	144	96	140,000	330	220	640,000	662	430
10,000	150	100	150,000	337	225	650,000	667	432
12,000	159	105	160,000	345	230	660,000	671	435
14,000	168	111	170,000	352	235	670,000	675	437
16,000	176	116	180,000	360	240	680,000	679	439
18,000	183	120	190,000	367	245	690,000	684	441
20,000	190	125	200,000	375	250	700,000	688	443
22,000	195	130	210,000	383	255	710,000	692	445
24,000	201	134	220,000	390	260	720,000	696	447
26,000	206	138	230,000	398	265	730,000	700	449
28,000	210	142	240,000	405	270	740,000	704	451
30,000	215	145	250,000	413	275	750,000	708	453
32,000	219	147	260,000	420	280	760,000	712	455
34,000	224	149	270,000	428	285	770,000	716	457
36,000	228	151	280,000	435	290	780,000	720	459
38,000	231	153	290,000	443	295	790,000	724	461
40,000	235	155	300,000	450	300	800,000	728	463
42,000	238	157	310,000	458	305	810,000	732	465
44,000	242	159	320,000	465	310	820,000	735	467
46,000	245	161	330,000	473	315	830,000	739	469
48,000	247	163	340,000	480	320	840,000	743	471
50,000	250	165	350,000	488	325	850,000	747	472
52,000	252	167	360,000	495	330	860,000	750	474
54,000	254	169	370,000	503	335	870,000	754	476
56,000	256	171	380,000	510	340	880,000	758	478
58,000	258	173	390,000	518	345	890,000	761	480
60,000	260	175	400,000	525	350	900,000	765	482
62,000	262	177	410,000	533	355	910,000	769	484
64,000	264	180	420,000	541	361	920,000	772	486
66,000	266	182	430,000	549	366	930,000	776	487
68,000	268	183	440,000	556	371	940,000	779	489
70,000	270	185	450,000	564	376	950,000	783	491
72,000	272	186	460,000	571	381	960,000	786	493
74,000	274	187	470,000	579	386	970,000	790	495
76,000	276	188	480,000	586	391	980,000	793	496
78,000	278	189	490,000	593	395	990,000	797	498
80,000	280	190	500,000	600	400	1,000,000	800	500
82,000	284	191	510,000	605	402			
84,000	287	192	520,000	609	404			
86,000	290	193	530,000	614	407			
88,000	293	194	540,000	618	409			
90,000	295	195	550,000	623	411			

NOTES:

1. For quantities less than 1,000 lbs, the required distances are those specified for 1,000 lbs. The use of lesser distances may be approved when supported by test data and/or analysis. Linear interpolation of NEW quantities between table entries is permitted. For quantities above 1,000,000 lbs, the values given above will be extrapolated by means of cube-root scaling as follows:
   a. For inhabited building distance (IB) and public traffic route (PTR) distance, use $D = 8 W^{1/3}$.
   b. For aboveground intermagazine distance (IM) and intraline distance (IL), use $D = 5 W^{1/3}$.
2. List of items (examples only): Military pyrotechnics; solid propellants in bulk, in containers, or in ammunition items; and nontoxic chemical ammunition.
3. Items will be placed in this hazard division if they qualify for assignment to it after evaluation in accordance with **Chapter 2**.
4. For reasons of operational necessity, limited quantities of items in this hazard division, such as document destroyers, signaling devices, riot control munitions and the like, may be stored without regard to quantity-distance in accordance with fire protection regulations in facilities such as hangars, arms rooms, and operating buildings.
5. The same distances are used for IB and PTR.
6. The same distances are used for aboveground IM and IL. Earth-covered buildings may be used to their physical capacity for this hazard division provided they comply with the construction and siting requirements of **Chapter 3** for HC/D 1.1. Earth-covered magazines used to store only HC/D 1.3 items must be sited for a minimum of 100 lbs of HC/D 1.1 item.
7. The IBD for Unit Risk HC/D 1.2.3 is determined by using **Table 3.13.** (Hazard Class Division 1.3 and 1.2.3 Separation Distances) for the NEWQD of the HD 1.2.3 item multiplied by the number of rounds present, but with a minimum IBD determined as follows: If the items are in a structure that can interrupt primary fragments and can contribute debris, the minimum IBD is the hazardous debris distance given in **Table 3.9.** for an MCE equal to the NEWQD of a single round. If the items are in the open or in a light structure that will not interrupt primary fragments, the minimum IBD is the hazardous primary fragment distance based on the HD 1.1 hazardous fragment area number density criteria applied to a single HD 1.2.3 item. The hazardous fragment distance applicable to items in the open is specified in hundreds of feet in parentheses as "(xx) 1.2.3." PTR for HD 1.2.3 is equal to 60% of IBD. ILD is computed as 36% of IBD, with a minimum distance equal to the Intermagazine Distance (IMD). See **Table 3.3.**, column 19 for IMD guidance.
8. See paragraph **2.41.**, *Multicube or Segregated Magazines,* for special considerations when storing limited amounts of explosives.
9. See **Table 3.12.** for side and rear exposures of igloos (HC/D 1.2.3 only).

Table 3.14. Hazard Class/Division 1.6 Separation Distances.

NEW (lbs)	IBD or PTR (ft)	IM or IL (ft)	NEW(lbs)	IBD or PTR (ft)	IM or IL (ft)
0-100	37	23	75,000	337	211
200	47	29	80,000	345	215
300	54	33	85,000	352	220
400	59	37	90,000	359	224
500	64	40	95,000	365	228
600	67	42	100,000	371	232
700	71	44	110,000	383	240
800	74	46	120,000	395	247
900	77	48	125,000	400	250
1,000	80	50	130,000	405	253
2,000	101	63	140,000	415	260
3,000	115	72	150,000	425	266
4,000	127	79	160,000	434	271
5,000	137	86	170,000	443	277
6,000	145	91	175,000	447	280
7,000	153	96	180,000	452	282
8,000	160	100	190,000	460	287
9,000	166	104	200,000	468	292
10,000	172	108	225,000	487	304
15,000	197	123	250,000	504	315
20,000	217	136	275,000	520	325
25,000	234	146	300,000	536	334
30,000	249	155	325,000	550	344
35,000	262	164	350,000	564	352
40,000	274	171	375,000	577	361
45,000	285	178	400,000	589	368
50,000	295	184	425,000	601	376
55,000	304	190	450,000	613	383
60,000	313	196	475,000	624	390
65,000	322	201	500,000	635	397
70,000	330	206			

NOTES:

1. Earth-covered magazines may be used to their physical capacity for this hazard division, provided they are properly sited for at least 100 lbs HC/D 1.1.
2. Interpolation is permitted. For inhabited building distance and public traffic route use D = 8W 1/3. For aboveground IM and IL distance use 5W 1/3.

3. Single round distance applies as a minimum; that is, for IB or PTR, D = 40W 1/3 or minimum fragment distance, whichever is greater; and for aboveground IM or IL, D = 18W 1/3, based on a single round of ammunition. Minimum fragment distance is based on hazardous fragment aerial density requirements as determined for HC/D 1.1 munitions.

4. When specifically approved by HQ AFSC/SE, HC/D 1.6 items, packed in non-flammable pallets or packing, may be stored in earth-covered igloos at the following distances, unless **Table 3.14.** permits a lesser distance requirement: IB and PTR--100 ft; aboveground IM and IL--50 ft; earth-covered IM--No specified requirement.

3.12. Barricades.

3.12.1. Protection against high-speed, low-angle fragments. Properly constructed or natural barricades provide protection against low angle fragments. Barricades or earth-covered structures eliminate the risk of propagating explosions caused by low-angle, high-speed fragments and should prevent simultaneous detonation of an explosion. Barricade elevation is effective when a straight line, drawn from a point described in paragraph **3.12.1.1.** to a point described in paragraph **3.12.1.2.**, passes through the top width of the barricade. A barricade of this elevation should prevent simultaneous detonation of an explosion from one quantity of mass-detonating explosives to another (see **Figure 3.2.**).

3.12.1.1. From:

3.12.1.1.1. The top of the side wall of a magazine or operating building.

3.12.1.1.2. The top of a stack containing explosives, as in paragraph **3.12.1.1.4.**

3.12.1.1.3. Explosive items on aircraft or emplaced missiles.

3.12.1.1.4. Base barricade heights derived from the use of **3.12.1.1.2.** on the following. A straight line drawn from the top of the far edge of the stack edge away from the barricade at a two degree angle above the horizontal must pass through the 3-feet width of the crest (berm) of the barricade. Where feasible, scale barricade heights up 3 to 5 feet, based on a line drawn (as explained above) at an angle of 5 degrees above the horizontal. When protecting aircraft, facilities and personnel at K26 or less, a vertical-sided barricade provides a reduction in blast overpressure to 3 or 4 times the height of the barricade in a horizontal line (for example, a 20-foot barricade would shield a 40-foot-deep building setting 20 feet from the barricade, from low-angle, high-speed fragments and some blast pressure). The slope-sided barricade may ricochet fragments and is less effective in deflecting blast pressure.

3.12.1.2. To:

3.12.1.2.1. The highest point of any exposure being protected.

3.12.1.2.2. A point 12 feet above the center of any highway or railway being protected.

3.12.1.2.3. Barricade protection to the highest point on an aircraft or missile launcher may be desirable to reduce direct fragment damage to the aircraft.

3.12.2. Overpressure Mitigation. Based on experimental work, the overpressure loading on a surface shielded by a barricade is reduced by 50% when the following length, height, and location conditions are satisfied.

3.12.2.1. Location. The barricade must be located within two barricade heights from the ES.

3.12.2.2. Height. The top of the barricade must be at least as high as the top of the ES.

3.12.2.3. Width. The width of the barricade must be at least two times the width of the ES.

3.12.3. Natural Barricades. Protected storage facilities built underground, into hills or separated by hills may permit reduced Q-D. Consider each case separately. Submit details in the site plans, including topographical maps of the terrain.

3.12.4. Artificial Barricades. Select cohesive earth fill, free from unhealthy organic matter, trash, debris, and frozen material. Don't use stones heavier than 10 pounds or larger than 6 inches and keep in the lower center of the barricade. Compact and prepare the surface to keep structural integrity and control erosion. Effective artificial barricades are:

3.12.4.1. Earth, 20 feet or less in height, having a crest (berm) at least three feet wide. The slope will not be steeper than 1.5 horizontal to 1 vertical. Use slopes of 2 horizontal to 1 vertical for new facilities to reduce erosion and ease maintenance.

3.12.4.2. Earth more than 20 feet in height and at least 5 feet wide at the top, with earth sloping as in paragraph **3.12.4.1.**

3.12.4.3. Earth meeting the requirements of paragraphs **3.12.4.1.** or **3.12.4.2.**, modified by substituting a retaining wall for the slope on one side. The slope and thickness of the retaining wall (preferably of concrete) must ensure a wide enough top to hold the earth firmly in place.

3.12.5. Earth-Filled, Steel-Bin-Type Barricades (ARMCO, Republic type, or equal.) These barricades will prevent simultaneous detonation of adjacent explosives; however, they will not prevent major damage or destruction of aircraft or munitions.

3.12.5.1. A connected series of such revetments may be sited for the explosives weight of one revetment.

3.12.5.1.1. Site flightline revetment sets for combat aircraft parking and loading as a combat aircraft parking area according to **Table 3.3.** These revetment sets may be used for both aircraft parking and munitions holding.

3.12.5.1.2. Site flightline revetment sets used for munitions as flightline munitions holding areas according to **Table 3.3.**

3.12.5.1.3. Sites used solely for the storage of munitions as barricaded (ES) above-ground magazines according to **Table 3.3.**

3.12.5.2. To limit mishap potential, munitions should be dispersed as widely as possible within each cell. Munitions shall be positioned with the objective of distributing them over the available area within the cell, rather than concentrating them in a small area. The contents of a cell (stored in quantities near the maximum NEW limit) must not be configured into a single row of stacks, pallets, or trailers. However, in all cases, explosives will be positioned at least 10 feet from revetment walls, 3 feet from the end of the wing walls, and 2 feet below the top of walls. Storage of munitions in flammable outer-pack configurations must be minimized. See **Attachment 8** for a list of munitions approved for this type of storage.

3.12.5.2.1. Revetments with earth-filled walls at least 6 feet 11 inches thick may be used to limit the Maximum Credible Event (MCE) in a series of cells to the largest quantity in any single cell if that quantity does not exceed 30,000 pounds NEW.

3.12.5.2.2. Revetments with earth-filled walls at least 5 feet 3 inches thick may be used to limit the MCE, provided no cell contains more than 5,000 pounds NEW.

3.12.6. Inspection of Barricades**.** Inspect barricades periodically to determine the degree of settling or erosion. Add fill if a barricade has deteriorated and it no longer provides effective protection. Also inspect wood riveted barricades and replace rotten timbers or planking.

3.12.7. Siting Barricades. For protection against high-velocity, low-angle fragments a barricade may be placed anywhere between the PES and ES providing the criteria in paragraph **3.12.1.** is met. See paragraph **3.12.2.** for siting an overpressure mitigation barricade.

3.12.8. Magazines as Barricaded Structures. The earth cover over an igloo magazine must be at least 2 feet deep. Earth cover and side fill requirements are the same as for barricades in paragraph **3.12.4.** Restrict any large stones to the lower half of fills. The earth covers on the sides and rear of an igloo may be treated as barricades. Consider an aboveground magazine barricaded when it is protected by a barricade meeting the requirements of paragraph **3.12.3.** or **3.12.4.** A concrete-arch or steel-arch, earth-covered igloo is the preferred type of "barricaded" magazine for storing maximum amounts of HC/D 1.1 explosives, with minimum separation between locations. Consider igloo magazines as barricaded except for a 60 degree arc on either side of the centerline of the door. See Figure 3.3B for description of unbarricaded area for igloo door, side and rear exposures. Consider as side exposure of an igloo the area from the radial of the front unbarricaded angle to a radial 45 degrees at the rear of the igloo with the base of the angle extending along the side, perpendicular and past the rear wall. The rear exposure of an igloo is the area between the two 45-degree angles which are the rear limits of the side exposure (see **Figure 3.4.**). For those igloos with unusual orientations refer to **Figure 3.3.**:

3.12.8.1. In **Figure 3.3.**(a) and (b) site A is a side-to-side ES and site B is a side-to-side orientation. Think of the orientations as from the PES to the ES.

3.12.8.2. In **Figure 3.3.**(c) site A as a side-to-front ES and site B as a front-to-side ES.

3.12.8.3. In **Figure 3.3.**(d) site each igloo as a front-to-front ES. Site C as a barricaded ES. Site A and B as unbarricaded ESs.

3.12.8.4. In **Figure 3.3.**(e) site A as a side-to-front ES and site B as a front-to-side ES.

3.12.8.5. In **Figure 3.3.**(f) site A as a side-to-front ES and Site B as a front-to-side ES.

3.12.8.6. See **Figure 3.3.**(g): When considering the relationship between igloos and aboveground magazines or operating locations apply the following:

3.12.8.6.1. For *igloo* siting applications, no credit is given for a barricade in front of an igloo acting as a PES. When acting as an ES, the same igloo with a barricade in front may be sited as a barricaded ES.

3.12.8.6.2. For *igloo* siting applications, no credit is given for a barricade in front of an aboveground magazine acting as a PES. When acting as an ES, the same aboveground magazine with a barricade in front may be sited as a barricaded ES.

3.12.9. Barricade Value.

3.12.9.1. Barricades have no effect on high-angle fragments that escape over their top. Some of these fragments may travel to the outer limits of protection areas set up for PTR and IB distances.

3.12.9.2. Eliminating dangerous low-angle, high-velocity fragments by barricading considerably reduces fragment density within a given radius. This will not reduce the size of the hazardous circle at distances discussed in paragraph **3.12.8.1.**

3.12.9.3. Barricades, if properly designed and located, stop fragments. A barricade at the source can reduce fragment speed and density where high-density exposures of personnel and equipment may occur. A secondary barricade at sites of mission-essential equipment and personnel (such as wing communications and trim pads) can provide some additional protection; however, high-angle, low-velocity fragments will still impact the exposed site.

Figure 3.2. Typical Barricade - Stack Relationships.

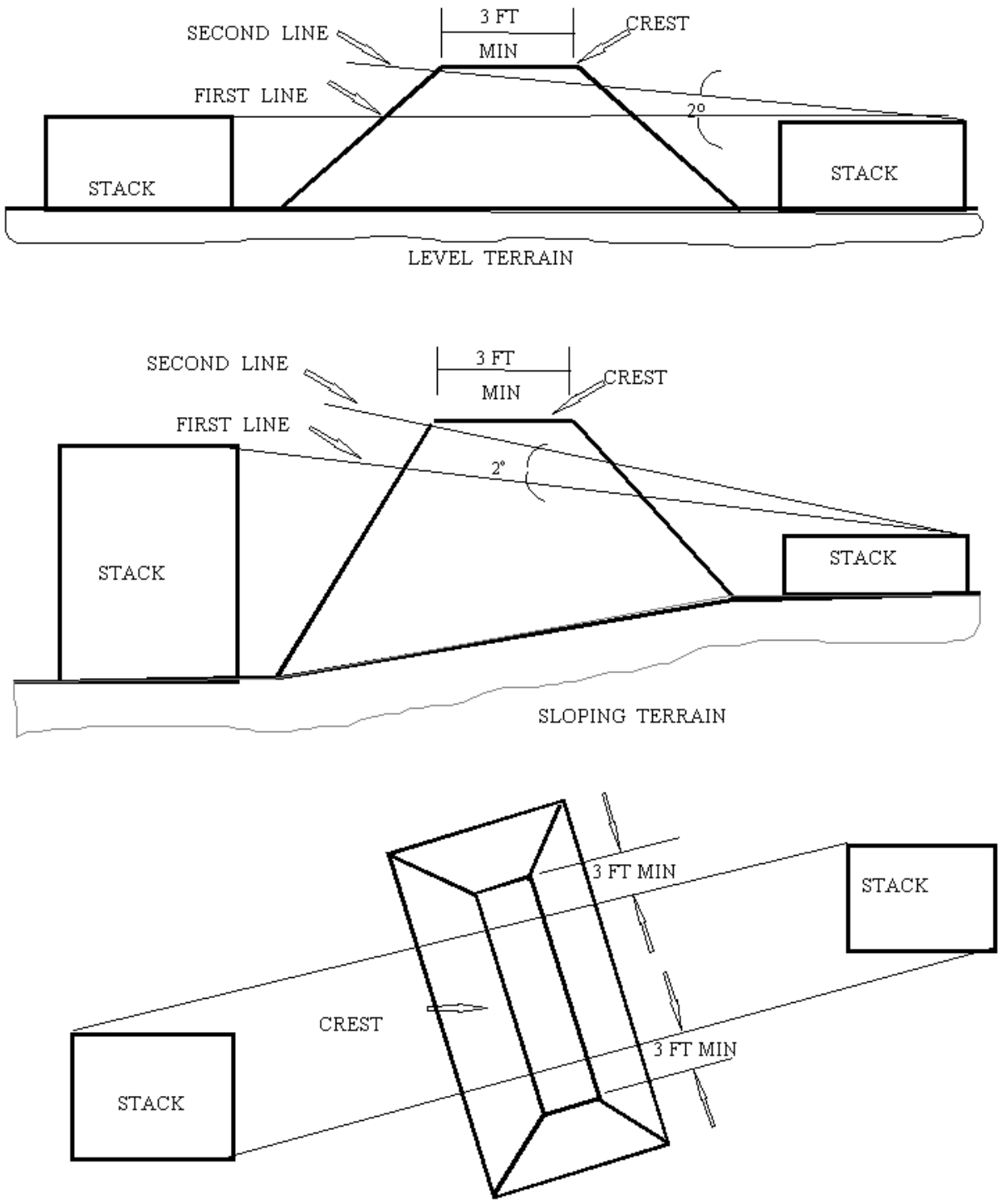

Figure 3.3. Orientation Effects on Intermagazine Distance.

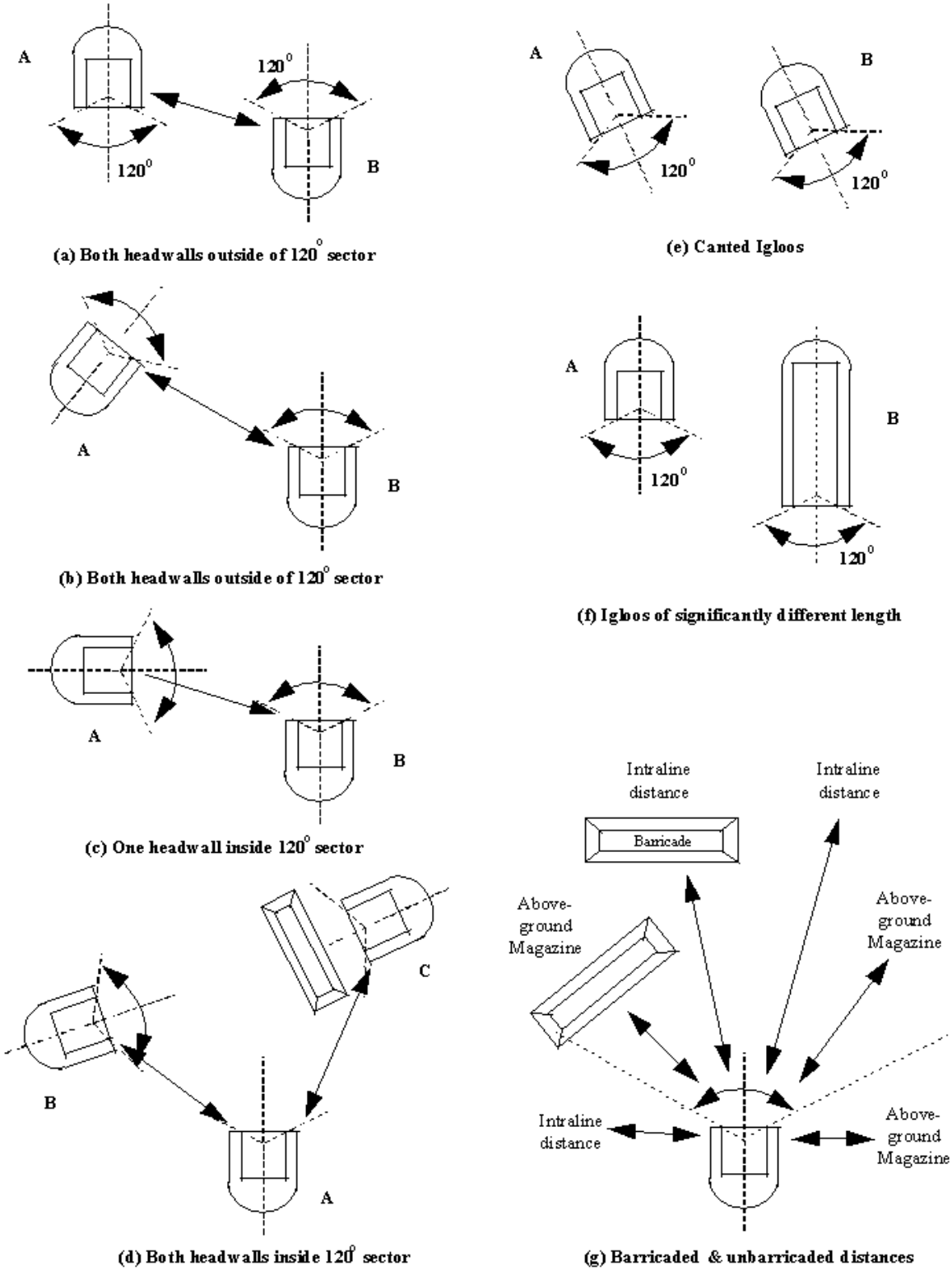

3.12.9.4. Barricades with sloped sides are less effective than those with vertical sides (for example, steel bin barricades at least K1.1 from the source) in reducing blast pressure. However, for sources under 100,000 pounds NEW, either may give overpressure reduction of several psi out to three or four times the height of a barricade. The barricade becomes less effective as the blast wave progresses toward K40, where it is negligible; however, even here it is still effective against low-angle fragments. For quantities greater than 100,000 pounds NEW, the barricade provides some reduction in overpressure out to K15; however, it tends to increase overpressure from K15 to K40. Therefore, use of barricades at sources over 100,000 pounds NEW makes desirable the use of K28 to K36 for PTR distance, instead of K24/30 which is prescribed.

3.12.9.5. Barricades around the exposed site can be used to reduce minimum separations required by **Table 3.3.** or fragment distances from 1.2 munitions if tests or engineering analysis show the barrier will stop the low-angle, high-velocity fragments and the building will provide protection from the high-angle fragments that can be expected from the PES. The distance cannot be reduced below that required to provide adequate overpressure protection to the ES.

Section 3C—Q-D Criteria For Specific Facilities or Situations

3.13. Related Facilities. Certain non-explosives facilities that closely support a PES are known as related facilities. Use K18 separation for these facilities from the supported PES.

3.13.1. General Related Facilities. Separate PESs from the applicable ESs listed below by the following minimum distances. Provide greater separations where possible.

Table 3.15. Related Facilities.

Facility	Separation Required
Gatehouses; field offices[2,3]; dunnage preparation; small packing and shipping buildings; dog kennels; area security control (not central security control [CSC]); motor pool dispatch points (for vehicles supporting storage area only); staffed power plants and staffed non-explosive hazardous material collection points (only supporting the weapons storage area); maintenance and inspection facilities; response force tactical facilities (RFTF); lunch rooms (with serving personnel); breakrooms and change houses supporting multiple PESs; inert operations involving components of an explosive weapon system.[4]	Use the "Related Facilities" line of **Table 3.3.**
Non-explosives auxiliary storage facilities[6]; one-person guard towers[1,3], hazardous material collection points[7], unoccupied power plants or transformer stations; which exclusively support an explosives storage area.	50 feet
Low pressure boilers[5]; paint storage buildings providing direct support to the PES.	50 feet
Guard (sentry) shelters and defensive fighting positions. Breakrooms, supply rooms, offices[2] and change houses used exclusively by personnel with duties within a single PES.	None

NOTES:

1. When essential for security purposes, site one-person guard towers at a distance equal to the height of the tower plus 50 feet (fire break distance) from explosives locations. However, the distance must not be less than the minimum given above.

2. Do not apply Q-D to the offices of personnel (located within the PES) who perform hands-on maintenance in the bays (assemble, maintain, inspect, and test). The NCOIC and first level supervisors (crew chiefs) of those who do hands-on work, are also included in this Q-D exemption. Apply IL to branch/flight level supervision. For example, a missile shop does not need Q-D separation to those persons assigned, who perform missile maintenance, and their supervisors, to include the NCOIC of the missile shop. IL applies to anyone else, such as Munitions Operations (AFK), munitions control, training, mobility, etc.
3. One-person security structures for weapons-loaded aircraft are exempt from separation requirements. However, provide the distance shown when possible.
4. The operation must involve support of an explosive operation such as repairing bomb fins, or the operation simulates an explosive operation, for example: Munitions Assembly Conveyor (MAC).
5. Some specially designed operating buildings have attached rooms for low-pressure boilers and other facilities. These buildings have safety features such as protective concrete separating walls (without openings) between boiler and working areas, light roof and frangible exterior walls for boiler enclosures. Such buildings, built according to Air Force definitive drawings, are exempt from these distance criteria. This exception applies only where equipment installed or contained in attached rooms meets or exceeds original specifications and does not create additional hazards.
6. The loss of the non-explosives material must not adversely impact the mission.
7. Manned hazardous waste collection points which exclusively support an explosives storage area may be separated at IL. Hazardous waste collection points which do not exclusively support an explosives storage area must be separated at IBD.

3.13.2. Munitions or Weapons Storage Area Related Activities. Activities directly associated with munitions storage or munitions operations are considered related. All related operations or activities within a munitions area are related to one another, regardless of the owning service, organization or country. As an exposed site related facilities must not only be separated by IL from a PES they are related to, (e.g., the munitions storage area office from the munitions storage area igloos), but must also be separated from any PES outside the munitions storage area they are not related to by incremental IBD (e.g., the munitions storage area office from a combat aircraft). However, explosives operating locations may be protected by IL distance from combat aircraft.

3.13.3. Direct Combat Aircraft Generation Related Facilities. All facilities and functions directly involved in maintaining, servicing, controlling, and flying combat aircraft are considered related to ammunition and explosives on the flightline supporting those combat aircraft. Flightline related facilities and functions, which have in common, the need to directly support the same combat aircraft, can be considered integral parts of aircraft generation; this also applies to “related” flightline munitions operating locations and pre-load areas. Because combat aircraft generation cannot progress without their combined efforts, these flightline support functions and facilities may be considered “related” to each other, if they are considered “related” to the combat aircraft. Therefore, all support functions and facilities deemed “related” to combat aircraft generation activities on the flightline may be located at IL distance from one another. For Q-D purposes, all combat forces at a single location are considered related. This may include Air Force, Army, Navy, Marines, and host nation aircraft. One set of Q-D criteria applies to all combat forces at a single location (e.g., facilities/functions related to Air Force

fighter aircraft are also related to Navy fighter aircraft). When the services disagree on the required safety distance for Interservice Explosive Facilities, forward the problem through channels to HQ AFSC/SE for action.

3.13.3.1. Separate unhardened combat aircraft generation related facilities from munitions storage and operating facilities by incremental K40/50. If these functions are located in a HAS, reduce separation to K30 to the frontal cone and K9 or K18 (**Table 3.3.**, note 6) to the sides or rear. Site other hardened facilities at less than K40/50, depending on the design of the facility and the hazards of the PES to provide equivalent protection.

3.13.3.2. The primary test to be applied in determining related facilities is that the function must provide essential daily and direct support for the PES presenting the hazard.

3.13.3.3. Examples of facilities and functions generally considered related to combat aircraft generation include:

3.13.3.3.1. Logistics Group and Operations Group functions.

3.13.3.3.2. POL or LOX servicing facilities, including hot pit refueling areas.

3.13.3.3.3. Civil engineering functions solely dedicated to maintaining the runway and taxiways.

3.13.3.3.4. Forward supply points.

3.13.3.3.5. Intelligence, debriefing, and flightline security functions.

3.13.3.4. Q-D separation standards do not apply to arm and de-arm pads when the PES is an aircraft undergoing servicing at these locations. For hot pit refueling pads see **Table 3.3.**, Note 67.

3.13.4. Cargo Aircraft Separations. Parked explosives-loaded cargo aircraft are considered a storage function for purposes of assigning Q-D standards. Flightline personnel who solely support these aircraft and all munitions maintenance activities are considered related. Other flight-line facilities/activities which are not directly supporting these operations and maintenance will be separated by incremental K40/50 (minimum fragment distances are not required). End-of-runway/de-arm crew shelters do not require separation from explosives-loaded cargo aircraft. See **Table 3.3.**, note 66.

3.13.5. Defensive Missile Battery Separation. The following criteria apply to deployed defensive missile batteries (e.g., Patriot missiles) and associated support functions (see **Table 3.3.**).

3.13.5.1. Missile batteries deployed in IBD clear zones may be sited at K18 to manned functions considered related to those explosive operations.

3.13.5.2. Those functions solely providing support to defensive missile units, such as motor pools, may be sited at K18 to batteries and other explosive activities when the missile battery is located in these areas.

3.13.5.3. No separation is required between missile batteries and the security force structures exclusively supporting them.

3.13.6. Facilities not Related. The following facilities are not considered “related” to any potential explosion site:

3.13.6.1. MWR facilities, except those exclusively used by flightline personnel.

3.13.6.2. Base civil engineering headquarters.

3.13.6.3. Central base supply.

3.13.6.4. Family housing, passenger terminals, and chapels.

3.13.6.5. Military billets, including permanent party dormitories, transient quarters, and other temporary billeting facilities, such as tent cities.

3.13.6.6. Commissaries, schools, and nurseries.

3.13.6.7. Wing and base headquarters, staff agencies (plans, manpower, safety, comptroller functions, etc).

3.13.6.8. Hospitals and dispensaries.

3.13.6.9. Theaters.

3.13.6.10. Main exchanges, except for flightline annexes.

3.13.6.11. Base fire departments, except for flightline fire stations.

3.13.6.12. Law enforcement and central security control.

3.13.6.13. Hydrazine servicing facilities which support multiple bases.

3.14. Rocket Storage, Checkout, and Assembly (RSCA) Building. (Air Force Definitive Drawing 33-39-03) 3/8" steel doors must be installed to meet requirements.

3.14.1. As an ES, if the RSCA is used as an operating location, use IL from the PES it is supporting. For example, chaff and flare and argon recharging operations in the RSCA may be separated by IL from the combat aircraft they are supporting.

3.14.2. As a PES, each bay may singularly store physical capacity of HC/D 1.4, 100 lbs of HC/D 1.3 and 50 lbs of HC/D 1.2.2 or (04) 1.2 with zero IM bay to bay and zero IL, PTR, and IB. Use normal IM criteria to other PESs. If used as an operating location to support combat aircraft, apply IL to the same facilities/activities as in paragraph **3.13.3.** When the RSCA is located outside of an explosives clear zone, licensing requirements apply (see paragraph **2.35.**).

3.15. Loading Docks. Site loading docks used for the transfer of munitions between transportation modes and involving lifting as an operating location. Loading docks used to support multiple storage or operating locations are considered above ground magazines for Q-D purposes. Q-D does not apply to loading docks used to support a single PES.

3.16. Vehicle and Rail Transportation Areas. Quantity-distance (Q-D) criteria does not apply to munitions and explosives in the transportation mode. See paragraphs **2.59.** through **2.78.** for explosives safety requirements for transportation.

3.16.1. Incoming Vehicle and Rail Inspection Stations. If used solely as an inspection area, Q-D does not apply. The inspection station should be as remote as practical from hazardous areas such as explosives, POL sites, populated areas, and flightlines. If the inspection station is used for explosives storage or as a suspect vehicle holding area, it must meet Q-D criteria.

3.16.2. Vehicle and Rail Interchange Yards. Where necessary, an interchange yard may be established in a remote area on the same basis as, or together with, the inspection station in paragraph **3.16.1.**

above. Explosives Q-D criteria will not be applied if the exchange is made and the vehicles/railcars removed promptly.

3.16.3. Site vehicle and rail holding yards as above ground magazines.

3.16.3.1. Where possible, explosives-loaded vehicles/railcars should be separated from each other by the applicable aboveground magazine distance.

3.16.3.2. If magazine distance between vehicles/railcars cannot be met, they should be parked in groups, with magazine separation between each group. Distances to other exposures will then be based on the total amount of explosives within a group of vehicles/railcars.

3.16.3.3. Where neither **3.16.3.1.** nor **3.16.3.2.** above is possible, the total explosives weight of all vehicles will be used to determine separation distances.

3.16.4. In developing large rail holding yards, consider the following layout guidance:

3.16.4.1. Design rail holding yards on a unit car or explosives weight group basis (e.g., 50,000, 100,000, or 250,000 net pounds of HC/D 1.1 explosives, regardless of the number of cars involved). Separate each explosives quantity car group from all other groups by IM distance.

3.16.4.2. Yards may be formed by two parallel ladder tracks connected by diagonal spurs or by a "Christmas tree" arrangement (a ladder track with diagonal dead-end spurs projecting from each side at alternate intervals). Other arrangements tailored to the operation are allowed. However, separate parallel tracks and spurs of all types by intermagazine distances for the group quantities of explosives involved.

3.16.5. Rail Classification Yards. Where the volume of rail traffic necessitates, establish a classification yard primarily for receiving, classifying, switching, and dispatching explosives-laden rail cars. Intermagazine Q-D separation is required, as a minimum, between PESs of all types and the classification yard. Within the classification yard, no Q-D separation is required between individual cars unless the yard is used for other purposes (such as placing or removing dunnage or explosive items into or from cars). Then Q-D criteria between cars will apply. No Q-D separation is required from the classification yard to any non-explosives exposed sites.

3.16.6. Railcars or Vehicles Spotted at Operating Buildings**.** Rail cars and vehicles should not be used as service magazines for operating buildings or locations. If such use is essential, park at intraline distance from the operation or operating building.

3.16.7. Transportation Mode Change Locations. Intraline Q-D separation applies to all transfer operations involving explosives except for:

3.16.7.1. Roll-on/roll-off operations (not involving lifting); and,

3.16.7.2. Off-installation MILVAN/ISO container inter-/intramodal transfers, including Trailer on Flat Cars (TOFC), where containers are not stored or other operations are performed. No Q-D separation is required for these operations.

3.17. Vehicle Parking Areas.

3.17.1. Government Owned Vehicle (GOV) Parking. GOV and powered Aerospace Ground Equipment (AGE) parking areas will be located at least 100 feet from explosive locations. Other motor pools normally require IB separations because of office, workshops, and other inhabited areas. Tem-

porary parking of GOVs and AGE, other than those being loaded or unloaded, will not be parked closer than 25 feet to any explosives facility. Temporary means the length of time for which the presence of the vehicle is essential to completion of a single task (e.g., a single work order number). This restriction does not apply to approved operations inside hardened aircraft shelters. Local fire and safety officials may reduce these parking requirements for licensed locations.

3.17.2. Privately Owned Vehicles (POV) Parking. Separate POV parking lots supporting multiple PESs by IL. When a POV parking lot supports a single PES it may be 100 feet minimum from its associated facility and IL from all other PESs. Parking areas for all other POVs should be located outside munitions storage areas and at least PTR distance from explosives locations. Minimum fragment distance applies except for POVs supporting a PES. Local fire and safety officials may reduce these parking requirements for licensed locations.

3.17.3. War Reserve Materiel (WRM) Vehicles Parking. Parking areas used exclusively for WRM vehicles will be sited at IL distances from explosives locations. PTR or IBD should be used, when possible, to prevent unacceptable damage to critical war support vehicles and equipment.

3.18. Warehouses. As a minimum, these facilities will be separated from explosives locations by the applicable unbarricaded, intermagazine distance. When the warehouse is used for non-munitions WRM (trailers, etc) use IL. Separation by PTR or IB distance should be used, when possible, to further limit damage or loss of assets.

3.18. (PACAF) Inert storage facilities, such as small sheds, that support specific buildings in the clear zone must be a minimum of 50 ft from any PES.

3.19. Electrical Utilities. The following Q-D criteria apply to each explosives location within an explosives storage area and to flightline munitions holding areas. They do not apply to services provided to individual or group explosives facilities when that service is not also secondarily provided to other parts of the installation or community. They do not apply to licensed explosives locations on the base (such as survival equipment rooms, egress systems maintenance shops, or armories).

3.19.1. For aboveground electrical transmission lines carrying less than 69 kilovolts (kV), the towers or poles supporting these lines and unmanned electrical substations will be no closer to explosives exposures than incremental PTR distance.

3.19.2. For aboveground electrical transmission lines carrying 69 kV or more, the towers or poles supporting these lines and power houses which are part of a grid system serving a large off-base area will be located no closer to explosives exposures than incremental inhabited building distance. Incremental PTR may be used if loss of the line will not create serious social or economic hardships.

3.19.3. Electrical transmission lines which can be interrupted without loss of power (i.e., power is rerouted through other existing lines or networks) will be separated from combustible explosives facilities and open PESs by at least the distance between the poles which support the lines, unless an effective means is provided to ensure that energized lines on breaking cannot come into contact with the facility. No separation is required for non-combustible facilities.

3.19.4. Unoccupied power plants or transformer stations that exclusively support an explosives area must be separated by at least 50 feet. Transformers that directly support a single PES requires no separation.

3.20. Hardened Aircraft Shelters (HAS) and Flow-thru Revetments. **Table 3.16.** and **Table 3.17.** show intershelter separation requirements that provide different levels of protection to meet different levels of risk. **Table 3.3.** shows separation requirements to other facilities. Paragraph **3.12.5.** provides criteria for revetments.

3.20.1. The separations shown in **Table 3.16.** provide reasonable assurance that aircraft in closed hardened shelters will remain operable should an explosion occur in an adjacent shelter or ready service storage facility. These aircraft may not be immediately removable due to debris. For shelters with third generation-type rear doors, the aircraft may be damaged substantially unless modifications have been made to prevent the rear doors from being blown against the aircraft.

3.20.2. The separations shown in **Table 3.17.** will prevent simultaneous detonation between adjacent shelters, aircraft or ready service storage facilities. However, these adjacent structures, aircraft and stored munitions may be substantially damaged or destroyed. This is equivalent protection to that provided unsheltered aircraft separated by intermagazine distance (K6 or K11).

3.20.3. Use **Table 3.16.** to site first, second, and third generation shelters sited and constructed after December 1984. Separate first, second, and third generation shelters, sited and constructed before 1984, used to store munitions in peacetime from other shelters and ready service storage facilities according to **Table 3.16.** The MAJCOM commander may approve the use of the separations in **Table 3.17.** Use **Table 3.17.** to separate Korean TAB VEE and flow-thru shelters and ready service storage facilities from other shelters and ready service facilities. The MAJCOM may establish procedures to allow use of the lesser separations in **Table 3.17.** to first, second, and third generation shelters during periods of increased readiness or during operational readiness exercises.

3.20.3. (PACAF) First, second, and third generation shelters at Osan, Kunsan, Kwang Ju, Suwon, Taegu, and Cheong Ju Air Bases are authorized to use intershelter separation criteria in **Table 3.17.** (see **Attachment 13 (Added**).

3.20.4. HASs used solely as permanent maintenance facilities would normally be classified as related facilities and require IL separation from supported PES (HAS containing combat configured aircraft, etc.). However, because TAB VEE and second and third generation HAS provide increased protection to equipment and personnel, the reduced separations shown in **Table 3.16.** are permitted with the following provisions:

3.20.4.1. Don't use the maintenance HAS for storage of explosives (except as permitted for a licensed facility per paragraph **2.35.** or parking of explosives-loaded aircraft as defined in paragraph **3.25.4.**).

3.20.4.2. Keep the maintenance HAS doors closed (except for short periods to move equipment in and out, run aircraft engines, etc.) whenever the maintenance HAS is exposed to a PES capable of generating an overpressure of 3.5 psi or greater (normally K18 or less separation).

3.20.4.3. The maintenance HAS is located no closer than 300 feet from any PES HAS (except for 3rd generation) sited for more than 500 pounds NEW. Separate maintenance HAS from 3rd generation PES HAS according to **Table 3.16.** and the minimum distances in note 62 of **Table 3.3.**

3.20.5. AIM-7, AIM-9, and AGM-65 missiles meeting the missile-to-missile separation requirements of paragraph **3.34.** may use the separations in **Table 3.18.** For the AIM-7M with the WAU-17/B warhead, use **Table 3.18.**, if no more than three warheads are in radial alignment. If necessary, store 20mm and 30mm ammunition with these missiles.

3.20.6. The side walls of the arch provide a shotgun effect that projects most hazardous fragments in a 30-degree cone. This cone applies to the front of a HAS as a PES only. Use **Figure 3.4.** to determine HAS exposure boundaries.

3.21. Munitions in Austere Areas. The following "austere area" provisions for explosives storage areas are authorized for use in:

3.21.1. All zones where hostilities exist.

3.21.2. Areas approved by PACAF, USAFE and USCENTAF, where arrangement under paragraph **1.4.** will allow their application.

3.21.2. (PACAF) Austere area provisions are authorized at Osan, Kunsan, Kwang Ju, Suwon, Taegu, Cheong Ju, Sachon, Kimhae, and Kadena Air Bases (see **Attachment 14 (Added)**).

3.21.3. All "bare bases" and "limited bases."

3.21.4. Other areas as may be approved by HQ AFSC/SE.

3.21.5. Normal explosives safety standards, procedures, Q-D criteria, and methods of application in this regulation apply. The exceptions that follow are alternatives to normal criteria and may be used if necessary. Minimum separations should prevent simultaneous detonation of explosives on opposite sides of an approved barricade and minimize the possibility of later, non-simultaneous propagating explosions. Use greater separations where possible.

3.21.6. Open Storage. Open storage is authorized for all HC/D of munitions and explosives. Give priority for cover to items requiring protection from the elements, considering the type packing material involved. Comply with **Table 3.3.** except for separation between open storage sites, pads, and modules (above ground magazines), used solely for the storage of non-mass detonating CBUs in metal containers and/or 20mm and 30mm ammunition in metal containers. Such locations will be separated from each other by a minimum distance of 70 feet for a maximum of 500,000 pounds NEWQD. All other normal Q-D requirements apply.

3.21.7. Avoid single stacks of large quantities of mass-detonating explosives. Smaller stacks may limit losses due to accident or enemy action and often result in decreased land area requirement. Smaller stacks reduce the distance required between the explosives storage area and "outside" exposures, such as flightline areas, inhabited buildings, or bulk POL storage.

3.21.8. When normal aboveground magazine separation is not feasible, use the modular concept of barricaded open storage described in paragraph **3.22.** Large quantities of explosives may be stored in this manner with relative safety.

3.21.9. If land is scarce and covered storage is required, consider the use of approved steel arch, earth-mounded igloos. These sectionalized, corrugated-arch structures allow storage of maximum amounts of mass-detonating explosives with minimum space between igloos. They are available in any practical length in widths up to 30 feet. The common earth cover gives acceptable protection against propagation of an explosion from one igloo to another.

3.21.10. Site tri-service or joint use storage facilities under the standard criteria, DoD 6055.9. However, if operational requirements prescribe, austere area criteria apply to any part of the facility falling directly under Air Force control.

3.22. Module Description and Siting Criteria in Austere Areas. A module is a barricaded area comprised of a series of connected cells with hard surface storage pads separated from each other by barricades (see **Figure 3.5.**).

3.22.1. A light metal shed or other lightweight fire retardant cover may be used for weather protection for individual cells. Heavy structures (reinforced concrete, dense masonry units) or flammable material will not be used.

3.22.2. The maximum NEW permitted to be stored within each cell is 250,000 lbs.

3.22.3. Module cell to module cell separation is K1.1. This is a significant reduction from the K6 barricaded IM requirement. Modules allow the same amount of explosives to be stored using far less land space. However, in the event of an unplanned detonation in an adjacent cell, munitions will be covered with earth and unavailable for use until extensive uncovering operations and possibly maintenance are completed.

3.22.4. Barricades must comply with the appropriate requirements of this chapter. Module barricades must comply with the 2-degree rule in paragraph **3.12.**

3.22.5. To reduce the MCE expected from an explosion in one cell, "buffered" storage arrangements may be used as described in paragraph **3.36.**

3.22.6. CBUs (HC/D 1.2), 20 and 30-mm ammunition, when stored in barricaded facilities, are exempt from meeting the two degree requirement of paragraph **3.12.**

3.22.7. There is no restriction on the arrangement of cells within a module or groups of modules. When explosives stacks are not separated by a barricade, use K11.

3.22.8. An above ground magazine may be considered a module provided all standards applicable to modules are met.

Table 3.16. Intershelter Separation Criteria for Aircraft Survival1 (HC/D 1.1 only).

FROM / PES / TO / ES		TAB VEE or TAB VEE Modified (First Generation Aircraft Shelter)			Second or Third Generation Aircraft Shelter			Ready Service Igloo				Ready Service Magazine		Ready Service Module
		Side	Rear	Front (2)	Side	Rear	Front (2)	Side	Rear	Front Barri-caded	Front Unbar-ricaded	Barri-caded	Unbar-ricaded	Barri-caded
TAB VEE or TAB VEE Modified (1st Generation Aircraft Shelter)	Side	K9	K6	K9	K9	K6	K9	K2.75	K2.75	K8	K8	K8	K8	K8
	Rear	K8	K5	K8	K8	K5	K8	K2.75	K2.75	K8	K8	K8	K8	K8
	Front (2)	K18	K18	K18	K18	K18	K18	K11	K9	K18	K18	K18	K18	K18
2nd or 3rd Generation Aircraft Shelter	Side	K9	K6	K9	K9	K6	K9	K2.75	K2.75	K8	K8	K8	K8	K8
	Rear	K8	K5	K8	K8	K5	K8	K2.75	K2.75	K8	K8	K8	K8	K8
	Front (2)	K11	K9	K18	K11	K9	K18	K2.75	K2.75	K8	K8	K8	K8	K8
TAB VEE Maintenance HAS (See note)	Side	K9	K8	K9	K9	K8	K9	K8	K8	K8	K8	K8	K8	K8
	Rear	K8	K8	K8	K8	K8	K8	K8	K8	K8	K8	K8	K8	K8
	Front (2)	K18	K18	K18	K18	K18	K18	K11	K9	K18	K18	K18	K18	K18
2nd or 3rd Generation Maintenance HAS (See Note)	Side	K9	K8	K9	K9	K8	K9	K8	K8	K8	K8	K8	K8	K8
	Rear	K8	K8	K8	K8	K8	K8	K8	K8	K8	K8	K8	K8	K8
	Front (2)	K11	K9	K18	K11	K9	K18	K8	K8	K8	K8	K8	K8	K8

NOTES:

1. The separation criteria in this table apply only to USAF aircraft and provides minimum protection from blast overpressure only. It is not specifically designed to prescribe survival or protection distances for any other resource. For HC/D 1.2.x fragmentation protection see **Table 3.3.** Note 17.

2. Separations are based on shelter doors remaining closed, except for short periods for aircraft towing, fueling, servicing, run up, or taxi and during integrated combat turnarounds or when maintenance equipment or munitions are being moved into or out of shelters. If doors are left open beyond these short periods apply K30.

   (PACAF) Wing Weapons Safety offices will identify what actions constitute servicing in their supplement to this manual or other local operating instruction.

Table 3.17. Intershelter Separation Criteria To Prevent Simultaneous Detonation[6,7] (HC/D 1.1 only).

TO / FROM PES	ES	TAB VEE or TAB VEE Modified (First Generation Aircraft Shelter)[4]			Second or Third Generation Aircraft Shelter[4]			Korean TAB VEE[4]			Korean Flow thru[4]		Ready Service Igloo				Ready Service Magazine[5] & Flt Line Holding Area		Ready Service Module[5]
		Side	Rear	Front[8]	Side	Rear	Front[8]	Side	Rear	Front[8]	Side	Front & Rear[8]	Side	Rear	Front Barri-caded	Front Unbar-ricaded	Barri-caded	Unbar-ricaded	Barri-caded
TAB VEE or TAB VEE Modified (First Generation Aircraft Shelter)	Side	K2	K2	K2.75	K2	K2	K2.75	K2	K2	K4.5	K2	K4.5	K1.25[1]	K1.25[1]	K2.75[2]	K2.75[2]	K2.75	K2.75	K2.75
	Rear	K2	K2	K2.75	K2	K2	K2.75	K2	K2	K4.5	K2	K4.5	K1.25[1]	K1.25[1]	K2.75[2]	K2.75[2]	K2.75	K2.75	K2.75
	Front	K6	K4.5	K8	K6	K4.5	K9[3]	K6	K4.5	K9[3]	K6	K9	K1.25[1]	K2.75[2]	K6[2]	K9[2]	K6	K9	K6
2nd or 3rd Generation Aircraft Shelter	Side	K2	K2	K2.75	K2	K2	K2.75	K2	K2	K4.5	K2	K4.5	K1.25[1]	K1.25[1]	K2.75[2]	K2.75[2]	K2.75	K2.75	K2.75
	Rear	K2	K2	K2.75	K2	K2	K2.75	K2	K2	K4.5	K2	K4.5	K1.25[1]	K1.25[1]	K2.75[2]	K2.75[2]	K2.75	K2.75	K2.75
	Front	K4.5	K2.75	K5	K4.5	K2.75	K6	K4.5	K2.75	K4.5	K4.5	K4.5	K1.25[1]	K1.25[1]	K2.75[2]	K2.75[2]	K2.75	K2.75	K2.75
Korean TAB VEE	Side	K2	K2	K2.75	K2	K2	K2.75	K2	K2	K4.5	K2	K4.5	K1.25[1]	K1.25[1]	K2.75[2]	K2.75[2]	K2.75	K2.75	K2.75
	Rear	K2	K2	K2.75	K2	K2	K2.75	K2	K2	K4.5	K2	K4.5	K1.25[1]	K1.25[1]	K2.75[2]	K2.75[2]	K2.75	K2.75	K2.75
	Front	K11[3]	K11[3]	K11[3]	K11[3]	K11[3]	K11[3]	K11[3]	K11[3]	K11[3]	K11[3]	K11[3]	K6[2]	K6[2]	K6[2]	K11[2]	K6	K11	K6
Korean Flow Thru	Side	K2	K2	K2.75	K2	K2	K2.75	K2	K2	K4.5	K2	K4.5	K1.25[1]	K1.25[1]	K2.75[2]	K2.75[2]	K2.75	K2.75	K2.75
	Front & Rear	K11[3]	K11[3]	K11[3]	K11[3]	K11[3]	K11[3]	K11[3]	K11[3]	K11[3]	K11[3]	K11[3]	K6[2]	K6[2]	K6[2]	K11[2]	K6	K11	K6
Ready Service Igloo	Side	K2	K2	K2.75	K2	K2	K2.75	K2	K2	K2.75	K2	K2.75	K1.25[1]	K1.25[1]	K2.75[2]	K2.75[2]	K4.5	K4.5	K4.5
	Rear	K2	K2	K2.75	K2	K2	K2.75	K2	K2	K2.75	K2	K2.75	K1.25[1]	K1.25[1]	K2[2]	K2[2]	K4.5	K4.5	K1.25
	Front Barri-caded	K2.75	K2.75	K5	K2.75	K2.75	K6	K2.75	K2.75	K6	K2.75	K6	K2.75[2]	K2[2]	K6[2]	K6[2]	K6	K6	K6
	Front Unbarricaded	K6	K4.5	K8	K6	K4.5	K9	K6	K4.5	K9	K6	K9	K2.75[2]	K2[2]	K11[2]	K11[2]	K11	K11	K6
Ready Service Magazine & Flt Line Holding area	Barri-caded	K2.75	K2.75	K6	K2.75	K2.75	K6	K6	K6	K6	K6	K6	K4.5[2]	K4.5[2]	K6[2]	K6[2]	K6	K6	K6
	Unbarricade	K11	K11	K11	K11	K11	K11	K11	K11	K11	K11	K11	K6[2]	K6[2]	K11[2]	K11[2]	K6	K11	K6
Ready Service Module	Barri-caded	K6	K4.5	K6	K6	K4.5	K6	K6	K6	K6	K6	K6	K1.25[2]	K1.25[2]	K6[2]	K6[2]	K6	K6	K1.1

NOTES:

1. Use K2.75 if the loading density of the igloo exceeds 0.6 pounds NEW per cubic foot of interior volume. Do not exceed the maximum NEW limit of 22,000 lbs.
2. If required, use the separation shown regardless of loading density. Do not exceed the maximum NEW limit of 22,000 lbs in a Ready Service Magazine or a Ready Service Igloo.
3. If required, use K6 if barricaded. Also, see **Table 3.3.**, Note 37 for Combat Aircraft criteria.
4. Do not exceed the maximum NEW limit of 11,000 lbs per shelter.

5. Do not exceed the maximum NEW limit of 22,000 lbs in a Ready Service Magazine or a Ready Service Igloo.
6. For circumstances not covered in this table, refer to **Table 3.3.**
7. This table is the minimum standard authorized for separating HASs containing weapons storage vaults (WSVs) from all other HASs with or without WSVs. HAS to HAS distance in this table still applies when personnel are opening/closing WSVs or performing weapons maintenance operations in HASs, with or without using weapons maintenance trucks (WMTs). The presence of personnel, WSVs, or WMTs (or even a combination of all three) in HASs does not change or negate the applicability of this table. See "occupied" and "unoccupied" facility in the glossary.
8. Separations are based on shelter doors remaining closed, except for aircraft towing, fueling, servicing, run up, or taxi and during integrated combat turnarounds or short periods when maintenance equipment or munitions are being moved into or out of shelters. If doors are left open for extended periods, normal combat aircraft parking area criteria apply out the front.

   (PACAF) Wing Weapons Safety offices will identify what actions constitute servicing in their supplement to this manual or other local operating instruction.

Table 3.18. Separation Distances for Missiles in Aircraft Shelters.

Type of Aircraft Shelter		Intraline/Related Facility Distance (ft)				Public Traffic Route Distance (ft)				Inhabited Building Distance (ft)[7]			
		AIM-7	AIM-9	AGM-65A/B/D		AIM-7	AIM-9	AGM-65A/B/D		AIM-7	AIM-9	AGM-65A/B/D	
				1/LAU	2-3/LAU			1/LAU	2-3/LAU			1/LAU	2-3/LAU
TAB VEE and TAB	Front	50[1]	40[1]	80[1]	300[2]	90[4]	65[4]	240[4]	300[4]	150[8]	110[8]	400[5]	500[5]
VEE/Modified (First Generation	Side	0	0	0	300[2]	0	0	165[4]	300[2]	0	0	275[6]	395[3]
A/C Shelter	Rear	0	0	0	300[2]	0	0	105[4]	300[2]	0	0	175[6]	300[2]
Second and Third	Front	50[1]	40[1]	80[1]	300[2]	90[4]	65[4]	240[4]	300[4]	150[8]	110[8]	400[5]	500[5]
Generation Aircraft Shelter	Side	0	0	0	300[2]	0	0	165[4]	300[2]	0	0	275[6]	295[3]
	Rear	0	0	0	300[2]	0	0	105[4]	300[2]	0	0	175[6]	300[2]
Korean Flow Thru	Front & Rear	50[1]	40[1]	80[1]	300[2]	420[4]	240[4]	240[4]	300[4]	700[5]	400[5]	400[5]	500[5]
	Side	0	0	0	300[2]	0	0	165[4]	300[4]	0	0	275[6]	395[3]

NOTES:

1. Based on K18 for the NEW of one missile.
2. Based on minimum HAS fragment distance.
3. Based on K62 for NEW of 3 missiles per launcher. For 2 per launcher, use 345 feet.
4. Based on 60 percent of IBD.
5. Based on minimum fragment distance.
6. Based on K62 from the side or K40 from the rear.
7. Also applies to other facilities or locations requiring IBD separation.
8. Base on K50 for the NEW of one missile. For AIM-7M with WAU-17 warhead, use 165 feet for a single warhead, 205 feet for two warheads in radial alignment, and 235 feet for three warheads in radial alignment.

Figure 3.4. Hazard Zones for Hardened Aircraft Shelters and Igloos.

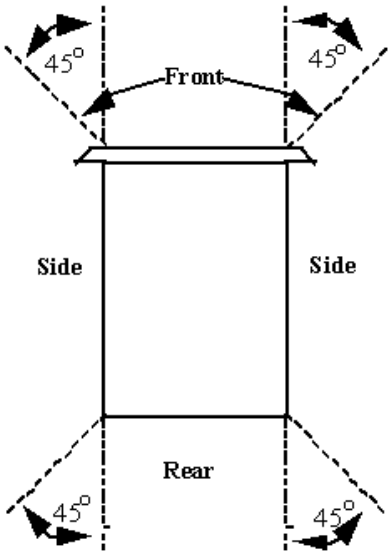

HAS as an Exposed Site (ES)

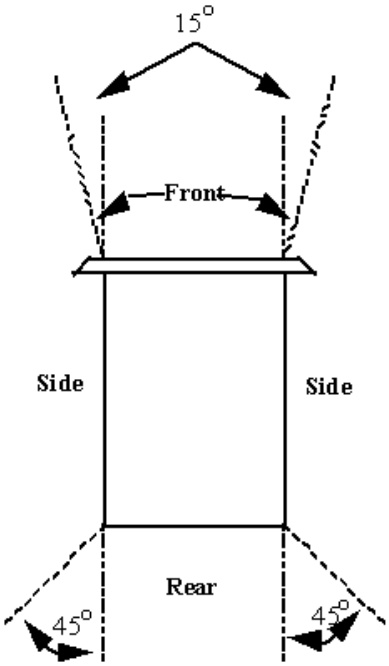

HAS as a Potential Explosion Site (PES)

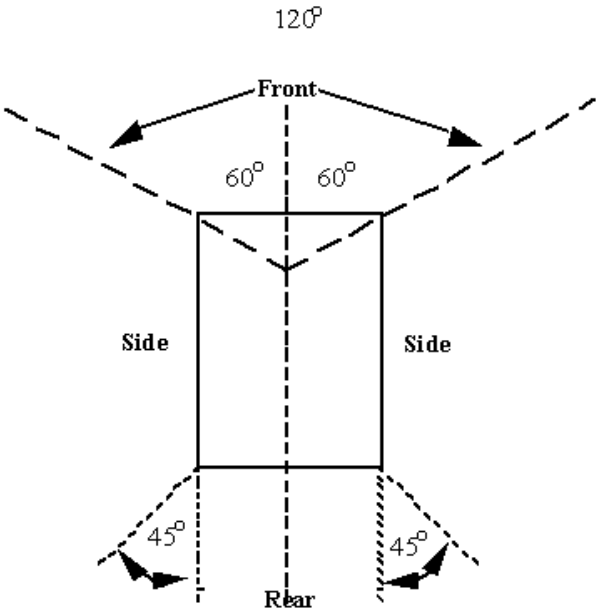

Igloo as an ES or PES

Figure 3.5. Typical Eight Cell Module.

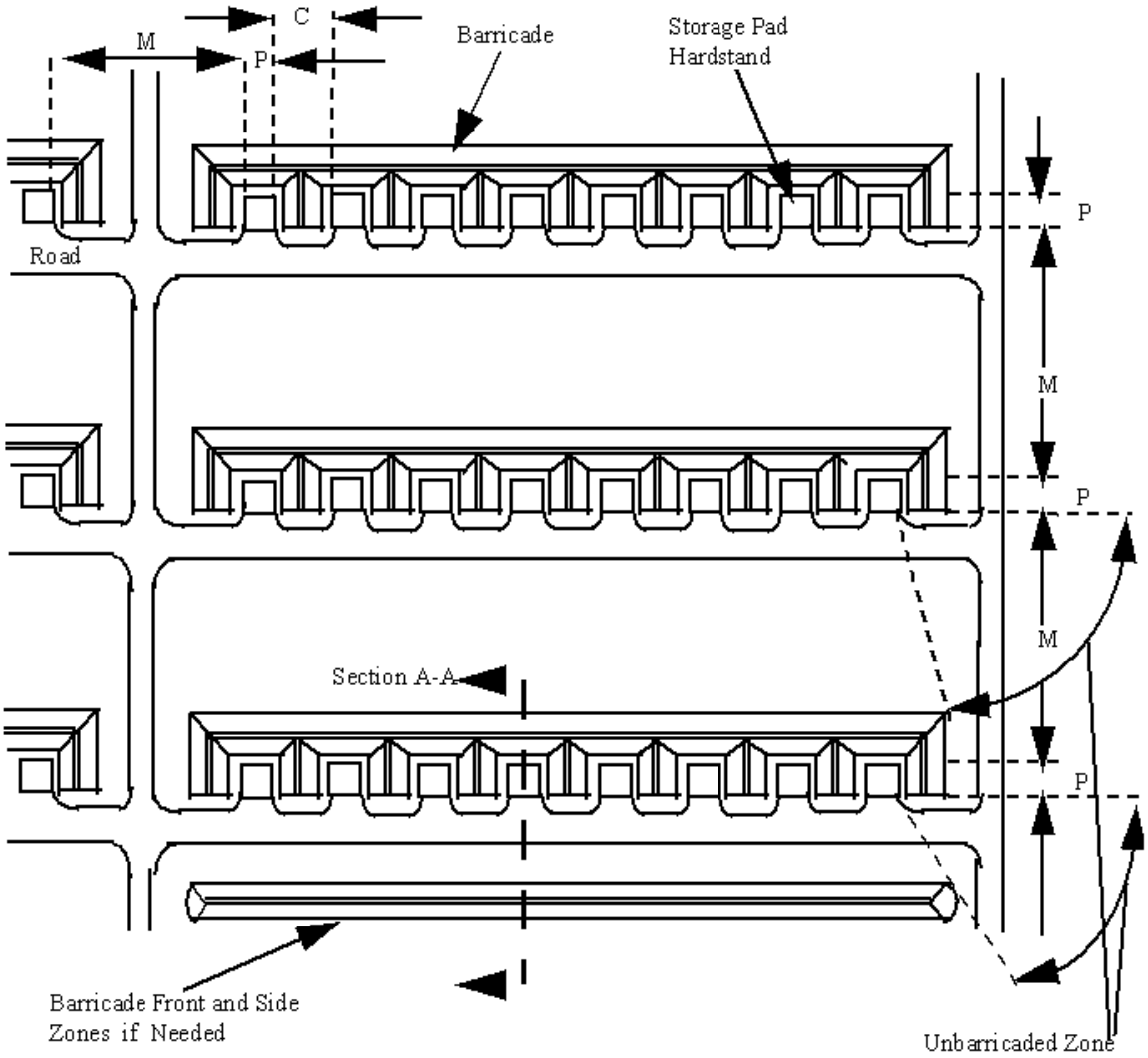

Typical Eight Cell Module
Number of Cells, Cell Explosives Weights,
Pad Size (P), and Distances Between Cells (C)
and Modules (M) Vary.

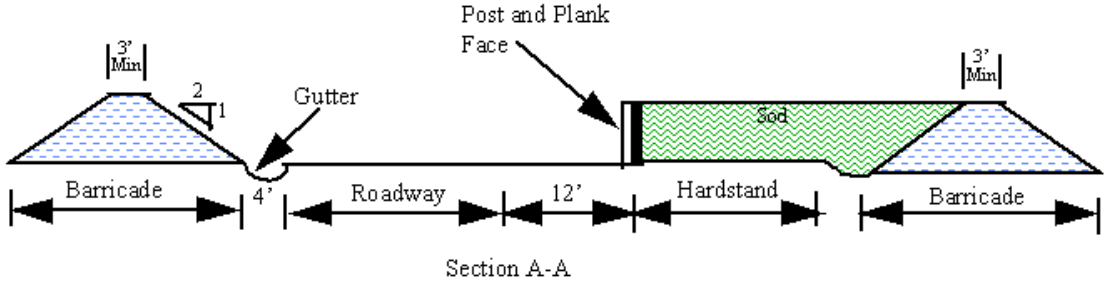

3.23. Modular Storage Restrictions. The Q-D relief for using module storage is predicated on the measures taken to minimize the risk of fire and the throwing of firebrands in the event of an unplanned explosion.

3.23.1. Other than dunnage to support munitions containers, no wood or other flammable materials are allowed in a module.

3.23.2. Stocks are limited to HE bombs, (fuzed or unfuzed, with or without fins), and the following contained in nonflammable or metal shipping containers: 30mm and smaller ammunition, CBUs, inert munitions components, and HC/D 1.4 munitions. Do not store HC/D 1.3 munitions in modules.

3.23.3. Limit stocks in each module cell to one type of item in the standard shipping configuration unless mixed storage is authorized by the MAJCOM. Mixed storage of high-explosive bombs and CBUs present an extreme fragment hazard and should be avoided.

3.23.4. Combustible dunnage or other flammable material shall not be stored in or within 100 feet of modules.

3.24. Reserved For Future Use.

3.25. Combat Aircraft, Explosives-Loaded Aircraft, Airfield Areas, and Related Support Facilities. Parked explosives-loaded aircraft must comply with minimum airfield criteria in AFMAN 32-1123 (I), *Airfield and Heliport Planning and Design* and AFH 32-1084, *Facility Requirements.*

3.25.1. Forward Firing Munitions. Weapon systems such as guns, rockets, missiles, and flare dispensers pose an additional hazard because of their directional response and potential long range if inadvertently activated on the ground. Position aircraft to present the minimum hazard to personnel and resources in the event of a mishap. Don't unnecessarily stand or park vehicles in front of, or behind, these munitions when power is applied to the aircraft. Comply with AFI 91-101 for PNAF missions.

3.25.2. Airfield Explosives-Prohibited Areas. Explosives, explosive facilities, and parked explosives-loaded aircraft will be excluded from Runway Clear Zones and Accident Potential Zones I and II. For rotary wing aircraft, do not site explosives or activities involving explosives within the Landing Lane Clear Zone and Accident Potential Zone. For further details, see AFMAN 32-1123 (I), *Airfield and Heliport Planning and Design,* AFI 32-7063, *Air Installation Compatible Use Zone Program,* and AFH 32-7084, *AICUZ Program Managers Guide.*

3.25.2. (PACAF) An approved airfield waiver must be submitted when siting any explosives within an Airfield Explosives-Prohibited Zone. Reference United Facilities Criteria (UFC) 3-260-01, *Airfield and Heliport Planning and Design*.

3.25.3. Q-D separation requirements for explosives-loaded aircraft and related facilities are shown in **Table 3.3.**

3.25.4. EXCEPTION: Aircraft configured with the items listed below are exempt from Q-D site planning requirements when evaluated as a PES. This does not include ammunition and explosives carried as cargo. Park in a designated aircraft parking area meeting airfield criteria and treat the aircraft as explosives-loaded in all other respects. The following munitions can be uploaded and downloaded at the designated aircraft parking area provided that the quantity of munitions being loaded or unloaded is limited to a single aircraft load. Munitions delivery trailers (i.e., UALS, BDU, flare & chaff mods, captive-carry missiles) are considered in the transportation mode (QD-exempt) provided the trailers

do not remain at the designated aircraft parking area longer than the loading/unloading operation being conducted.

3.25.4.1. Internal gun ammunition 30 mm or less of HC/D (04) 1.2 or HC/D 1.2.2.

3.25.4.2. HC/D 1.3 Installed Aircraft Defensive Flares. Externally loaded munitions such as LUU-1/2 flares and 2.75" training rockets require Q-D.

3.25.4.3. HC/D 1.4 munitions (i.e., chaff squibs, captive-carry training missiles, BDU-33s).

3.25.4.4. Installed explosives necessary for safe flight operations. See glossary and TO 11A-1-33 for further information.

3.25.5. Uploading and downloading of munitions will be conducted in explosives sited aircraft parking areas with the exceptions listed in paragraph **3.25.4.** and its subparagraphs.

3.26. Aircraft Battle Damage Repair Sites. The maximum NEW charge permitted is 2 ounces of HC/D 1.1. When using sandbags to cover charges and prevent fragment escape, a 300-feet clear zone is required. For un-sandbagged charges, a 500-feet clear zone is necessary.

3.27. Planned Detonation or Burns. The planned detonation or burning of explosives requires more stringent safety distances. If the minimum separation distance requirements for previously approved DDESB sitings or those prescribed in the subparagraphs below cannot be met, then personnel shall be provided equivalent protection. This equivalent protection may include, but is not limited to, the construction of barricades or other protective structures. Forward design information (including sketches, lists of materials to be used, and dimensions) or other proposed mitigation procedures through command channels to AFSC/SE for approval. If no equivalent protection can be put into effect, apply for the appropriate category of exception IAW **Chapter 5** of this manual. Select and operate the destruction site based on the types of munitions involved and the criteria outlined below:

3.27. (PACAF) Develop local written procedures in accordance with AFMAN 91-201 paragraph **2.3.**, for all demonstrations involving explosives (i.e. air shows) and forward to PACAF/SEW and PACAF/CEX for approval at least 30 days prior to the demonstration. If the airfield requirements in paragraph **3.25.2.** are not meet, units must process a waiver request in accordance with UFC 3-260-01.

3.27.1. Disposal, demonstrations, and EOD Operations using detonation.

3.27.1.1. Use the following criteria from the detonation site for all locations involving personnel that are not essential to the planned detonation, also, for non-explosives related facilities, locations with exposed aircraft and open storage explosives sites.

3.27.1.1.1. K328 (1,250 feet minimum) for non-fragmenting explosive materials.

3.27.1.1.2. K328 (2,500 feet minimum) for fragmenting explosives.

3.27.1.1.3. K328 (4,000 feet minimum) for bombs and projectiles with a caliber exceeding 5 inches. Heavy fragments such as the base plate and lugs may travel further than 4,000 feet. These fragmenting munitions will be buried or covered with a minimum of 4 feet of earth cover (in every direction) or double the required distance to ensure against fragment damage. (See paragraph **3.27.** above.)

3.27.1.1.4. Check environmental compliance and Resource Conservation and Recovery Act (RCRA) requirements and permits for this operation. For overseas locations, check Status of

Forces Agreement and/or applicable technical agreements for any applicable environmental protection requirements.

3.27.1.2. Use the following criteria from the detonation site for all locations involving personnel that are essential to the planned detonation, as well as, for buildings or igloos storing explosives and above ground utilities.

3.27.1.2.1. K105 (500 feet minimum) for non-fragmenting explosive materials.

3.27.1.2.2. K105 (500 feet minimum) for fragmenting explosive materials. Provide a personnel shelter that offers fragment-proof overhead and frontal protection, or double the required distance to ensure against fragment damage or personnel injury.

3.27.1.2.3. If the minimum personnel protection distances from the detonation site are not available construct a personnel shelter that will provide protection from the expected psi and fragment hazards for the types of munitions used. Locate it at least 300 feet from the disposal site. Obtain shelter design approval from AFSC/SE prior to construction.

3.27.1.3. On-site authorities designate essential personnel and determine minimum distance for non-explosives facilities and equipment.

3.27.1.4. Control sites for planned detonations must be at least intraline distance from other PESs based on the PES NEW.

3.27.1.5. For underground utilities, a minimum protection factor of K18 (100 feet minimum) is required.

3.27.1.6. For quarry and building demolition operations, a minimum protection factor of K328 is required.

3.27.2. Disposal, demonstrations, and EOD Operations using burning**.**

3.27.2.1. Burning HC/D 1.3 materials can generate significant internal pressures. Some HC/D 1.3 materials can undergo a transition from a deflagration to a detonation, in which case the effects are virtually identical to the detonation of conventional high explosives (HC/D 1.1). For information on these items, contact the item manager.

3.27.2.2. From burning areas to all locations involving personnel that are not essential to the planned burn, or for non-explosives related facilities apply K40 (1,250-foot minimum).

3.27.2.3. From burning areas to explosives operating locations not related to the burn and locations with exposed aircraft, apply incremental K40.

3.27.2.4. When powder trains or squibs are used to initiate a burn, apply incremental K24 from burning areas to all locations involving personnel that are essential to the planned burn, or facilities storing explosives and above ground utilities.

3.27.2.5. When blasting caps or other HC/D 1.1 explosives are used to initiate the burn, apply incremental K40 from burning areas to all locations involving personnel that are essential to the planned burn, facilities storing explosives and above ground utilities.

3.27.2.6. Use the NEW of the explosives at the burning area. Apply K18 from PESs to burning areas.

3.27.2.7. Control sites for planned burns must be at least intraline distance from other PESs based on the PES NEW.

3.27.2.8. Locate burning kettles at least 300 feet from inhabited buildings, public transport routes, and the base boundary. Separate from other explosives facilities by 300 feet or intraline distance, whichever is greater.

3.27.3. Static Test Firing Propellant Loaded Items.

3.27.3.1. Using the total NEW of the propellant, site static test locations using incremental K40, minimum 300 feet, distance to potential explosive sites and to locations where there are non-essential personnel and operations. Maintain a minimum of 50 feet from the non flame exposure area and 300 feet from the flame exposure area to related non-explosive exposed sites, unless an engineer analysis shows a lesser distance is adequate. The flame exposure area is 45 degrees on either site of the flame exit nozzle or port.

3.27.3.2. Test authorities designate essential personnel. Provide these personnel with protection as required in paragraph **2.82.**

3.28. Explosive Ordnance Disposal (EOD) Training.

3.28.1. Proficiency Ranges. Because the quantity of explosives required to maintain EOD proficiency is small, criteria for an EOD training range are not as stringent as required for actual disposal operations. Limit EOD training ranges to a maximum of 5 pounds of demolition explosives. Use only non-fragmenting charges (Boot Banger, bare C-4, Conical Liquid Follow Through, etc.), shaped charges (Mk 7 series, Mk 2, flex linear etc) explosive powered tools (Mk-2 dearmer, Percussion Actuated Non-electric Disruptor, etc). Explosively formed penetrators including but not limited to the Mk 23, Mk 24, and Mk 788 Main Charge Disruptor are not authorized for use. When siting these ranges, as an ES use incremental PTR distance from other PES based on the NEWQD of the other PESs. Construct and site as follows:

3.28.1.1. Locate the destruction point at least 500 feet from all above-ground facilities (including public highways, base boundaries, runways, taxiways, parking aprons and any PES). Maintain at least 100 feet from underground utilities.

3.28.1.2. Construct a barricade within 10 feet of the destruction point to control ejection of debris. Make it the equivalent of two sandbags thick and at least 6 feet high.

3.28.1.3. The barricade must have two entrances (on opposite sides of enclosure), each with a barricade equivalent to two sandbags thick and long enough to effectively block all fragments and blast.

3.28.1.4. If the destruction point can't be at least 500 feet from facilities locate at 300 feet and limit to 2.5 pounds of demolition explosives, or 200 feet and 1.25 pounds.

3.28.1.5. If using the training range for operations that will produce fragments above the level expected for normal EOD proficiency training (normally open shots), meet the requirements of paragraph **3.27.** and TO 11A-1-42, Section I.

3.28.1.6. If EOD training is done using explosively operated tool kits, reduce range distance to 100 feet. Barricade and use only inert bombs and fuzes.

3.28.1.7. If the proficiency training range is located on an existing disposal range and meets separation distance from the detonation point to the perimeter of the disposal range in accordance with the requirements listed in TO 11A-1-42, section 1, then barricades identified in paragraph **3.28.1.2.** are not required.

3.28.2. EOD proficiency ranges may be used for burning operations for cased ammunition if the following conditions are met:

3.28.2.1. Observe guidance provided in TO 11A-1-42 and this chapter to ensure personnel safety and fire prevention.

3.28.2.2. Barricade and cover pit, trench, and furnace operations to prevent fragment scatter.

3.28.2.3. Check environmental compliance and Resource Conservation and Recovery Act (RCRA) requirements and permits for this operation.

3.28.3. EOD personnel may use procedures with explosively propelled liquids, shots, gases, slugs, or heat at off-range locations on military installations in support of unit training, inspections, and evaluations. EOD teams may use the following tools:

3.28.3.1. MK 1 Remote Wrench.

3.28.3.2. MK 2 .50 Dearmer.

3.28.3.3. MK 31 Jet Remote Opening Device (JROD).

3.28.3.4. Improvised Dearmer.

3.28.3.5. MK 2/MK VIA Robotic Vehicle (with shotgun).

3.28.3.6. Stand-off disrupter.

3.28.3.7. Stand-off dearmer.

3.28.4. Procedures: Use only the explosives items listed below for off-range unit training, inspection and evaluation operations. Quantities shown are the maximums authorized for each inspection or evaluation scenario.

3.28.4.1. Two .50 caliber impulse cartridges.

3.28.4.2. Two .50 caliber ball, M2 cartridges (projectile extracted).

3.28.4.3. Two electric or non-electric blasting caps.

3.28.4.4. Twenty feet of standard detonating cord (DODIC M456).

3.28.4.5. Thirteen feet of safety fuse.

3.28.4.6. Two M60 fuse lighters.

3.28.4.7. Three AN-M14 thermite grenades.

3.28.4.8. Five 12 gauge shotgun shells (***Note****: Do not use 00 buckshot at off-range locations. When using # 7 1/2 shot, ensure a safe distance for shot travel*).

3.28.4.9. Five stand-off disrupter blank cartridges.

3.28.4.10. Shock Tube as required.

3.28.4.11. (Added-PACAF) Five each Electric Matches

3.28.4.12. (Added-PACAF) Use plaster or Avon slugs that will disintegrate upon impact.

3.28.5. Authorized Operations. Under the following conditions, EOD personnel may conduct off-range operations using the tools, explosives, and procedures described in paragraph **3.28.4.** without the use of barricades (see paragraph **3.28.1.**, for information on operations using barricades).

3.28.5.1. Coordinate specific location with the installation weapons safety office, prior to the operation.

3.28.5.2. Make proper notifications concerning anticipated noise.

3.28.5.3. Do not locate the operation in an explosives prohibited zone.

3.28.5.4. Evacuate personnel to the applicable withdrawal distances required for an actual situation.

3.28.5.5. Place a minimum of three filled sand bags in front and behind tools that project slugs, fluids or shot to limit directional force.

3.28.5.6. Use only slugs made of plaster, which will disintegrate on impact.

3.28.5.7. Select an area free of all fire hazards and use only inert training ordnance as a target.

3.28.5.8. When operating tool sets inside a building, take positive measures to prevent secondary or collateral damage.

3.29. Petroleum, Oil, Lubricant (POL).

3.29.1. Operating quantities of POL or other hazardous material that support explosives operations do not require Q-D separation but will comply with National Fire Protection Association (NFPA) Standard 30, Flammable and Combustible Liquids Code.

3.29.2. Separate parking areas for fuel service trucks by IL distance. Parking area for fuel service trucks unrelated to the PES, use IBD.

3.29.3. There must be at least 100 feet between explosives and any mobile petroleum dispensing unit operating in an explosives area, except where a shorter distance is needed during transfer operations to an underground tank located at less than 100 feet or where needed to refuel a mobile explosives transporter (such as the environmental control unit for the LGM-30) with the load aboard.

3.29.4. Liquid petroleum (LP) gas tanks must meet the requirements of this section for like quantities of fuel and explosives of the various divisions.

3.29.5. Except for special situations described below, use **Table 3.3.** for separations from explosives locations or explosives loaded aircraft to more than 5,000 gallons of POL bulk storage, railroad tank car and transfer points/operations, tank trucks, POL transmission pipelines, and hydrants. Fuel truck transfer points/operations may be separated by incremental (K24/30) PTR distance if the trucks are limited to less than 48 hours at the location. Keep pumps/pump houses serving underground POL at least 50 feet from explosives locations. If required fire distances in NFPA Standard 30 are greater than those in this manual, use the greater distance.

3.29.5.1. POL tanks that are on/above ground surface, are supplied by trucks, underground lines or aboveground lines that have automatic shutoffs, and service only an explosives operating area or multiple PESs of all types may be sited at incremental (K40/50) IB, 400 feet minimum, from supported PESs. The tanks must have a dike system meeting the requirements of NFPA Standard

30. MAJCOM accepts possible loss or collateral damage if fragments puncture the tank and cause a fire.

3.29.5.2. Above or underground POL tanks servicing a single PES or a single ES within the explosives clear zone do not require Q-D separation but will comply with NFPA Standard 30.

3.29.5.3. (Added-PACAF) Keep aboveground pipelines that serve pump/pump houses at NFPA standard.

3.29.6. EXCEPTIONS: The following are exempted from Q-D requirements:

3.29.6.1. Explosives loaded aircraft to POL hydrants set on the flightline flush with the pavement.

3.29.6.1. (PACAF) Fixed POL pantograph systems attached to hydrants do not require Q-D separation. These systems have "dead-man controls" and other features that prevent fuel discharge in a mishap event.

3.29.6.2. Ammunition and explosives to in use material-handling equipment.

3.29.6.3. Licensed locations to POL facilities.

3.30. Liquid Propellants. General Information:

3.30.1. These criteria are minimum requirements for all Air Force installations where liquid propellants are present. This includes liquid and gaseous substances used for propulsion of missiles, rockets, and other related devices.

3.30.2. These criteria do not apply to:

3.30.2.1. Liquid propellant manufacturing facilities.

3.30.2.2. Prepackaged liquid propellant units when installed as components of weapon systems having assigned storage compatibility and explosives classifications.

3.30.2.3. A single, minimum-size standard shipping container of a given propellant. This container may be one 55-gallon drum or one 500-pound net weight cylinder. Such containers will be stored in the normal manner prescribed for the commodity.

3.30.2.4. One nonstandard container with lesser quantities than **3.30.2.3.** above.

3.30.2.5. Hydrocarbons and other liquid fuels, or substances used as fuels or propellant, will be considered as propellants when it is used in a missile system, rocket, ammunition or weapon subsystem.

3.30.3. When storage involves other explosives (solid) or explosive items, the Q-D criteria for those hazards, together with the criteria for the liquid propellant, will be used.

3.30.4. These criteria do not consider toxic hazards. If the toxic hazard is a controlling factor in siting and storing a liquid propellant, it should be considered along with explosives hazards when a site plan is prepared.

3.30.5. The MAJCOM developing a liquid propellant (or first adopting for use any liquid propellant not listed here) must recommend the hazard classification and compatibility group designation. The responsible MAJCOM will forward substantiated proposals for such assignments as soon as systems application planning allows or warrants to HQ AFSC/SE.

3.30.6. Determining the Propellant Quantity to Consider in Calculating Required Separation:

3.30.6.1. The NEW of a propellant is the total quantity of the propellant in a tank, drum, cylinder, or other container. When storage containers are not separated from each other by required distances, calculate the quantity of propellant on the basis of the total contents of all such storage containers. Propellant in related piping must be included to the point that positive means have been provided for interrupting the flow in the event of a mishap.

3.30.6.2. Where incompatible propellants are not separated by the required distances, or provisions are not made to prevent their mixing, the combined quantity of the two will be used. Consult **Table 3.19.** to see if high-explosives equivalents apply.

3.30.6.3. When quantities of propellants are given in gallons, **Table 3.20.** will be used to find the quantity in pounds.

3.30.7. Measuring Separation Distances to Exposures:

3.30.7.1. Measure the distance from the closest point of all hazard sources (containers, buildings, or positive cut-off points in piping). The source requiring the greatest distance will be the controlling factor. See **3.30.9.8.** below for pipelines.

3.30.7.2. When buildings containing a propellant in cylinders or drums are effectively subdivided, measure distances from the nearest container or the separate subdivision of containers requiring the greatest separation.

3.30.8. Hazard and Compatibility Storage Groupings:

3.30.8.1. Liquid propellants may be hazards of various types and degrees (**Table 3.21.**). The following groups are based on these hazards:

3.30.8.2. Group I. Relatively Low Fire Hazard (**Table 3.22.**). These materials are the least hazardous. They have, or may develop, a fire hazard potential requiring some separation.

3.30.8.3. Group II. Fire Hazard (**Table 3.22.**). These materials are strong oxidizers, subject to rapid combustion. When they come in contact with certain materials, such as organic matter, these propellants present a serious fire hazard. Therefore, storage facilities are prescribed, on the basis of quantities involved, to minimize property loss.

3.30.8.4. Group III. Fragment and Deflagration Hazard (**Table 3.22.**). Storage containers of these materials may rupture in a fire or deflagration or there may be a vapor phase explosion. Either the pressure rupture or vapor phase explosion can cause a fragment hazard from the container, its protective structure, or adjacent material.

3.30.8.5. Group IV. Detonation Hazard (**Table 3.23.**). These materials present the same hazard as mass-detonating explosives. They create air blast overpressure as well as severe fragment hazards from containers and surrounding equipment and material.

3.30.9. Since the hazards differ in each of the above groups, the predominant hazard of a propellant can vary with the storage location and the operation involved. In determining safety criteria and separation distances, consider the following conditions:

3.30.9.1. Range Launch Pads. Range launch pads involve research, development, test, and space exploration launches. The closeness of fuel and oxidizer to each other makes these operations hazardous. Launch vehicle tanks are also involved. High-explosives equivalents must be used.

3.30.9.2. Operational Launch Pads. Activities at operational launch pads are similar to those at range launch pads. Launch vehicle tanks are involved at these locations. High-explosives equivalents must be used for all quantities of incompatible propellants that could possibly become mixed in the event of a mishap. When an operational launch pad is used for training launches, it will be considered a range launch pad.

Table 3.19. Liquid Propellant TNT Equivalents.

Propellant Combinations (1)	Static Test Stands (2)	Range Launch (2)
LO_2 /LH_2 or B_5H_9 + an oxidizer	Note 5	Note 5
LO_2 /LH_2 + LO_2 /RP-1	Sum of (60% for LO_2 /LH_2)+ (10% for LO_2 /RP-1)	Sum of (60% for LO_2 /LH_2)+ (20% for LO_2 /RP-1)
LO_2 /RP-1 or LO_2 /NH_3 or B 5 H_9 + a fuel	10%	20% up to 500,000 pounds plus 10% over 500,000 pounds
IRFNA/Aniline (3)(4)	10%	10%
IRFNA/UDMH (3) (4)	10%	10%
IRFNA/UDMH + JP-4 (3)(4)	10%	10%
N_2O_4 /UDMH + N_2H_4 (3)(4)	5%	10%
N_2O_4 /UDMH + N_2H_4 + solid propellants (3)(4)	5% plus the explosive equivalent of the solid propellants	10% plus the explosive equivalent of the solid propellant
Tetranitromethane (alone or in combination)	100%	100%
Nitromethane (alone or in combination)	100%	100%

NOTES:

1. Basis of the table. Developed by the Department of Defense Explosives Safety Board Working Group on Explosives Equivalents for Liquid Propellants. Tetranitromethane and nitromethane are Hazard Group IV propellants and are known to be detonable. The net weight of all nonnuclear mass-detonating explosives involved in any configuration, including components of nuclear items, will be added to the above equivalencies, where applicable, in determining required separations. See paragraph **3.30.5.** concerning equivalents for combinations other than shown above.

2. The percentage factors used for the explosives equivalencies of propellant mixtures at launch pads and static test stands were based on such propellants located aboveground and unconfined except for their tankage. Other configurations will be considered on an individual basis to determine applicable equivalencies. MAJCOMs concerned will submit substantiated recommendations to HQ AFSC/SE, together with, or in the same manner as, site plans for new facilities under **Chapter 4**.

3. These are hypergolic combinations. Fuel and oxidizers that will ignite with each other.

4. Substitutions. Alcohols or other hydrocarbons substitute for RP-1; H_2O_2, F, BrF_5, CLF_3, OF_2, or O_3F_3 substituted for LO_2, Monomethylhydrazine substituted for hydrazine or

unsymmetrical dimethylhydrazine (UDMH), or ammonia substituted for any fuel where hypergolic combination results.

5. For siting launch vehicles and static test stands, the explosives equivalent weight is the larger of:
    a. The weight equal to $8W^{2/3}$ where W is the weight of the LO2/LH2, or
    b. 14 percent of the LO2/LH2 weight.

For these calculations, use the total weight of LO2/LH2 present in the launch vehicle, or the total weight in test stand run tankage and piping for which there is no positive means to prevent mixing in credible mishaps. When it can be reliably demonstrated that the maximum credible event involves a lesser quantity of propellant subject to involvement in single reaction, the lesser quantity may be used in determining the explosive equivalent yield. When siting is based on a quantity less than the total propellant present, the maximum credible event and associated explosive yield analysis must be documented in an approved explosives site plan.

Table 3.20. Factors For Converting Gallons of Propellant into Pounds.

Item	Pounds per Gallon	At Temperature of
Anhydrous ammonia	5.1	68
Aniline	8.5	68
Bromine pentafluoride	20.7	68
Chlorine trifluoride	15.3	68
Ethyl alcohol	6.6	68
Ethylene oxide	7.3	68
Fluorine (liquid)	12.6	-306
Furfuryl alcohol	9.4	68
Hydrocarbon fuel JP-4	6.35	60
Hydrocarbon fuel JP-5	6.84	60
Hydrogen peroxide (90 percent)	11.	68
Hydrazine	8.4	68
Isopropyl alcohol	6.6	68
Liquid hydrogen	0.59	-423
Liquid oxygen	9.	-297
Methyl alcohol	6.6	68
Mono methyl hydrazine	7.3	68
Monopropellant NOS-58-6	9.46	68
Nitromethane	9.5	68
Nitrogen tetroxide	12.1	68
Otto fuel	10.5	77
Oxygen difluoride	12.7	-229
Ozone difluoride	14.6	-297
Pentaborane	5.2	68
Perchloryl fluoride	12.0	68
Red fuming nitric acid (IRFNA)	12.5	68
RP-1	6.8	68
Tetranitromethane	13.6	78
Triethyl Boron B	5.8	73
UDMH	6.6	68
UDMH/hydrazine	7.5	68

Table 3.21. Propellant Hazards and Compatibility Groups.

Propellant	Hazard Group (1)	Storage Group (2)
Alcohols CH_3OH, C_2H_5OH, $(CH_3)_2CHOH$	I	C
Anhydrous Ammonia NH_3	I	C
Aniline $C_6H_5NH_2$	I	C
Hydrocarbon Fuels JP-4, JP-5, RP-1	I	C
Monopropellant NOS-58-6	I	C
Nitrogen Tetroxide N_2O_4	I	A
Otto Fuel II	I	G
Red Fuming Nitric Acid HNO_3	I	A
Bromine Pentafluoride BrF_5	I I	A
Chlorine Trifluoride ClF_3	I I	A
Hydrogen Peroxide Greater than 52% H_2O_2	I I (3)	A
Liquid Fluorine LF_2	I I	A
Liquid Oxygen LO_2	I I	A
Perchloryl Fluoride CLO_3F	I I	A
Oxygen Difluoride OF_2	I I	A
Ozone Difluoride O_3F_2	I I	A
Ethylene Oxide C_2H_4O	I I I	D
Hydrazine N_2H_4	I I I	C
Hydrazine-UDMH Mixtures	I I I	C
Liquid Hydrogen LH_2	I I I	C
Mixed Amine Fuels	I I I	C
Monomethylhydrazine CH_3NHNH_3	I I I	C
Pentaborane B_5H_9	I I I	D
Triethyl Boron $B(C_2H_5)_3$	I	D
UDMH $(CH_3)_2NNH_2$	I I I	C
Nitromethane CH_3NO_2	IV (4)	F
Tetranitromethane $C(NO_2)_4$	IV	F

NOTES:

1. The toxic hazard may be an overriding consideration. Consult Bio-environmental personnel to determine toxicity and safety requirements.
2. If the propellants can be stored together without increasing the hazards, they are assigned the same compatibility group letter. Propellants with unlike letters are incompatible for storage. The prefix "Liq" is used here to distinguish liquid propellant groups from the groups listed in paragraph **2.42.** Do not mix liquid compatibility storage groups with other explosives storage groups. Groups F and G have been added.
3. Under certain conditions, concentrated hydrogen peroxide greater than 74 percent can detonate.

4. Although nitromethane is chemically compatible with Liq-C propellants, it is assigned to a separate group because of explosives hazard differences. Group F has been added to provide the required degree of safety under the circumstances.

3.30.9.3. Static Test Stands. These units remain static and are subject to better control than obtainable in paragraphs **3.30.9.1.** and **3.30.9.2.** above. To reduce the hazard related to rockets or missiles on launch pads, tanks may be separated (except fuel and oxidizer tanks that are mounted one above the other). High-explosives equivalents must be used for all quantities of incompatible propellant that could possibly become mixed in the event of a mishap. The hazards from properly separated "run tanks" (operating tanks) and piping are generally the hazards for the materials they contain. This does not apply if the materials are incompatible and may become mixed. If the materials are subject to mixing, use high-explosives equivalents.

3.30.9.4. Ready Storage. This storage is close to launch and static test stands, but it is not usually directly involved in feeding the engine. If the facility is designed to prevent mixing fuels and oxidizers or initiation of a detonation in or on nearby facilities, it presents Group I through III hazards. However, if positive measures cannot be taken to prevent mixing of fuel and oxidizer or to prevent the propagation of a detonation, use high-explosives equivalents.

3.30.9.5. Cold-Flow Test Operations. These present only fire and fragment hazards if the system is airtight, fuels and oxidizers are never employed concurrently, each commodity has a completely separate isolated system and fittings to positively prevent intermixing, and the propellants are of required purity. Otherwise, use high-explosives equivalents.

3.30.9.6. Bulk Storage. This is the most remote storage. It is never directly connected to any launch or test operation. It consists of the area, tanks, and other containers. It includes the tanks and containers used to hold propellant for supplying ready storage and, indirectly, run tanks where no ready storage is available. It generally presents fragment hazards. However, if positive measures cannot be taken to prevent mixing of fuel and oxidizer or to prevent propagation of a detonation, use high-explosives equivalents.

3.30.9.7. Rest Storage. This resembles bulk storage. It is a temporary parking location for barges, trailers, tank cars, and portable tanks used for topping operations (when not engaged in topping operations). It includes parking locations for such vehicles when they are unable to empty their cargo promptly into proper storage containers. Fire and fragment hazards govern. A transporting vehicle becomes a part of the storage container to which it is attached during propellant transfer.

3.30.9.8. Transfer Pipelines. These present minimum hazards when used to transfer Group I through III propellants between unloading points and storage areas or between storage areas and points of use. Group IV material is generally too hazardous to be moved any significant distance through such lines. Short fill, drain, or feeder lines that are part of a system are not considered "transfer pipelines" within the meaning of this paragraph. The following apply to transfer pipelines:

Group I. No minimum Q-D has been set up. Give normal fire protection for each pipeline site.

Groups II and III. Keep at least 25 feet between the pipeline and inhabited buildings. Give normal fire protection for each pipeline site.

Group IV. Considered as mass detonating. It is generally considered too hazardous to trans

port by pipeline. However, if the line is designed to carry the material, apply the criteria in **Table 3.23.**

3.30.9.9. Liquid propellants used for propulsion or operation of missiles, rockets, and other related devices are assigned to hazard groups and compatibility storage groups.

3.30.10. Tables of Distances:

3.30.10.1. Group I. Relatively Low Fire Hazard. **Table 3.22.** applies.

3.30.10.2. Group II. Fire Hazard. **Table 3.22.** applies.

3.30.10.3. Group III. Fragment and Deflagration Hazard. **Table 3.22.** applies.

3.30.10.4. Group IV. Detonation Hazard (100 percent high-explosives equivalent). **Table 3.23.** applies.

3.30.10.5. Compatible Storage. Separation distance between stored quantities of different propellants of the same compatibility storage group will be determined as follows:

3.30.10.5.1. For propellants of the same hazard group, use the distance given in the intragroup/intraline column of the applicable **Table 3.22.** for the largest quantity of propellant involved.

3.30.10.5.2. For propellants of different hazard groups, based on each quantity of propellant involved, determine the distance given in the intragroup/intraline column of the applicable table for each hazard class. Use the greatest distance.

3.30.11. Incompatible Storage.

3.30.11.1. When propellants are of different compatibility groups, use the greatest IB distance. ***EXCEPTION***: If propellants are subdivided by barriers, or other means to prevent mixing in the event of a mishap, determine the minimum separation as in **3.30.10.5.** or **3.30.10.5.1.** above, as applicable.

3.30.11.2. Minimum separation between quantities of propellants (all groups) and the various "divisions" of other explosives will be the distances prescribed for POL in paragraph **3.29.** Use **Table 3.3.** for the division of explosives involved. If more than one division is involved, use the distance for the greatest separation.

Table 3.22. Quantity-Distance for Propellants.[9]

Pounds of Propellant		Hazard Group 1		Hazard Group II		Hazard Group III		
		IB, PTR, & Incompatible Group I [2,4,10]	Intra-group IL[1] Group I [5]	IB, PTR, & Incompatible Group II [2,6,10]	Intra-group IL [1] & Group II [7]	IB, Incompatible [2,10]	PTR & Group III	Intra-Group IL [1] & Group III [11]
Over	Not Over					Unprotected [9]	Protected [8, 10]	
0	100	30	25	60	30	600	80	30
100	200	35	30	75	35	600	100	35
200	300	40	35	85	40	600	110	40
300	400	45	35	90	45	600	120	45
400	500	50	40	100	50	600	130	50
500	600	50	40	100	50	600	135	50
600	700	55	40	105	55	600	140	55
700	800	55	45	110	55	600	145	55
800	900	60	45	115	60	600	150	60
900	1,000	60	45	120	60	600	150	60
1,000	2,000	65	50	130	65	600	175	65
2,000	3,000	70	55	145	70	600	190	70
3,000	4,000	75	55	150	75	600	200	75
4,000	5,000	80	60	160	80	600	210	80
5,000	6,000	80	60	165	80	600	220	80
6,000	7,000	85	65	170	85	600	225	85
7,000	8,000	85	65	175	85	600	230	85
8,000	9,000	90	70	175	90	600	235	90
9,000	10,000	90	70	180	90	600	240	90
10,000	15,000	95	75	195	95	1,200	260	95
15,000	20,000	100	80	205	100	1,200	275	100
20,000	25,000	105	80	215	105	1,200	285	105
25,000	30,000	110	85	220	110	1,200	295	110
30,000	35,000	110	85	225	110	1,200	300	110
35,000	40,000	115	85	230	115	1,200	310	115
40,000	45,000	120	90	235	120	1,200	315	120
45,000	50,000	120	90	240	120	1,200	320	120
50,000	60,000	125	95	250	125	1,200	320	125
60,000	70,000	130	95	255	130	1,200	340	130
70,000	80,000	130	100	260	130	1,200	350	130
80,000	90,000	135	100	265	135	1,200	360	135
90,000	100,000	135	150	270	135	1,200	365	135
100,000	125,000	140	110	285	140	1,200	380	140
125,000	150,000	145	110	295	145	1,800	395	145
150,000	175,000	150	115	305	150	1,800	405	150
175,000	200,000	155	115	310	155	1,800	415	155
200,000	250,000	160	120	320	160	1,800	425	160
250,000	300,000	165	125	330	165	1,800	440	165
300,000	350,000	170	130	340	170	1,800	455	170
350,000	400,000	175	130	350	175	1,800	465	175
400,000	450,000	180	135	355	180	1,800	475	180
450,000	500,000	180	135	360	180	1,800	485	180
500,000	600,000	185	140	375	185	1,800	500	185
600,000	700,000	190	145	385	190	1,800	515	190
700,000	800,000	195	150	395	195	1,800	530	195
800,000	900,000	200	150	405	200	1,800	540	200
900,000	1,000,000	205	155	410	205	1,800	550	205
1,000,000	2,000,000	235	175	470	235	1,800	630	235
2,000,000	3,000,000	255	190	505	255	1,800	675	255
3,000,000	4,000,000	265	200	535	265	1,800	710	265
4,000,000	5,000,000	275	210	555	275	1,800	740	275
5,000,000	6,000,000	285	215	570	285	1,800	760	285
6,000,000	7,000,000	295	220	585	295	1,800	780	295
7,000,000	8,000,000	300	225	600	300	1,800	800	300
8,000,000	9,000,000	305	230	610	305	1,800	815	305
9,000,000	10,000,000 (3)	310	235	620	310	1,800	830	310

NOTES:

1. See Paragraph **3.30.2.3.** and **3.30.2.4.**
2. See Paragraph **3.30.11.**
3. Extrapolations above 1,000,000 lbs extend well outside data included in the Bureau of Mines report from which original Q-D tables were derived; however, they are supported by independent calculations and knowledge of like phenomena.
4. Values are one-half of the Group II inhabited building distance.
5. Values are three-fourths the Group II and Group III intra-group distances.
6. Distances were selected as three-fourths the Group III inhabited building distance and considered reasonable due to the lesser hazard.
7. Distances were derived from the Bureau of Mines, Department of the Interior Report No. 5707, dated 1961, modified and expanded. They average 37.5 percent of the inhabited building distances given in this report.
8. The term "protected" means that protection from fragments is provided by terrain, effective barricades, nets, or other physical means.
9. Distances are necessary to provide reasonable protection from fragments of tanks or equipment that are expected to be thrown in event of a vapor phase explosion.
10. Distances are the recommended inhabited building distances given in the Bureau of Mines, Department of the Interior Report No. 5707, dated 1961, and extrapolation thereof (2 cal/cm 2 on 1 percent water vapor curve).
11. Distances are an average of 37.5 percent of "protected" column.

Table 3.23. Hazard Group IV Separation Distances.

Quantity of Propellant/Explosives	Distance in Feet from Propellant/Explosive Hazard		
Total Weight Gp IV Propellant or H.E. Equivalents for other Propellants/Explosives See **Table 3.19.** (1) in pounds	To Inhabited Buildings	To Public Traffic Routes	Intraline (2)
	Use **Table 3.6.**, K40/50 Column. 1250' Min	Use **Table 3.6.**, K24/30 Column. 750' Min	Use **Table 3.6.** K18 Column

NOTES:

1. Distances must be increased, where required, to provide proper protection for all additional mass-detonating explosives (nonnuclear material) and all added solid propellants involved in the system or operation, as follows:
   a. Use the net weight of all mass-detonating explosives involved in any configuration, including high-explosive
   b. Use the applicable high-explosives equivalent assigned to all solid propellant motors involved.
   c. The required separation distance will be determined by using the sum of the high-explosives values of the liquid propellants and other explosives involved, on the basis of a and b above. Do not determine the distances for each explosive element separately and then add these distances together.
1. Distances less than intraline are not applicable to the propellants and situations covered by this table.

Section 3D—Applying Q-D Principles to Specific Weapons Systems and Special Storage Configurations

3.31. General Information. This section expands the general quantity-distance (Q-D) principles and applies those principles to specific situations where testing has been conducted. These tests provided information to establish specific separation distances. Criteria is provided for weapons systems or special storage configurations that have been tested, or where an analysis has been performed, to verify special Q-D criteria.

3.31.1. In many cases the use of these criteria requires that certain configurations or situations exist before the reduction can be applied. If these requirements are not adhered to, calculate the total net explosives weight (NEW) of explosives present, and use the criteria in **Table 3.3.** to determine Q-D separations.

3.32. LGM-30 (Minuteman). Use the following high explosives equivalency for the LGM-30 missile while calculating Q-D separations.

Table 3.24. Minuteman TNT Equivalencies.

Stage	HC/D	NEW	TNT Factor	TNT Equiv
I (F&G)	1.3	45,800	NA	NA
I (F&G)	1.3	45,800	.035	1600(1)
II (F&G)	1.3	13,680	NA	NA
II (F&G)	1.3	13,680	.152	2100(1)
III (F)	1.1	3671	1.01	3700(1)
III (G)	1.3	7281	NA	NA
III (G)	1.3	7281	.506	3700(1)

NOTE: These equivalencies apply to LGM 30 Minuteman motors, whether assembled into a set or stored/handled separately, when a HC/D 1.1 initiator is present.

3.32.1. Calculate NEW for motor sets (Stages I, II, and III), assembled or unassembled, with HC/D 1.1 material, on HC/D 1.1 equivalency basis unless the 1.3 hazard is greater.

3.32.2. When only HC/D 1.3 motors are present, use total NEW of the motors, and apply HC/D 1.3 Q-D criteria. For LGM-30G motors use class/division 1.3 Q-D criteria for shipping and storage purposes. When a warhead is added to the assembled set, the 7,400-pound high explosives equivalency applies. Safety distances are based on 7,400 pounds HC/D 1.1 high explosive equivalency for all LGM-30 missile motor sets (models A through G) with or without a warhead installed. IB distances are 1,570 feet from buildings of public assembly and 1,200 feet from all other inhabited buildings.

3.32.3. Separations for aircraft loading and unloading sites for solid propellant motors in shipping and storage containers, Ballistic Missile Containers (SSCBM) and Payload Transporter Container:

3.32.3.1. IB distance is 1,200 feet (includes missile holding pads, facilities, aircraft or other equipment essential to the mission of the base; PTR is 720 feet.

3.32.4. Aircraft Loading and Unloading Sites. When an aircraft loaded with these motors must be refueled, a fully staffed fire fighting truck will be on standby at the aircraft during fueling operations.

3.32.5. Railroad Loading and Unloading Sites**.** Criteria in paragraph **2.76.18.** apply to railroad loading and unloading sites for Minuteman missile motors in the SSCBM and missile transporters shipped by the "piggyback" method.

3.32.6. Missile Alert Facility (MAF). Explosives-loaded vehicles (payload transporter, reentry vehicle guidance and control van, transporter erector) may be temporarily parked at the MAF, subject to the following controls:

3.32.6.1. Each instance must be approved by the wing/installation commander or his designated representative.

3.32.6.2. Allow parking if needed for severe weather, equipment breakdown and repair, crew rest, darkness (where state law prohibits vehicle travel on highways after dark) or other emergency conditions.

3.32.6.3. No smoking outside missile alert facility support buildings.

3.32.6.4. Park only one explosives-loaded vehicle.

3.32.6.5. Publish a detailed operating instruction of safety precautions and controls.

3.32.6.6. Ensure required security is maintained.

3.33. LGM-118 (Peacekeeper). Use the following high explosives equivalency for the LGM-118 missile while calculating Q-D separations.

3.33.1. Peacekeeper Separation. General explosives safety standards and Q-D criteria apply to the Peacekeeper except as outlined below:

3.33.1.1. When stages 1, 2, and 3 are assembled at other than a silo launch facility (with or without stage 4 warheads being attached), the net explosives equivalency for the missile is 203,412 pounds, class/division 1.1.

3.33.2. When the missile is in a silo launch facility or during missile installation or removal from the silo, the net explosives equivalency is 20,000 pounds, class/division 1.1. This equivalency is to be used only for calculating intermagazine and intraline separations, and for use in risk assessments based on blast overpressure. Applicable distance for PTR is 1,050 feet and for IBD, 1,750 feet.

Table 3.25. Peacekeeper TNT Equivalencies.

Stage	HC/D	NEW	TNT Factor	TNT Equiv
I	1.3	99,133	NA	NA
I	1.3	99,133	1.20	118960(1)
II	1.3	54,120	NA	NA
II	1.3	54,120	1.20	64,944(1)
III	1.1	15,606	1.25	19,508(1)

NOTE: These equivalencies apply to Peacekeeper motors, whether assembled into a set or stored/handled separately, when a HC/D 1.1 initiator is present. When stage III's are stored only with other stage III's, the HC/D 1.1 NEW versus TNT equivalency may be used.

3.34. Tactical Missile Separations (also see Table 3.26.).

3.34.1. AIM-7 Missile (Other than WAU-17 Warhead). When these conditions are met MCE is limited to a single AIM-7 warhead with an HC/D of (07)1.1.

3.34.1.1. Separate warheads of adjacent AIM-7 missiles by 5 inches or more.

3.34.1.2. Separate AIM-7 warheads from all AIM-9 warheads by at least 22 inches.

3.34.1.3. Or, warheads are not radially aligned.

3.34.2. AIM-7 Missiles (Other than WAU-17 Warhead) in Containers. AIM-7 missiles that explode in an all up round container (AURC) will not propagate to warheads in adjacent containers, either vertically or horizontally. MCE is limited to four warheads.

3.34.3. AIM-7 Missiles with WAU-17 Warhead in an AURC. All missiles in an AURC will sympathetically detonate, therefore the MCE is all four warheads in the AURC (36 lbs x 4 or 144 lbs).

3.34.3.1. These warheads can sympathetically detonate other HC/D 1.1 explosives in radial alignment of the warhead.

NOTE: Until actual testing is completed, use radial aligned separation distance of 100 inches (8'4") to prevent propagation of one warhead to another.

3.34.3.2. Detonation of warheads in an AURC will not transfer to adjacent containers side-by-side, but containers within a single vertical stack must be alternated, nose-to-tail, to prevent propagation vertically. MCE would then be four warheads.

3.34.4. When AIM-7 missiles (with WAU-17) are in the open or light structures that do not stop primary fragments, the hazardous fragment distance (IBD) varies with the number of warheads subject to sympathetic detonation (those in radial alignment and at less than 100 inches from each other) as follows:

# Warheads	IBD
1	280
2	565
3	770
4	955
5	1,120
6	1,245
≥7	1,250

3.34.5. When AIM-7 missiles (with WAU-17) are in a heavy structure (other than ECMs) capable of stopping primary fragments, use **Table 3.9.** to determine the hazardous fragment distance. MCE is the total number of warheads in the structure, unless a lesser MCE is approved by AFSC/SEW. Heavy structures are those with a wall thickness ≥12 inches of reinforced concrete and a roof thickness >5.9 inches of reinforced concrete. For ECMs, use **Table 3.26.**, Line 8.

3.34.6. AIM-9 Missiles. A warhead detonation will not cause sympathetic detonation of adjacent AIM-9 missiles provided warheads are separated by 22 inches or more, or warheads are not radially aligned. If these conditions are met, MCE is limited to a single AIM-9 warhead. AIM-9 missiles that detonate in AUR containers will not propagate to any adjacent container either vertically or horizontally. MCE is limited to four warheads.

3.34.7. AGM-65 Missiles. Explosives weights of individual AGM-65 missiles or loaded launchers need not be added together if adjacent missiles or launchers are separated by at least 130 inches and the nose of any AGM-65 missile does not point at any other missile.

3.34.8. AGM-88 Hi-Speed Anti-radiation Missile (HARM). For storage and transportation in AUR container, missiles are assigned HC/D 1.2.1, with an MCE <100 lbs [HC/D (04)1.2]. Out of container, missiles are assigned HC/D (04)1.1. A warhead detonation will not cause sympathetic detonation of adjacent warheads if they are separated by at least 6 inches, or if the warheads are not radially aligned.

3.34.9. AIM-120 Advanced Medium Range Air-to-Air Missile (AMRAAM). For storage and transportation in AUR container, AIM-120A/B/C1-3 models are assigned HC/D 1.2.1 (HC/D (08)1.2) with an MCE of 68 pounds (NEWQD is 16.9 pounds per missile). AIM-120C4/5 models in AUR containers are assigned to HC/D 1.2.1 with an MCE of 76 pounds (NEWQD is 19 pounds per missile). Out of container, missiles are assigned hazard class/division 1.1, with a hazardous fragment distance of 500

feet for one missile. For missiles out of container and with radially aligned warheads at less than 100 inches of separation, the following IBD applies:

# Warheads	IBD
2	600
3	650
4	700
8	800

NOTE: Interpolate distances for quantities between or over those listed above.

3.34.10. Mixed Trailer Loads. Use criteria in paragraph **3.34.** and configurations shown in TO 11-1-38, *Positioning and Tie-Down Procedures--Nonnuclear Munitions*, to determine MCE

3.35. Aircraft Criteria. Unless otherwise specified, aircraft loaded with explosives and munitions will be considered an above ground magazine. For Q-D purposes, do not combine explosives considered part of aircrew survival equipment. See paragraph **3.25.4.** for procedures on other Q-D exempt ordnance.

3.35.1. For B-52 aircraft with certain approved nuclear weapons loads (internal load only), authorized IBD is 760 feet and PTR is 460 feet with an NEW of 400 lbs HC/D 1.1 explosives. For guidance, contact MAJCOM/SEW.

3.35.2. F-15 aircraft with AIM/AGM Series Missiles. For an F-15 configured with 4 AIM-9s (7.4 lbs NEW) and 4 AIM-7s (WAU-17 warhead with 36 lbs NEW), the MCE of 101.6 lbs NEW applies: IM distance is 52 feet; IL distance is 84 feet; PTR is 240 feet; and IBD is 400 feet. For other F-15 configurations see **Figure 3.7.**

3.35.3. F-16 aircraft with AIM/AGM Series Missiles. See **Figure 3.8.**

3.35.3.1. For F-16, Configuration 3, with only AIM-120A, AIM-120B, and AIM-120C1 through C3 missiles: NEWQD = 16.9 lbs, IMD = 29 ft, ILD = 47 ft, PTR = 300 ft, and IBD = 500 ft.

3.35.4. Other aircraft configurations with mixed missile loads must be requested through MAJCOM/SEW.

3.36. Buffered Storage Concept. Under certain conditions, propagation can be prevented between stacks of tritonal-filled MK-82 and MK-84 bombs. NEW for Q-D purposes is the explosives weight of the largest stack plus explosives weight of intervening buffer material. Buffered storage can be used in earth covered magazines, aboveground magazines, or open stacks.

3.36.1. Stacks are limited to 64 MK84 or 312 MK82 bombs. Combined stacks are limited to 60,500 pounds NEW.

3.36.2. Acceptable buffer materials are: palletized 20mm ammunition, palletized 30mm ammunition, or CBU-58s packaged two per metal container, stacked one pallet wide (one container CBU-58) and as high as the stack being protected.

3.36.3. Buffer materials must be positioned between the two stacks of bombs to prevent line-of-sight exposure between stacks.

3.36.3. (PACAF) Contact PACAF/SEW for approved buffered storage drawings.

3.36.4. Units wanting to use different configurations or buffer materials must submit definitive drawings through the MAJCOM to AFSC/SE for approval. These new buffers will consist of HC/D 1.2, 1.4, or inert materials that have an aerial density of 500 pounds per square foot. For bomb stacks less than 24,000 pounds, an aerial density of 250 pounds per square foot is acceptable.

3.36.5. Steel nose and tail plugs must be used in all bombs. Bombs are arranged so the noses of the bombs in each stack are facing the buffer.

3.36.6. A minimum of 38 feet is maintained between the nearest bombs of the separate stacks. For bomb stacks of 24,000 pounds or less, 20 feet is acceptable. The stacks will be arranged within a structure so access is possible to verify the configuration.

3.36.7. Only serviceable munitions may be used in the bomb stacks or the buffer stacks.

3.36.8. Buffer material may be removed for periodic inspections without effecting sited capacities if it is returned within 24 hours.

3.36.9. The above criteria is approved for storage in the Continental United States (CONUS) and overseas locations where US explosives safety standards are the only criteria applied. In Europe, or other locations where host nation has established safety criteria, these principles must be accepted by the host nation before they may be applied.

3.37. Angled Storage. Test have shown that fragments from an exploding MK-82/84 bomb that are capable of initiating a nearby bomb are limited to a zone extending perpendicular to the bomb. Therefore positioning of bombs outside the fragment zone of other bombs may significantly reduce the MCE.

3.37.1. In Hardened Aircraft Shelters (HAS). Place single bombs and loaded triple ejector racks (TER), or bomb rack units (BRU) at a 15 degree angle along one shelter wall. Angle bomb and rack away from the aircraft and point tails toward the wall.

3.37.1.1. Maintain 4-foot separation distance from MK-84s to other weapons and 30-inch separation from MK-82s to other weapons.

3.37.1.2. Do not align unfuzed cavities of bombs.

3.37.1.3. Install fuzes, boosters, steel nose and tail plugs or guidance packages.

3.37.1.4. Do not place bombs in an area on either side of another bomb bounded by two lines, 20 degrees forward and aft of lines perpendicular to the bomb centerline and starting at the nose and the tail of the bomb, respectively (see **Figure 3.6.**).

Figure 3.6. Fragment Zones for General Purpose Bombs.

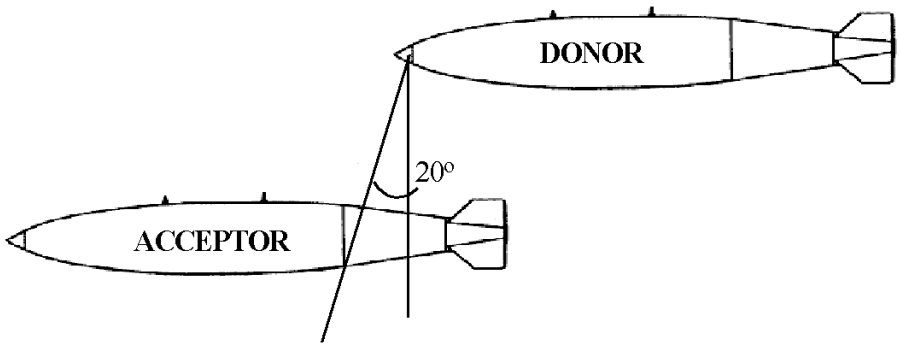

3.37.1.5. If above criteria is complied with, the MCE is the cumulative NEW of one TER or BRU, or for single angled bombs, it is the NEW of one bomb.

3.37.2. On Aircraft Parked on Open Ramps. The same fragment principle applies whether or not the bombs are on an aircraft or support stands. Open ramp, bomb loaded aircraft, separated at less than K11, may be angled to prevent simultaneous detonation. Combat aircraft parked at 45° with standard wingtip separation (see AFH 32-1084) meet the IM separation requirement for MK 82/84 bombs. The MCE would be one aircraft. However, this principle applies only to general purpose bombs. Therefore do not site aircraft with an air-to-ground mission requiring other ordnance using reduced MCE for angled parking. Nevertheless, parking loaded aircraft at an angle may significantly limit collateral damage to adjacent aircraft and is preferred.

3.37.3. On Aircraft in HASs. When an explosives loaded aircraft is in the shelter, the weight of the explosives on the aircraft and the stored weapons must be combined if either the weapons on the aircraft or the stored weapons are in the fragment zone, described above, of the other weapons.

Figure 3.7. F-15 Aircraft Criteria

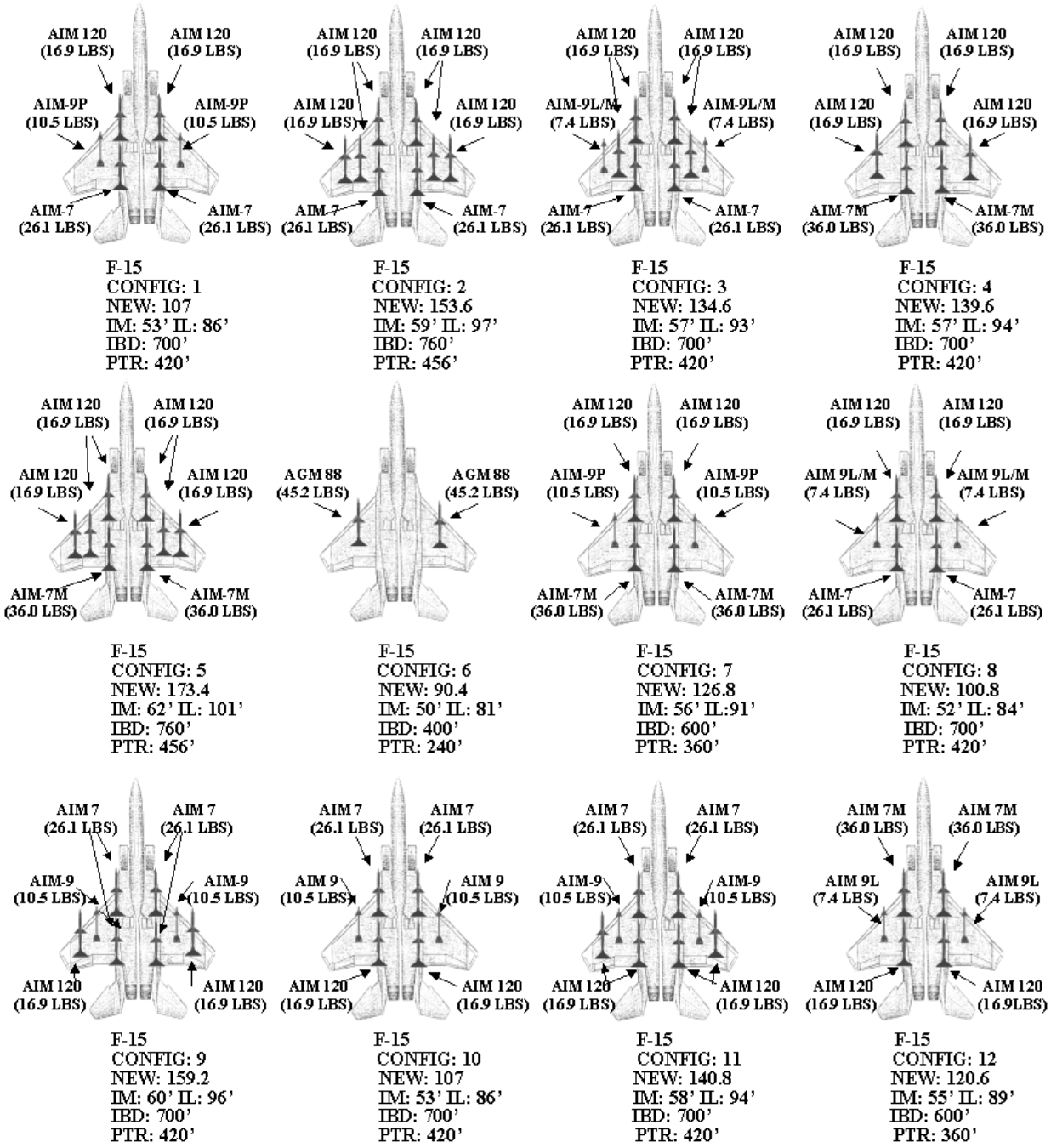

NOTE: IM or IL criteria for the internal HC/D 1.2 gun ammunition and internal HC/D 1.3 flares do not need to be considered with these loads. The AIM-120s shown are for the 16.9 pound warhead only. AIM-120 models C4/C5 have 19 pound warheads and will require new missile configuration requests in accordance with paragraph **3.35.4.**

Figure 3.8. F-16 Aircraft Criteria.

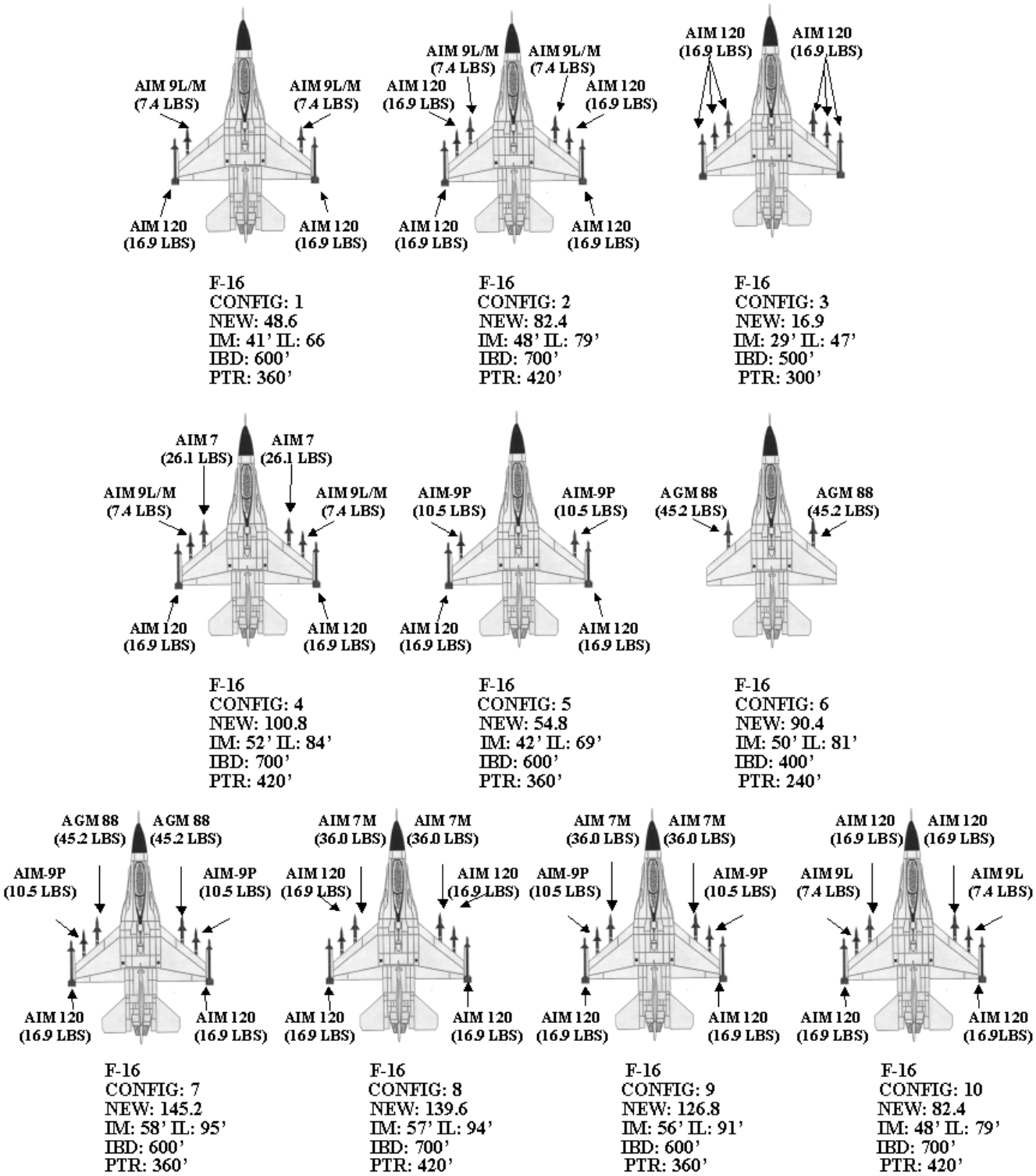

NOTE: IM or IL criteria for the internal HC/D 1.2 gun ammunition and internal HC/D 1.3 flares do not need to be considered with these loads. The AIM-120s shown are for the 16.9 pound warhead only. AIM-120 models C4/C5 have 19 pound warheads and will require new missile configuration requests in accordance with paragraph **3.35.4.**

3.38. Weapons Storage Vaults in Hardened Aircraft Shelters . The special weapon contents of a weapons storage vault (WSV) will not contribute to an explosion in a HAS if certain separations are maintained. The explosives in the WSV need not be considered when computing the NEW of the HAS if the presence and location of conventional munitions in the HAS correctly conform to what is allowed by the applicable weapons system safety rules (WSSRs), AFI 91-112, *Safety Rules for US Strike Aircraft*, and AFI 91- 113, *Safety Rules for Non-US NATO Strike Aircraft*.

3.39. Specific Items and Situations. Some munitions have been tested sufficiently over the years that explosives criteria have been adopted for the specific item or situation. **Table 3.26.** gives these criteria.

Table 3.26. Minimum Distances for Specific Items and Situations.

Line	Item/Situation	Quantity of Explosives	Required Distance (Feet)		
			IB (NOTE)	PTR (NOTE)	IL (NOTE)
1	**Above ground storage of demolition explosives, thin cased low fragmentation munitions and in-process explosives**	**<100 lbs NEWQD**	(1)	(1)	(6)
1.1	**Above ground storage – all HC/D 1.1 munitions and explosives**	**100-450 lbs NEWQD**	(1)	(9) (1)	(6)
1.2		**451- 11,400 lbs NEWQD**	900 (2)	750	(6)
1.3		**11,400-30,500 lbs NEWQD(2)**	1250 (1)	750 (2)	(6)
2	**Earth covered igloos – all HC/D 1.1 munitions and explosives**	**1-150 lbs NEWQD**	500 front 250 side/rear	300 front 150 side/rear	(8)
2.1		**151-450 lbs NEWQD**	700 front 250 side/rear	420 front 150 side/rear	(7) (8)
2.2	**For ECMs < 26' x 60'**	**451-11,400 lbs NEWQD (2)**	900	750	(7) (8)
2.3	**For ECMs ≥26' x 60'**	**451-17,000 lbs NEWQD (2)**	900	750	(7)(8)
3	**Locations where structures, blast mats, and personnel shielding will completely confine fragments and debris (for igloos see line 2)**	**50 lbs NEWQD or less**	K40/50	K24/30	(6)
4	**Explosives detector dog training in facilities or buildings**	**7 lbs NEWQD or less dispersed in structure**	100 (4)	100 (4)	50
5	**Explosives detector dog training Security Police Academy, Lackland AFB TX**	**10 lbs NEWQD or less dispersed in structure**	100	100	50
6	**2.75" rockets having 4-in. parallel and vertical separation**	**All quantities (AUR)**	400	240	50 (7)
6.1	**2.75" rockets stored and maintained in RSCA buildings (5)**	**All quantities**	0	0	0

Line	Item/Situation	Quantity of Explosives	Required Distance (Feet)		
			IB (NOTE)	PTR (NOTE)	IL (NOTE)
7	**AIM-7 series AUR missiles with other than WAU-17 warhead.**				
7.1	**Single missiles separated according to paragraph 3.34.1.**	**All quantities**	700	420	(6) (7)
7.2	**Packed in AUR containers - igloo storage only**	**All quantities**	500 front 250 side/rear (3)	300 front 150 side/rear (3)	(8)
7.3	**Packed in AUR containers - Facilities with aboveground magazines other than igloos**	**All quantities**	700	420	(6) (7)
8	**AIM-7 Series AUR missiles with WAU-17 in igloo storage only**				
8.1	**Alternately stacked containers (according to paragraph 3.34.3.) and trailers not in radial alignment**	**All quantities**	500 front 250 side/rear (3)	300 front 150 side/rear (3)	(8)
8.2	**Alternately stacked containers (according to paragraph 3.34.3.) and no more than 3 trailers in radial alignment**	**All quantities**	700 Front 250 Side/Rear	420 Front 150 Side/Rear	(8)
8.3	**More than 3 trailers in radial alignment, or storage with other AIM-7 or AIM-9 missiles**	**MCE = total warheads in igloo (11)**	Same as line 2 above	Same as line 2 above	Same as line 2 above
9	**AIM-7 AUR (not WAU-17) on trailer with or without other AIM-7 (not WAU-17) or 9 missiles stored in igloos**	**Total quantity of all warheads radially aligned (10)**	Same as line 2 above	Same as line 2 above	(8)
10	**AIM-7 AUR (not WAU-17) on trailer with other AIM-7 missiles (not WAU-17) not stored in igloos**	**2-24 warheads radially aligned**	700	420	(6) (7)
11					
12	**AIM 7 missiles (not WAU-17) stored in facilities other than igloos**	**MCE - 100 lbs or less**	700	400	(6)
13	**Single AIM-9 series missiles, separated according to paragraph 3.34.6., in the open**	**All quantities**	400	240	50 (3)
14	**MK 82 GP bomb in the open**	**1 bomb**	670	400	(6)(7)
15	**M117 GP bomb in the open**	**1 bomb**	690	415	(6)(7)

NOTES:

1. Incremental K40 (IB) or K24 (PTR) may be used when fragments or building debris are not involved. When fragments or building debris are involved see **Table 3.9.** HC/D 1.2 munitions and HC/D 1.1 munitions with a fragment hazard number assigned are considered high fragmenting munitions. Explosives in any building are assumed to create building debris unless an engineering analysis shows fragments will not go beyond a lesser distance. When in doubt, contact HQ AFSC/SEW, Kirtland AFB.

2. For sparsely populated locations, reduce the minimum 1,250-foot fragment distance to 900 feet [270 meters (m)] if the PES does not exceed 11,400 pounds (5,140 kg) for ECMs <26’ x 60’, or

17,000 pounds (7,711 kg) for ECMs ≥ 26' x 60'. Allow no more than 25 persons in any sector bounded by the sides of a 45 degree angle, with the vertex at the PES, and the 900 feet (270 m) and 1,250 feet (380 m) arcs from the PES. See **Figure 3.1.**

3. Missile fragments are contained, therefore, since only the contents of one container will react, the secondary igloo debris distances apply.
4. Nonessential personnel will be evacuated a minimum of 100 feet during training exercises.
5. RSCA buildings must have at least 3/8" steel doors. Rockets must face a 12" wall.
6. See **Table 3.9.**
7. Does not provide protection against fragments.
8. Use K18 from front, K16 from sides, K12 from rear for MCE, minimum 50 feet (less distance may be used when structures, blast mats and the like can completely contain fragment and debris).
9. Calculate PTR as 60 percent of IB.
10. NEWQD for missiles in radial alignment need to be totaled only if warheads are separated by less than 100 inches.
11. A lesser MCE may be used if approved by AFSC/SEW.

3.40. Space and Intercontinental Ballistic Missile Criteria.

3.40.1. Some launch pad facilities such as mobile service towers, umbilical mast towers, launch ducts, blockhouse, and launch mounts are identified by a building number on the base master plan. But, for the purpose of explosive site planning, they are considered an "integral part of the facility" and do not require exposed site separation distances due to the nature of their function. Likewise, facilities that provide direct support to these launch pads such as maintenance and build-up shops, pressurization systems, instrumentation terminal rooms, etc., are an integral part of the facility and do not require Q-D separation distances from the pads they support.

3.40.2. Technical support areas may be associated with these facilities. Locate all direct support personnel at no less than IL distance or equivalent protection from the PES and dispatch them to the PES as required.

3.40.3. Locate any parking lots (GOV or POV) which exclusively serves the motor or motor storage, staging, or operations facility according to **Chapter 3**.

3.40.4. Locate launch complexes at AF launch ranges using two sets of criteria. The first set is based on Q-D criteria. They address pre-launch operations (including pressurized launch rehearsal) and static explosive threats. These will be defined for each facility in the explosives safety site plan. The TNT equivalencies to be utilized are included in **Table 3.19.** The second set of criteria used to locate a launch complex on the range address launch and space vehicle dynamic flight. Range safety guidance will define the criteria and flight safety analysis techniques required to determine the down range explosive threat resulting from a launch.

3.40.4.1. Separate new launch pads by at least an IL distance from each other. The larger NEW of the two launch vehicles will dictate the minimum separation between the two launch pads. For HC/D 1.1 launch vehicles, the minimum separation required is K-18. For HC/D 1.3 launch vehicles, **Table 3.13.**, IL column. Hazardous operations in one facility may impact operations in

another related facility. In order to protect personnel and not impact operations due to evacuation, IB quantity distance criteria should be used to initially site the two facilities, as opposed to IL distances.

3.40.4.2. Determine launch complex locations in the range launch area based on flight safety analyses including risk analysis such as the Launch Area Risk Analysis (LARA) program and other flight safety techniques described in range safety guidance. The Range Safety Office responsible for a launch area will consider explosive siting and missile flight hazards when determining the location of a launch complex in relationship with other launch complexes and support facilities.

3.40.4.3. For Q-D purposes, measure from the explosives at the launch mount, for a launch complex and at the test stand, for a test complex.

3.40.5. Space Test Facilities. During explosives site planning for new motor or motor segment test operation facilities, provide a personnel direct support facility at least intraline distance from the PES. ***Note***: This separate location will permanently house direct support personnel for the PES. It will be a dispatch point, break room, and change room for these personnel. These direct support personnel facilities may be located at closer than IL distances if protective measures are used to provide minimum required overpressure and fragment protection. Use the prevailing wind direction as a primary consideration when locating test stands in relationship to other facilities that will be inhabited during testing. Non-DoD LSRM test facilities on AF installations must not hazard Government assets. Use **Table 1.1.** to determine siting criteria for non-DoD activities.

3.40.6. Static Test Facilities. Site and construct static test facilities for maximum flexibility to meet frequently changing technological requirements. A typical static test facility will have several test stands that share common support facilities such as ready storage tanks, pressurization systems, test control rooms, maintenance support and build-up shops, and steam-generating vacuum systems. To the extent possible, separate test stands by intraline distance. In some cases, test support requirements, such as vacuum testing, do not support Q-D separation if test objectives are to be achieved. To minimize the risk to adjacent test stands, only one test stand will be used at a time when Q-D requirements cannot be met. Remove or protect all equipment not being used to support current test operations, or obtain a waiver approved at the appropriate level. See **Chapter 5** for waiver/exemption procedures.

3.40.7. Building and Use of Non-DoD Space Explosives Facilities on AF Installations and Non-DoD Use of Existing Government Facilities. AF policy permits a non-DoD space user to lease land on an AF installation and construct explosives facilities to support non-DoD and/or Government space operations. Additionally, a non-DoD space user may be granted a license to use an existing Government explosives facility. These facilities include but are not limited to explosives storage facilities, explosives operations facilities, missile launch pads, test facilities, and combinations thereof. Use **Table 1.1.** for Q-D criteria for siting non-DoD activities.

3.40.8. DOD Explosives Hazard Classification. Apply DOD explosives hazard classifications to explosives stored or used on military installations and reflect them in all applicable facility explosives site plans. For commercial explosive items that have not been acquired and adopted for use by the Air Force, but will be stored and transported on an Air Force installation in conjunction with commercial launch programs, the following exceptions may be applied:

3.40.8.1. The items may be offered for transportation off the installation via commercial carriers using hazard classification approvals issued to the item manufacturers by the Department of Transportation (DOT).

3.40.8.2. An item may be stored, handled, and transported on the installation using the hazard classification approval issued by DOT if the local commander reviews and concurs with that hazard classification, except for articles assigned to hazard class/division 1.2. These must be stored and handled as DOD hazard class/division 1.1. Obtain approval to store non-DOD commercial items as hazard class/division 1.2 from a DOD hazard classification authority listed in TO 11A-1-47.

3.40.9. Expanding Q-D and Risk Assessment. Problems are encountered around launch pads and test stands where lack of real estate coupled with a high concentration of people, facilities, and equipment make compliance with Q-D standards impossible. Explosive content of a launch pad/test stand varies according to a well defined operational concept and the maximum NEW is typically present only during a short period of time just before launch/test. This allows management to take actions to protect or remove resources and personnel as the NEW is increased.

3.40.10. Expanding Q-D. Expanding Q-D is a process available to commanders similar to tiered siting which allows them to analyze and minimize risk to personnel, facilities, and operational capabilities. Expanding Q-D is a risk-based management tool that provides an organized way to evaluate risks and assess action that will mitigate the impact of an explosive mishap during periods of increased activity. In an expanding Q-D system, a launch pad or test stand may have different NEWs during different stages of prelaunch/test missile buildup. To maximize protection under the expanding Q-D approach, the responsible commander will develop and publish procedures to ensure non-essential equipment, supplies, and personnel are removed prior to increasing NEW limits.

3.40.11. Procedures for Expanding Q-D Risk Management**.** Determine launch pad/test stand NEW for various stages of launch vehicle buildup. For each stage, evaluate all exposed sites (ES) that are within the Q-D arc generated by the NEW. If Q-D criteria is not violated in the largest arc, submit a site plan for the maximum NEW. If violations exist, the following actions are required:

3.40.11.1. Evacuate non-direct support personnel from an ES falling within the Q-D arc generated by the NEW. A waiver or exemption is required if the ES cannot be evacuated

3.40.11.2. Publish procedures to minimize risk for stage with QD violations. Guidelines must specify:

3.40.11.2.1. The organization responsible for implementing risk reduction actions

3.40.11.2.2. Conditions under which risk reduction actions will be directed and when they will take place

3.40.11.2.3. On-scene inspection procedures to ensure risk management actions are being accomplished

3.40.11.2.4. Facilities to be evacuated

3.40.11.2.5. Critical equipment and supplies to be protected or evacuated

3.40.11.2.6. Procedures to ensure the program is evaluated on a recurring basis.

3.40.11.3. On the site plan, clearly label the different Q-D arcs associated with the different NEW levels.

3.40.12. Blockhouse Requirements.

3.40.12.1. Launch Complex Blockhouse. In general, the AF is moving away from the use of hardened blockhouses located at launch complexes in favor of soft, remote launch control centers. Until all operations requiring on-site manning in the blockhouse during launch are moved to remote locations, ensure blockhouse personnel are protected to a reasonable degree of safety. In the event of detonation of a launch vehicle on the launch pad or shortly after lift-off, the blockhouse must be able to withstand a direct impact of the largest expected amount of explosive debris and also the over-pressure resulting from the initial explosion and from subsequent explosions of firebrands landing nearby.

3.40.12.2. Test Control Blockhouse. Blockhouses for static test stands can either be unprotected facilities at K-24 for the maximum propellant load, or be hardened facilities capable of providing K-24 overpressure protection and fragment protection from the maximum propellant load.

3.41. 40mm Ammunition in Armories. Cartridges, 40mm, HEDP, M433 stored in CNU 541/E Containers (modified MK 387 MOD 0 containers with CEMCOM buffer liners) are hazard classified as HD 1.2.2, with an NEWQD of 0.102 pounds per cartridge. This hazard classification is for storage only. Cartridges may not be offered for transportation by commercial carriers in this packaging configuration.

Chapter 4

EXPLOSIVES SITE PLANNING, CONSTRUCTION REQUIREMENTS AND ASSESSING RISK

Section 4A—Explosives Site Planning

4.1. General Information. To minimize the negative effect of an accidental explosion on a unit's capability, safety and civil engineers monitor and control construction and facility utilization inside explosives clear zones. Where explosives are involved in a unit's mission, managing the explosives safety clear zone is the corner stone in helping the commander meet mission requirements, maintaining mission capability and efficiently use limited resources. Planning for the proper location and construction of facilities is a key element in this effort. To this end civil engineering in coordination with safety, fire, health, security and environmental agencies play a critical role.

4.1.1. The explosives clear zone is the area surrounding a potential explosion site that is determined by the required inhabited building separation. The inhabited building separation will be based on the sited, waivered, exempted, or actual explosives limits of the potential explosion site, whichever is greatest. Attempt to site explosives limits based on physical capacity or operational need, not solely on distances to other exposures. Civil engineers ensure explosives clear zones are depicted for all explosives locations on appropriate comprehensive planning maps.

4.1.2. Establishing and monitoring explosives clear zones does not necessarily eliminate accepted risk. Section C of this chapter explains the effects of explosions, allowing users to weigh risks against operational requirements.

4.1.3. Day-to-day, War Plan, and Military Operations Other Than War (MOOTW)/ Contingency/ Combat Operations.

4.1.3.1. Day-to-day Operations. Operations that a unit conducts on a day-to-day basis (including exercises, training and evaluations).

4.1.3.1. (PACAF) Alert aircraft missions at Alaska Forward Operating Locations (FOL) are considered Day-to-Day operations.

4.1.3.2. War Plan Operations. Operations that a unit plans to conduct only during a MOOTW, contingency or combat scenario. These operations are defined by operational plans, and are only projections based on possible or likely scenarios. They include planned operations at collocated operating bases (COBs). MAJCOMs will make ESPs for these operations available to deploying units tasked to activate COBs.

4.1.3.2. (PACAF) Alaska FOLs do not fall under the category of War Plan Operations.

4.1.3.3. MOOTW, Contingency, and Combat Operations. Operations that a unit actually conducts during a MOOTW, contingency or combat situation. These operations may actually occur as previously defined by the operational plan, may be modified from the operational plan, or may be newly defined if an operational plan did not exist prior to the MOOTW/contingency/combat situation.

4.1.3.4. Unless otherwise stated, all requirements in this manual apply to day-to-day, war plan, and MOOTW/contingency/ combat operations.

4.1.3.5. Non-DoD Explosives Activities on DoD Installations. An explosives site plan for non-DoD explosives facilities on AF installations must be prepared and submitted through AF channels for DDESB approval. These site plans will identify any explosives safety risk to Government assets within or outside of the non-DoD facility explosives Q-D arc. DDESB site approval for non-DoD operations and non-DoD storage will be limited to a "foot print" only (data that determines the IBD arc). Building design, lightning protection, etc., will not be included unless it is used to determine the IBD arc. Approval of the explosives site plan is only one of a series of approvals that must be granted by Government organizations to allow a non-DoD explosives activity onto an AF installation. The responsible commander must sign all explosives site plans prior to submittal to higher headquarters. The responsible commander must make a safety risk assessment concerning the possible loss/damage to any exposed Government facility/hardware based on current DoD mission requirements, future use of the facility by DoD components, range safety criteria, and any other pertinent data such as probability of occurrence of an explosives incident and time of exposure of Government assets as applicable. Non-DoD user insurance coverage for Government assets will not, by itself, be adequate justification for a non-DoD explosives activity to expose a Government facility to an unacceptable risk. See **Table 1.1.** for Q-D criteria for non-DoD explosives activities and para **5.2.8.** for guidance on waivers, deviations, and exemptions.

4.2. Basic Guidance. The explosives site plan (ESP) contains all necessary information to properly site a potential explosion site (PES) or an exposed site (ES). An ESP usually originates at the wing or base and is in the form of a request. Once approved, the ESP becomes the source document for explosives capacities and controls for that facility. Generally an ESP is required whenever new facilities or operations are added inside the installations explosives clear zone, or for any new construction for explosives storage or operating facilities. The weapons safety office will prepare and submit ESPs for facilities or operations requiring explosives safety siting approval. Approved ESPs will be maintained by the safety office and the using organization. The base Civil Engineer will assist in preparing ESPs as necessary, and ensure the weapons safety office is apprised of all proposed actions planned within the explosives clear zone before design and construction begin. Other functional requirements associated with the ESP process are covered in other sections of this chapter..

4.2. (PACAF) Wing Weapons Safety offices will incorporate approved explosive site plans into a base NEW guide or OI and distribute to all units with sited areas and those that utilize or document munitions items (see paragraph **2.3.7. (Added)** of this supplement). As a minimum, Munitions Control, the Wing Weapons Manager, Maintenance Operations Center (MOC), Maintenance Operations Division (MOD), the Installation Community Planner, and the EOD Chief will receive a copy.

4.2.1. An approved ESP insures compliance with explosives safety standards prior to construction or modification of facilities or locations where UN Class 1 material (explosives/ammunition) will be stored or maintained.

4.2.2. Expend only limited Air Force funds on a project requiring an explosives site plan prior to final approval by the DDESB. All funds spent on designing a PES or ES facility prior to DDESB approval may be placed at risk if proper explosives safety standards are not followed. The investment could be lost if site plan approval is contingent on changes or new facility requirements that were not considered or adequately addressed during the ESP preparation and review process. Specific requirements are identified in paragraph **4.11.**

4.2.3. ESPs submitted after 1 May 1999 must incorporate the HC/D 1.2.1, 1.2.2 and 1.2.3 criteria. Existing ESPs which are in the HC/D (XX)1.2 format must be updated to the new criteria prior to 31 December 2003.

4.2.4. Piers and wharfs for Air Force munitions will be sited using the criteria in DoD Std 6055.9, Chapter 9, Section E.

4.3. The Submission Process. The ESP originates at the installation level. After review by AFSC/SEW, the ESP is endorsed to the DDESB for approval. The reviewing agency will provide the ESP originator and previous review agency a copy of comments or changes made in the endorsement letter that effects the original intent of the ESP.

4.3.1. Approval process for ESPs meeting Q-D standards. See paragraph **4.9.** for ESPs violating Q-D standards.

4.3.1.1. ESPs for day-to-day operations are forwarded from the installation level through command safety channels to the Air Force Safety Center. After review by AFSC/SEW (to determine proper application of Q-D standards), the ESP is endorsed to the DDESB for approval.

4.3.1.2. ESPs for war plan operations are forwarded from the installation level through command safety channels to the MAJCOM/CC/CV for approval. Information copies will be sent to AFSC/SEW for review (to determine proper application of Q-D standards). However, if the ESP involves new construction (either for an ES or PES), it will be forwarded from the installation level through command safety channels to the Air Force Safety Center/SEW. After review by AFSC/SEW (to determine proper application of Q-D standards), the ESP will be endorsed by AFSC/SEW to the DDESB for approval. The MAJCOM may choose to combine day-to-day and war plan operations into a single ESP (e.g. using tiered siting); these ESPs will be approved according to paragraph **4.3.1.1.**

4.3.1.3. During MOOTW/contingency/combat operations, the installation will engage in the process of explosives site planning to ensure Q-D standards are met. The Q-D standards of DOD 6055.9-STD, Chapter 10, may be used if Q-D standards of this manual (or other Service criteria if designated by Combatant Command procedures) cannot be met. An ESP should be prepared as soon as possible and approved in accordance with Combatant Command procedures. If a MOOTW/ contingency/combat operation is projected to last longer than 12 months, the ESP will be forwarded through command safety channels to the Air Force Safety Center prior to the 12-month mark. After review by AFSC/SEW (to determine proper application of Q-D standards), the ESP is endorsed to the DDESB for approval.

4.3.2. Tenant units forward ESPs through the host installation and command safety channels. In cases where the host exposes a tenant facility, the host MAJCOM will obtain agreement of the tenant MAJCOM before processing the site plan. When a US Air Force unit is tenant on an Army, Navy or Marine base, request formal site plan approval through that service. The site plan must meet the Q-D requirements of this regulation in addition to all host agency criteria. Submit an information copy of the site plan request through command safety channels to HQ AFSC/SEW.

4.3.2.1. Inter-service Installation Coordination. In cases where an Air Force PES generates an explosives IBD clear zone encroaching onto an adjacent DoD services installation, the local Air Force wing responsible for submitting the site plan will obtain written acknowledgement from the exposed service component SE and CE equivalent offices for inclusion with the site plan submis-

sion package. It will be up to the acknowledging agency to update their maps to reflect the Air Force explosives clear zone for their future planning purposes. See paragraph **3.2.1.1.** for additional guidance. The MAJCOM and HQ AFSC will coordinate with the applicable service component equivalent prior to requesting DDESB site plan approval.

4.3.3. MAJCOM weapons safety staffs must review subordinate units' site plans (for day-to-day and war plan operations, and MOOTW/contingency/combat operations which exceed 12 months) for accuracy and compliance with the standards in this manual. MAJCOMs will then submit original and one copy of the ESP to HQ AFSC/SEW. Include a MAJCOM safety endorsement stating approval along with any changes, modifications or specific precautionary measures considered necessary.

4.3.3. (PACAF) All site plans will be forwarded through the NAF/SEW for review prior to submission to PACAF/SEW. Units not using Assessment System for Hazard Surveys (ASHS) will submit an electronic Microsoft Word copy of the transmittal letter and AF Form(s) 943; and an electronic version of the map. Map must be to scale or scalable under the program (i.e. AutoCAD). It is preferred that all supporting material be submitted electronically, if possible. Units will submit the original and two copies of site plan supporting materials if these documents are not available electronically.

4.3.4. If planned explosives facilities involve biological and chemical fillers, liquid propellants, toxic gases, sonic hazard areas, any form of electromagnetic radiation affecting health (including radioactive sources and microwave generators) and industrial x-ray, the MAJCOM will forward an information copy of the ESP to the Office of the Surgeon General, 170 Luke Avenue, Suite 100, Bolling AFB MD 20332-5113.

4.3.5. Do not start construction on a project requiring an explosives site plan until approval is granted by the DDESB. For site plans covering day-to-day operations, where no construction is involved, do not start explosives operations or non-explosives operations within explosives clear zones until the site plan is approved at MAJCOM level. The Combatant Commander may authorize explosives operations or construction pending siting approval for operations in support of or in expectation of actual MOOTW/contingency/combat operations.

4.4. Siting a Potential Explosion Site (PES). Locations on an Air Force installation containing explosives and ammunition normally are authorized by an approved ESP. (Exceptions are noted in paragraph **4.6.**) This includes aircraft parking locations where aircraft may be loaded with ammunition and explosives. Submit new explosives site plans if the quantity of explosives at a PES increases or a more hazardous explosives HC/D is introduced. The installation will maintain DDESB approved ESPs for day-to-day operations, and MOOTW/ contingency/combat operations which exceed 12 months. The installation will maintain MAJCOM approved ESPs for war plan operations. The installation will maintain Combatant Command approved ESPs for MOOTW/contingency/combat operations. Dispose of ESPs in accordance with AFMAN 37-139, *Records Disposition Schedule*.

4.5. Siting a Non Explosives Exposed Site (ES). (NOTE: An ES may be either explosives or non-explosives, this paragraph addresses non-explosives locations only.) Submit an ESP for new construction of non-explosives facilities inside explosives clear zones for day-to-day operations, war plan operations, and MOOTW/contingency/combat operations which exceed 12 months. A unit may or may not have an ESP on record for every non-explosives ES. If the site plan has been discarded or lost, re-submission is not necessary if the ES is identified on all ESPs for PESs which hazard it. For example, you do

not have a site plan for a maintenance hangar inside a clear zone, yet the hangar is identified on site plans for the PESs which encompass it; resiting the hangar is unnecessary.

4.6. Specific Situations not Requiring Site Plan Submission. Do not submit site plans for the following:

4.6.1. Licensed explosives facilities, hung ordnance areas, arm/dearm areas, hot pit refueling areas not used as a parking area, and aircraft loaded with installed explosives such as egress items, life support, defensive flares or spares (see paragraph 3.25.6.).

4.6.2. Vehicle inspection stations, and transportation change of mode operations to include roll on/off operations not involving lifting. Off-installation MILVAN/ISO container transfer involving highway and rail modes only, where containers are not stored and no other operations are performed, do not require site plans.

4.6.3. Activation of simulators and smoke producing devices in single or small quantities (individual packages) when used in conjunction with readiness inspections and training exercises. See paragraph **2.15.** for usage guidance.

4.6.4. Unmanned non-explosives miscellaneous structures that have a Q-D requirement of fifty feet or less do not require an ESP, even if new construction is involved.

4.7. Facility Modifications or Change in Use. Existing facilities may be modified as needed to meet changing mission requirements. If the modification increases the required quantity-distance separation, or increases the overall floor space, such as room additions, an ESP is required (except during the first 12 months of a MOOTW/contingency/combat operation). MAJCOM and unit safety staffs must work closely with civil engineers and users, to ensure safety standards are not compromised. The following rules apply to these modifications:

4.7.1. Modifications of facilities not covered by a waiver or exemption. These actions may be approved at MAJCOM, or delegated to a subordinate level provided the following rules are observed:

4.7.1. (PACAF) The Wing Weapons Safety office can approve modifications that observe the rules identified in **4.7.1.** thru **4.7.1.5.**

4.7.1.1. Modifications must not cause additional hazards or reduce the effectiveness of built-in safety features of the building.

4.7.1.2. The facility and its occupants/contents must be mission essential and related to the potential explosion site. For example, if a maintenance and inspection facility, sited at K18 is to be modified, a site plan will not be needed if only K18 authorized people are exposed after the modification.

4.7.1.3. The modification must not change the nature of the operations or cause additional hazards. For example, the modification of a nuclear maintenance facility to handle conventional munitions would require a site plan.

4.7.1.4. The modifications must not require congressional, NATO, or host nation funding.

4.7.1.5. Limit modifications to internal areas only.

4.7.2. Modifications of facilities under waiver or exemption. Facilities covered by a waiver or exemption will require AFSC review. The final approval authority will be determined on an individual basis,

but will depend primarily on the nature of the exposure and the original approval level of the waiver or exemption. SAF review will be necessary on all requests for modifications involving waivers or exemptions granted at that level.

4.7.3. Facility use changes that result in a different, or more hazardous operation, within the facility or site, requires new site plans. Examples would include converting a conventional bomb build up facility to a missile assembly and checkout operation, which would change the nature of the operation and the necessary safety precautions.

4.7.4. Increased storage at existing facilities, which cause increases in clear zone size, will also require new ESPs.

4.8. Approval Levels for Specific Explosives Site Plans. Except as identified below, the DDESB is the final approval level for all ESPs covering day-to-day operations, except those with waivers or exemptions (see paragraph **4.9.**), including Government Owned Contractor Operated (GOCO) facilities and Contractor Owned Contractor Operated (COCO) facilities on government land.

4.8.1. MAJCOMs approve the following sites. Format for siting approval will be determined by MAJCOM.

4.8.1.1. Disposal ranges sited on weapons ranges.

4.8.1.1. (PACAF) A routine site plan package will be processed and forwarded for approval by PACAF/SEW.

4.8.1.2. Aircraft battle damage repair sites not in clear zones and using 2 ounces or less of explosives packed inside a length of steel pipe. See paragraph **3.26.**

4.8.1.2. (PACAF) An ORM analysis will be accomplished for each area identified, to include the specifics of the training and a detailed list of the explosives items to be used. The installation commander will approve this analysis. The Wing Weapons Safety office will forward one copy to NAF for review prior to submission to PACAF/SEW and will maintain one copy locally.

4.8.1.3. PRIME BEEF or other training areas using flares, simulators, and smoke producing devices (HC/D 1.2.2, 1.3 and 1.4 only) not within an established clear zone. This applies to locations of recurring training, and not to exercise support activities, that move each time, in accordance with exercise scenarios; required distances will be documented in OIs or other applicable written guidance for exercise support activities that don't have a fixed location.

4.8.1.3. (PACAF) An ORM analysis will be accomplished for each area identified, to include the specifics of the training and a detailed list of the explosives items to be used. The installation commander will approve this analysis. The Wing Weapons Safety office will forward one copy to NAF for review prior to submission to PACAF/SEW and will maintain one copy locally.

4.8.1.4. Installation of Weapons Storage Vaults (WSVs) in site approved Hardened Aircraft Shelters. (See paragraph **3.38.**)

4.8.2. Contractor Owned Contractor Operated (COCO) facilities on non-government land. The Procuring Contract Officer (PCO) approves Explosives Site Plans for Air Force contracts involving explosives or ammunition. ESPs are prepared and submitted by the contractor. These ESPs need not be forwarded to either HQ AFMC, the Air Force Safety Center, or the DDESB. The installation weap-

ons safety officer evaluates the ESP and provides approval or disapproval recommendations to the PCO.

4.8.3. The DDESB approves ESP's for Government Owned Contractor Operated (GOCO) facilities and Contractor Owned facilities on government land.

4.8.4. All ESP's involving contractors must be reviewed and approved through the Defense Plant Representative Office (DPRO), Administrative Contract Office (ACO) and the Designated Acquisition Commanders (DAC) safety office prior to AF processing.

4.9. Site Plans Involving Exceptions to Explosives Safety Standards. All ESPs will include those exposures not meeting Q-D standards. ESPs for day-to-day, combined day-to-day and war plan (e.g., tiered siting), and MOOTW/ contingency/ combat operations (exceeding 12 months), with exemptions or waivers, will be approved by AFSC/SEW while the waiver or exemption is approved IAW **Chapter 5** of this manual. ESPs for war plan operations with exemptions or waivers, will be approved by the MAJCOM/CC/CV while the waiver or exemption is approved IAW **Chapter 5** of this manual; information copies will be sent to AFSC/SEW for review (to determine proper application of Q-D standards). See paragraph **3.8.9.** for guidance when explosives content of host nations facilities may be hazarding US Air Force facilities and personnel.

4.10. Tiered Siting and Risk Management. Tiered siting is useful when the explosives content of a PES varies because of operational requirements. Under this concept, it is frequently possible to take management actions (compensatory measures) to protect or move resources and people before the introduction or increase of explosives. Typically, explosives siting problems are encountered around a flightline PES where lack of real estate coupled with high concentrations of people, facilities, and equipment make compliance with Q-D standards difficult.

4.10.1. Tiered Siting. Tiered siting is a planning method available to commanders, with MAJCOM approval, during periods of increased explosives activity such as exercises or MOOTW/contingency/ combat operations. The commander may change the nature of exposed sites before allowing or increasing explosives at a PES. In a tiered system a PES may have a different sited weight for exercise, training, evaluation or MOOTW/contingency/combat operations. The concept is not limited to these situations, and may be exercised at other times depending on local conditions. To maximize protection under a tiered siting approach, the responsible commander publishes procedures to ensure removal of critical resources and personnel at an ES prior to increasing explosives weights.

4.10.2. Procedures for Tiered Sitings. Determine the NEW required at each PES and the level of protection for each ES at each tier (e.g., day-to-day, exercise, inspection). In instances when the required level of protection cannot be met, determine if compensatory measures, such as evacuation of personnel, are a viable option.

4.10.3. Documenting Tiered Management Actions. Use base OPlans, OIs, agreements, base supplements or other appropriate publications to document tiered actions. The publication must specify:

4.10.3.1. The organizations responsible for implementing risk reduction actions.

4.10.3.2. Conditions under which risk reduction actions will be directed and when they will take place.

4.10.3.3. Critical resources and personnel to be relocated.

4.10.3.4. Critical equipment and supplies to be protected or relocated.

4.10.3.5. Procedures to ensure the ESP is evaluated on a recurring basis.

4.10.4. Submitting Tiered Explosives Site Plans. Use the general guidance in paragraph **4.11.2.** when submitting tiered site plans. Use the maximum proposed explosives quantities for preparing the PES/ES paired relationship listing required in paragraph **4.11.5.6.** Specify the document used in paragraph **4.10.3.** above; it is not necessary to include it in the site plan. Assign a separate site plan number for each tier in accordance with **Attachment 4**, paragraph **A4.2.1.4.**

4.10.5. A management plan that assigns responsibilities and roles; beginning with the tiered site planning and control requirements and extends through the activity, until the operations return to normal. For existing construction: Under all tiers, evacuate personnel from an ES falling within the arc generated by the increased NEW in a PES. An approved waiver or exemption is required if the ES cannot be vacated.

4.11. Explosives Site Plan Development. The Weapons Safety office is instrumental in the explosives site plan development process beginning with the initiation of the concept development phase. The civil engineer or facility user notifies safety as soon as a need is identified to build, modify, expand, or change the use of any PES or ES. Weapons safety determines the need for an explosives site plan and solicits the information to prepare the request. The civil engineer assists safety by providing current maps or drawings and supplies facility design information such as wall construction, grounding, technical facility design assistance, and lightning protection information. Occupied facilities within an existing or proposed explosives inhabited building Q-D arc having glass panels will receive a glass breakage personnel hazard risk assessment as part of the site plan process. When glass panels are necessary and the risk assessment determines a glass hazard will be present, blast resistant windows must be used. The framing and/or sash of such panels must be of sufficient strength to retain the panel in the structure. New construction will have windows equal to the strength of the walls in terms of withstanding rated psi pressure. Personnel hazards from glass breakage can be minimized by means such as building orientation and/or keeping the number of exposed glass panels and panel size to a minimum. The MAJCOM must approve any facility not meeting this standard.

4.11.1. Preliminary Versus Final Safety Review. When submitting an ESP for new construction and design details are incomplete, request preliminary site approval for the project. Preliminary approval generally addresses Q-D relationships and authorizes civil engineering (CE) planning activities to continue. Final DDESB approval addresses safety features, such as facility designs, protective measures, and coordination of operations to be conducted, and is necessary before construction begins.

4.11.2. Preparing the Explosives Site Plan Package. Include all the information needed for the reviewer to determine whether or not DoD and Air Force explosives safety requirements are being met. The exact contents of the package may vary depending on the operation/facility to be sited. For some sitings, a transmittal letter containing pertinent information and a map, is all that is necessary for reviewers to understand the intent and grant approval. Other packages may require detailed drawings, engineering analysis, commander certifications or additional documents needed to verify compliance with applicable explosives or other safety standards.

4.11.3. The Transmittal Letter. The transmittal letter accompanying the ESP is important for getting a site plan successfully reviewed and approved. Generally, all aspects of the siting should be explained; attempt to answer any questions before it is raised. Personnel reviewing the ESP may not be familiar

with the base or operation, including unique terminology, and do not know the mission or specific circumstances.

4.11.3.1. Begin the letter by explaining the purpose of the submission, for example "Request routine processing for subject site plan for preliminary approval." Identify whether the ESP supports day-to-day operations, war plan operations, day-to-day and war plan operations, or MOOTW/contingency/combat operations.

4.11.3.2. State the reason(s) for the request, for example "to construct a new maintenance and inspection facility," or "to increase the NEW at an existing above ground magazine."

4.11.3.3. When the ESP replaces an existing ESP include a cancellation statement, for example "The modification to this facility cancels ESP AFMC-Hill-85-S7."

4.11.3.4. State whether or not all explosives safety criteria will be met. If the siting has any unique characteristics, explain what criteria is being applied, and the basis for the application. Describe compensatory measures if they are necessary to meet Q-D standards. To understand compensatory measures see paragraphs **4.10.** and **5.2.6.** Installation commanders must sign ESPs containing compensatory measures.

4.11.3.5. For ESPs involving new construction, include the project identification and Programming, Design, and Construction (PDC) number.

4.11.3.5. (PACAF) Provide the project number from the Automated Civil Engineer System - Project Management (ACES-PM).

4.11.3.6. Discuss any future plans that may impact this siting. State that the Base Facilities Board has reconciled this particular site plan with the base comprehensive plan. Provide meeting minutes, dated reference or written record of reconciliation.

4.11.3.6. (PACAF) Documentation is required which shows installation commander intent to approve the facility siting as shown pending DDESB approval of the explosive siting. An installation commander approved facility site plan marked "final approval pending DDESB explosive site approval" is sufficient.

4.11.3.7. Explain the format being used to record the required information. For example, "the attached AF Form 943 and map show all the exposures and required separations."

4.11.3.8. To request expeditious processing action, include the following information:

4.11.3.8.1. On the subject line of the memorandum state: "Request for EXPEDITIOUS processing of Explosives Site Plan (ESP) [include complete site plan number]." Explain in the site plan transmittal letter (either the unit's or the MAJCOM's) the reasons why expeditious processing is necessary. MAJCOMs will cite page/paragraph of the unit's package that justifies the urgency.

4.11.3.8.2. Date when approval is needed.

4.11.3.8.3. Proposed contract award date, if applicable.

4.11.3.8.4. Reasons for expeditious processing must show sufficient mission impact to warrant the review. If not, the site plan will be reviewed according to the routine processing time which takes approximately 60 days.

4.11.3.8.5. Staff agency points of contact in event clarification is required.

4.11.3.8.6. MAJCOM/SE must approve/submit all requests for expeditious processing.

4.11.3.8.6. (PACAF) Wing/SE and NAF/SE must coordinate on all requests for expeditious processing.

4.11.4. Maps and Drawings. Submit a map which clearly shows all the PESs and ESs making up the site plan. Computer generated drawings are acceptable provided they have the same type of information normally included on a typical base map. Use 1”= 400’ (or similar metric) scale. To enhance clarity or show precise measurements, use a larger (1”=200’ or 100’) scaled map. Details such as the specific points of measurement, actual and required distance, and NEWs are encouraged. When there is reasonable doubt about the accuracy of the mapped location, it is the responsibility of all participants in the explosive siting process to define a locally acceptable method for determining the measurement accuracy required between the PES-ES locations. If the base boundary is not shown on the map, the transmittal letter must certify the relationship of the clear zone to the base boundary

4.11.4. (PACAF) When the accuracy of maps is in question, use the Common Installation picture from GeoBase, GPS coordinates, or other accurate means and state its use in the cover letter.

4.11.4.1. When siting a PES, show all exposed sites within IBD of the PES. When there is an evaluation zone larger than the IB clear zone of the PES being sited show the evaluation zone (with dashed line) and the PESs in it. When siting an ES, show the evaluation zone (dashed line) with all PESs. See **Table 4.1.**, **Figure 4.1.**, and **Attachment 5**.

4.11.4.2. When siting multiple PESs show the IBD clear zone for each PES. Show a blended clear zone if it provides additional clarity.

4.11.4.3. Use color coding to simplify and speed the review process. Identify the PESs in red and ESs in green. Highlight the clear zone lines in red.

4.11.4.4. Include site plan number, title and scale on each map, and the AF Form 943, if used.

4.11.4.5. For final approval, submit construction drawings showing applicable safety and protective features directly relating to the facility. These drawings must show, as a minimum, the general details. Safety and protective features include dividing walls, vent walls, firewalls, roofs, operational equipment, ventilation systems and equipment, hazardous waste disposal systems, lightning protection system, static grounding systems, process equipment, windows, floor layout and auxiliary support structures as well as general construction materials. Also provide drawings, specifications, rationale and base security manager approval of physical security designs when the design is different than standard construction methods used for explosive facilities. Do not submit drawings for landscapes or pavements, etc. Narrative descriptions or drawings and specifications are unnecessary for facilities previously by the DDESB. These facilities must be identified by a drawing number.

4.11.4.5.1. Lightning protection system drawings must include a top view of the facility showing the locations of the elements of the lightning protection system, such as air terminals, masts, overhead wires, grounding electrode system and a description of the surge protection. Include at least a front and side view of the facility showing the zone of protection required by NFPA 780, Section K (100 feet rolling sphere), unless the rebar in an igloo is used as part of the lightning protection system. Provide additional views, as necessary, after considering all possible placements of the rolling sphere concept. The drawings must contain dimensions. Drawings should show that the lightning protection system meets the 100-foot striking dis-

tance criteria (except for igloos where the rebar is used in lieu of air terminals). Include documentation of the commander's risk acceptance for submissions involving LPS exceptions (see paragraph **2.54.1.8.**).

4.11.4.5.2. For facilities where a distance equivalent protection is claimed, a certified structural engineering analysis is required. It must include relevant computations, and conclusions.

4.11.4.6. Show topographic contours or features, such as natural barricades (i.e. dense forest) or hills, if they are pertinent to the application of Q-D.

4.11.5. Siting a PES. The following information must be included. Other information may be required for unique explosives locations.

4.11.5.1. Description. Include construction drawings as identified in paragraph **4.11.4.5.** ***NOTE***: Narrative descriptions or drawings and specifications are unnecessary for facilities pre-approved by the DDESB and identified by a drawing number. . If definitive drawing numbers are not listed in Attachment, or elsewhere in this standard, contact MAJCOM/SEW for more details. HASs may be referred to by type, (i.e., 3rd GEN, Korea, etc).

4.11.5.2. Weight. The maximum net explosives weight for QD (NEWQD) authorized at the PES in terms of maximum credible event (MCE). Include NEW for each class division of explosives. For multiple room facilities show, NEW, HC/D for each room where explosives will be present. Where IM is not provided between rooms/cubicles, show overall NEW for the facility. If explosives are unpackaged see paragraph **3.4.2.2.**

4.11.5.3. User. The organization whose assets or people will be in the facility. Include the branch of service if other than the Air Force is involved. Include the MAJCOM, Wing, Squadron, and show unit designations by number and alpha designation.

4.11.5.4. Number of Persons. For explosives operating locations, include the average number of persons who will be in the facility during normal duty hours. Consider the number of persons present during exercises. It is not necessary to distinguish between military and civilian unless the civilians are not employed or contracted by the Department of Defense.

4.11.5.5. Special Features. The type, description and location of barricades or other features that effect the required separation distances.

4.11.5.6. PES/ES Relationship Evaluation. It is important to ensure facilities or locations being sited, whether explosive or non-explosive, within an explosive clear zone complies with Q-D requirements. This is accomplished by conducting a potential explosion site/exposed site (PES/ES) relationship evaluation. Each relationship between a PES and an ES is called a “pair”. This evaluation will be conducted using the following requirements:

4.11.5.6.1. Document the evaluation on an AF Form 943 as shown in **Attachment 4** or on other formats authorized in paragraph **4.13.**

4.11.5.6.2. Describe each PES or ES in terms of function as stated in **Table 3.3.**, user, number of occupants, most restrictive Q-D required, and the actual distance between the PES/ES pair.

4.11.5.6.3. A facility or location where explosives will be present must be evaluated as both a PES and an ES. This is a two-way evaluation between the pair and the most restrictive distance between the pair is documented. A non-explosive ES is a one-way evaluation from surrounding PESs to the ES.

4.11.5.6.4. A PES will always have an explosives clear zone surrounding it based on the largest Inhabited Building Distance (IBD) of the sited Hazard Class/Divisions (HC/Ds) in the PES. All exposures within this IBD must be evaluated. An ES will always have an "Evaluation Zone" (EZ) surrounding it. This distance is based on the Q-D type of the ES, e.g., Operating Location, Combat Aircraft Parking Area and the applicable K Factor or minimum distances of HC/Ds in the PES. To determine the size of the EZ, when a K Factor is required, use the largest amount of HC/D 1.1 authorized in a single PES within the established clear zone (maximum of 500,000 pounds). See **Table 4.1.** For other HC/Ds use the minimum prescribed distances found in the appropriate tables.

4.11.5.6.5. An ES Evaluation Zone may or may not be entirely within the explosive clear zone of a PES proposed siting. For magazines the EZ will normally be within the IBD of a PES being sited. In these cases the evaluation of exposures within the IBD of the PES being sited will satisfy the two-way evaluation of the PES/ES pairs. When the EZ exceeds the IBD evaluate only the PESs between the IBD and EZ. See **Figure 4.1.** for examples of Evaluation Zones.

4.11.5.6.6. When an evaluation zone does not exceed the IB clear zone or if there are no PESs in an evaluation zone, state this in the cover letter.

4.11.5.7. Map. Include a base map or drawing, as outlined in paragraph **4.11.4.** above, that accurately depicts the proposed PES, its IBD clear zone, and (as a minimum) all ESs within its clear zone.

4.11.5.8. Distances. Include the required and actual separation to each ES, in feet, and the appropriate K-factor, minimum distance or rule being applied.

4.11.6. Siting an Non-Explosives ES. For requests to site non-explosives ESs, the following information must be included. Other information may be required for unique facilities.

4.11.6.1. Description. A detailed description of the facility to include: type of construction, function, and location and type of windows. See paragraph **4.17.8.** for additional requirements for windows or glass panels.

4.11.6.2. User, Number of Persons & Special Features. Use the same guidance as in paragraphs **4.11.5.3.** to **4.11.5.5.**

4.11.6.3. PES Relationship Listing. Provide a list of all PESs within the evaluation zone of the non-explosive ES being sited. The evaluation zone is determined by the type of Q-D criteria required to the non-explosive ES being sited from surrounding PESs. See paragraph **4.11.5.6.** and **Table 4.1.** Describe these PESs in terms of paragraph **4.11.4.** NOTE: It may not be necessary to identify all PESs in some circumstances. For example unmanned miscellaneous structures requiring 50 feet separation from any PES can be sited by merely identifying the nearest PES.

4.11.6.4. Distances. Include the required and actual separation to each PES, in feet, and the appropriate K-factor or rule being applied.

4.11.7. Using AF Form 943. This form is one possible tool to document most of the information required for a site plan package. Use guidance in **Attachment 4** to complete the AF Form 943. This form is ideally suited for siting one PES or one ES. If multiple PESs are sited simultaneously, such as a cluster of hardened aircraft shelters, or a row of storage pads, an alternative format may be desirable. *The primary objective is to present the required information, clearly and concisely so reviewers can*

verify compliance with the explosives safety standards. Alternative formats to the AF Form 943 are described in paragraph **4.13.**

4.12. Computerized Site Planning. The use of computer generated forms or databases expedites the site-planning process and allows drafts of ESPs to be forwarded to the next level of review for preliminary review or used as a training tool. The instructions in **Attachment 4** match the AF Form 943 on the Air Force Electronic Publications Library (AFEPL).

4.13. Other Explosives Site Plan Format Options. Formats other than the AF Form 943 which present the required information are acceptable.

4.13.1. Matrix Method. A grid with PESs along the top and ESs down the side can easily be used to show all possible relationships between any number of PESs and ESs.

4.13.1.1. Advantages of Matrix Method. This method is best suited for siting an entire area such as a flightline or munitions storage area where numerous PESs exist. It significantly reduces the amount of paperwork since each ES is entered only once as opposed to numerous repeated entries on AF Form 943s. A completed matrix ensures Q-D is examined in both directions.

4.13.1.2. Disadvantages of Matrix Method. Letter or legal size paper usually is not large enough to accommodate the matrix. A computer generated table cannot easily be printed. Creating the matrix on poster size paper can be time consuming and difficult to copy.

4.13.2. Overlay or Template Method. A scaled drawing of the PES and its various clear zones (IM, IL, PTR, IB) on transparency can be overlaid on a map to determine quickly whether or not Q-D standards are being met. PES and ES descriptions are listed on a separate sheet of paper. Color coding ESs according to the category of required Q-D further simplifies the package. For example all related facilities would be one color, PTR another color, and so on. Then by viewing through the template and noting the colors, Q-D is verified.

4.13.2.1. Advantages of the Overlay or Template Method. This method is best suited to site numerous PESs which are identical in size and NEW, such as hardened aircraft shelters or standard igloos. A massive package of AF Form 943s can be reduced to four items: (1) Map; (2) Template; (3) Listing of ESs; and (4) Listing of PESs. The time required to review an ESP using this format is substantially reduced.

4.13.2.2. Disadvantages of the Overlay or Template Method. This method depends on graphic aids. It requires accurately scaled templates and drawings which the civil engineer may be able to produce. Templates must show all possible clear zones. Without computer assistance, this method may be too time consuming.

Figure 4.1. Evaluation Zone Examples.

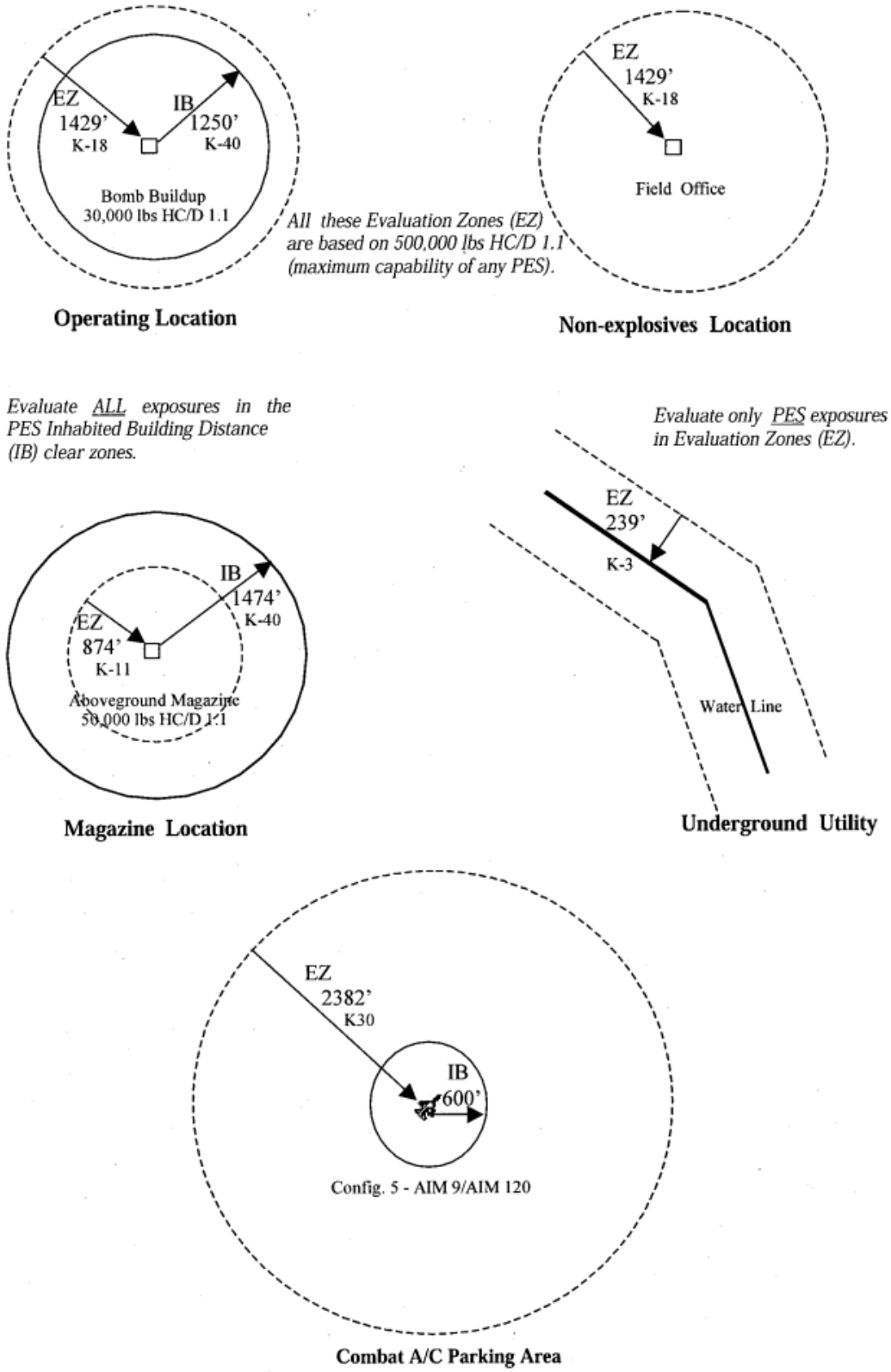

Table 4.1. Evaluation Zones for Exposed Sites.1

Exposed Site	Evaluation Zone (feet)
Earth Covered Igloo	874(2)
Above Ground Magazine	874(2)
Barricaded Module	874(2)
Operating Location	1429
Remote Operating Location	1429
Combat Aircraft Parking Area	2382
Aircraft Explosives Cargo Parking Area	874(2)
Flightline Munitions Holding Area	874(2)
Hardened Aircraft Shelter	1429
Defensive Missile Battery	874(2)
Airfield Military Use Only Runway	2382
Airfield Military Use Only Taxiway	2382
Airfield Joint, Military/Non Military Use Runway	3969(4)
Airfield Joint, Military/Non Military Use Taxiway	2382
Non-Explosives Loaded Aircraft	3969(5)
Passenger Load/Unload Area	2382
Facilities For Combat Aircraft Alert Forces	1429
Above Ground Utilities	2382
Underground Utilities	239
Above Ground Bulk Pol Facilities	3969(4)
Public Traffic Route	2382
Recreation Area/Facility	2382
Related Facility	1429(3)
Inhabited Building	3969(4)

NOTES:

1. Evaluation zones are based on 500,000 pounds NEW at the largest K factor for the applicable ES. Smaller evaluation zones may be used based on the largest amount of HC/D 1.1 authorized in a single PES within the established clear zone.
2. Evaluation zones that are smaller than the IB clear zone of the PES being sited have no effect because all the facilities within that IB zone are already listed.
3. Related facilities in the storage area may not be related to combat parking areas. In addition to the PESs in the evaluation zone, list those PESs that have an IB relationship to the ES.
4. Evaluation zones for IB targets are used only to determine if an ESP is required. List ESs with inhabited building criteria only if they are in violation.

5. Smaller evaluation zones may be established by MAJCOMs, see **Table 3.3.**, Note 43.

4.14. Siting for Contingencies, Peacetime Deployments or Exercises Simulating Contingencies. For deployment planning see paragraph **1.4.** For associated site plans see paragraphs **4.3.1.** through **4.3.1.3.**

4.15. Establishing and Maintaining IBD Clear Zones.

4.15.1. Comprehensive Plan Maps C-1, D-8, E-9 and M-3 (as applicable) will reflect the explosives IBD clear zones for day-to-day and war plan ESPs. For tiered siting (see paragraph **4.10.**) only the largest IBD clear zone need be shown except on the D-8 which must show the clear zones for all tiers.

4.15.2. The weapons safety manager (WSM) will assist the civil engineer in determining the explosives IBD clear zones required on appropriate base maps. Clear zones must reflect the DDESB or MAJCOM approved net explosives weights (NEW).

4.15.3. IBD clear zones on the comprehensive plans need not be changed when clear zones are expanded by short-term (1 year), non-recurring waiver situations.

4.16. Reduction or Re-designation of Clear Zones. When a permanent reduction or re-designation of an explosives clear zone is required, a coordinated (installation safety, civil engineering, and logistics) request letter is prepared and submitted to the host MAJCOM Safety Office through the respective MAJCOM activity offices. Requests must be signed by the installation commander and include justification for the reduction. To better evaluate the impact if the reduction is not approved, include a clear zone map showing both the old and proposed clear zones. No actions will be taken to redraw base maps or construct facilities until MAJCOM approval is received.

4.16.1. Temporary Reduction or Re-designation of Clear Zones. Temporary reduction or re-designation of existing explosives clear zones (2 years or less) may be desirable to accommodate a temporary facility change-of-use or the temporary introduction of non-related activities into the clear-zone without the need for explosives waivers or exemptions. Such actions will not be used as a tool to alleviate the requirement to obtain siting approval for other permanent facilities built within the permanent clear zone.

Section 4B—Construction Considerations for Explosives Facilities

4.17. General Munitions Facility Design Information. Design procedures and construction techniques for explosives facilities must provide the required protection for personnel, essential material and equipment. TM5-1300, *Structures to Resist the Effects of Accidental Explosions* and Military Handbook 1013/1A, *Design Guidelines For Physical Security Of Facilities***,** should be used in planning and designing explosives facilities. Managers must carefully evaluate their need for explosives facilities and ensure construction techniques satisfy safety and security requirements. The following are examples of items that should be considered. For licensed facilities see paragraph **2.35.**

4.17.1. Provide blast doors and dividing walls only where high explosives are involved and protection of personnel and high-value non-explosives equipment**,** or preventing propagation is desired.

4.17.2. Blast doors and dividing walls should be provided only where high explosives are involved and protection of personnel or preventing propagation is desired.

4.17.3. Earth-covered, igloo-type structures are preferred for storing explosives. See "*Earth-Covered Magazine*" in appendix 1 or contact AFSC/SEW for a listing of approved earth covered magazine (ECM) drawings.

4.17.4. Construct exterior walls and roof coverings of non-combustible materials.

4.17.5. Construct roofs and walls, except for specifically designed containment and protection purposes, as light in weight (weak) as practicable. Construct facility features to allow venting of an internal explosion with the minimum number of large fragments. Exceptions are made where design requirements such as the following must be met: fire walls, substantial dividing walls, special roof loading, external overpressure protection, and specialized manufacturing facilities.

4.17.6. Design facilities specifically for class/division 1.3 materials using "Hazard Division 1.3 Passive Structural Systems Design Guide."

4.17.7. Provide magazines with appropriate means of air circulation or dehumidification, vermin-resistance, and condensation drainage from the storage facility interiors.

4.17.8. Occupied new or modified facilities within an existing or proposed explosives inhabited building Q-D arc having glass panels will receive a glass breakage personnel hazard risk assessment as part of the site plan process. When glass panels are necessary and the risk assessment determines a glass hazard will be present, blast resistant windows must be used. The framing and/or sash of such panels must be of sufficient strength to retain the panel in the structure. Personnel hazards from glass breakage can be minimized by means such as building orientation and/or keeping the number of exposed glass panels and panel size to a minimum.

4.18. Interior Finishes and Floors for Explosives Handling Facilities.

4.18.1. Non-combustible material will be used for interior surfaces of buildings (Military Handbook 1008).

4.18.1.1. Where hazardous operations (paragraph **2.46.**) exist, interior surfaces should also be smooth, free from cracks and crevices, and have joints taped or sealed.

4.18.1.2. If painted, the surfaces should be covered with a hard gloss paint that is easily cleaned. Horizontal ledges which might hold dust will be avoided or beveled to prevent dust collection. Cove bases at the junction of the walls and floor are recommended.

4.18.1.3. If it is necessary to use combustion-supporting materials in the interior of an operating building, treat or cover all exposed surfaces with fire-retardant material.

4.18.2. Conductive non-sparking floors are required where certain exposed explosives and materials are sensitive (easily detonated or ignited) to the uncontrolled discharge of static electricity. A documented MAJCOM-approved technical analysis is required before an alternative electric static dissipating method is used instead of conductive floors.

4.18.2.1. Such floors will be non-sparking. This flooring must be smooth, free from cracks, and of a type that will not develop surface separations, wrinkle, or buckle under operational loads. Do not paint over these floors.

4.18.2.2. Test electrical resistance between the floor and ground according to AFI 32-1065.

4.18.3. Where washing is required, floors must be able to withstand repeated applications of hot water and cleaners.

4.19. Fire Walls in PES Facilities . Fire walls are designed to limit the spread of fire to only one zone of a facility. They are normally extended through the roof of the building to prevent a fire on one side of the fire wall from immediately spreading to the remainder of the facility. Construct proposed fire walls as prescribed in Military Handbook 1008B. Protect any openings through the fire wall as described in the National Fire Protection Association Standard 80, Standards for Fire Doors and Windows.

4.19.1. Two-hour fire walls may be used to provide required separation for compatibility groupings of HC/D 1.4 and up to 100 pounds NEW of HC/D 1.3 munitions.

4.20. Reinforced Concrete Walls. The capability of a 12-inch reinforced concrete wall to prevent simultaneous detonation (IM distance) in an adjacent bay is based on a limit of 425 pounds NEW of HC/D 1.1 explosives, when placed 3 feet or more from the wall (see paragraph **2.41.**). Where these weight and spacing restrictions cannot be met, an engineering evaluation must be made to address the specific conditions according to TM5-1300 criteria to determine the proper wall construction or explosives weight and spacing limitations.

4.20.1. For special weapons, the criteria in TO 11N-20-7, when more restrictive, will be the limiting factor and override the above criteria.

4.20.2. The provisions of paragraph **4.19.1.** apply.

4.20.3. If the 425 pounds NEW HC/D 1.1 limit is not exceeded, these walls may be used to provide the required intermagazine distance separations for compatibility groupings of all types and classes of explosives. The walls at this NEW do not protect personnel on the opposite side of the wall because of spalling. Refer to TM5-1300 and Mil-Std 398 for personnel protection standards.

4.21. Blast Doors. Design blast doors that separate explosives working spaces or storage spaces in existing buildings to meet design definitive drawing specifications. Design these doors to be at least equal in strength of adjacent walls. (See TM5-1300, *Structures to Resist the Effects of Accidental Explosions*, for design factors for new structures). Take care to ensure these doors are not installed as a matter of convenience. Avoid blast doors when a continuous reinforced wall would not unnecessarily interfere with operations.

4.22. Building Exits. One properly located exit is suitable for small operating rooms or cubicles which have substantially constructed walls on three sides.

4.22.1. In larger buildings or rooms, at least two exits remote from each other (regardless of dimensions), will be provided for each operating room or building containing explosives.

4.22.2. If more than eight persons are occupying a room containing explosives, it should have more than one exit or one exit for each multiple of five persons (or fraction thereof).

4.22.3. Exits should be at least 32 inches wide. However, in determining the total number of exits required, available space (in multiples of 32 inches of width) may be considered additional exit units. Exits should be spaced equally about the perimeter of the building.

4.22.4. Exits should be no more than 25 feet, but never more than 75 feet, away from employees working within these facilities. Exits should lead directly outside. Plan each exit to avoid obstructing

the escape of personnel. Avoid, if possible, placing explosives, equipment, and operating materials between personnel and exits.

4.23. Exit Doors. Exit doors in operating buildings will open outward. During operating hours, these doors may be fastened with dead-bolt panic hardware that cannot be operated from the outside. The size of the exit door should never be less than 32 inches by 80 inches high. Do not obstruct exit doors or departure routes.

4.23.1. Except for storage magazines, exit doors should be panel or flush surface type construction.

4.23.2. Vision panels in each door are desirable. The using agency may omit them for security. Vision panels should be in the upper half of the door, not exceed 100 square inches, and glazed with acrylic plastic or equivalent material. They should be of shatter resistant, non-combustible material or slow-burning material of a type that is practically smokeless. See paragraph **4.17.8.**

4.24. Safety Chutes. Safety chutes will be provided as exits from multistory hazardous locations where rapid egress is vital and cannot be otherwise provided.

4.24.1. Supporting members for safety chutes should be made of non-combustible materials and anchored to structural members designed to provide resistance to the effects of an explosion/fire.

4.24.2. These chutes must be provided for work levels above the ground floor. They should be placed on opposite sides of the operation (so that people will not be trapped by a fire between them and a single chute).

4.24.3. Exits to safety chutes will open on a platform at least 3 feet square, equipped with guardrails. The chutes will begin at the outside edge of the platform.

4.24.4. Landings from safety chutes should be located where escape routes will be free from tripping hazards, low guy lines, drains, ditches, or other obstructions.

4.24.5. A manual or automatic tripping device should be installed at or near the entrance to chutes to give an alarm in the operating building and nearby structures. This tripping device may also actuate deluge valves and water curtains in the building or room affected.

4.24.6. Recommended safety chute dimensions and construction are: angle, 40-50 degrees with the horizontal; depth of chute, 24 inches; radius at bottom of chute, 12 inches. The lower end of the chute will not be over 24 inches above the ground. It will have enough of a horizontal run to prevent an injury to the employee because of the rate of fall (induced speed) during the exit.

4.24.6.1. Chutes 40 feet long require 6 feet of horizontal run.

4.24.6.2. The juncture of sections will be well-rounded and must overlap in the direction of travel.

4.25. Emergency Exits and Fire Escapes. Use the American National Standards Institute (ANSI) Safety Code A156.3, Building Exits, and NFPA, Standard 101, Life Safety Code, as a guide in constructing emergency exits and fire escapes.

4.25.1. The rules for emergency exits, including safety chutes for explosives operating buildings, are the same as those in paragraphs **4.21.** and **4.22.**

4.25.2. Exterior fire escapes from a building with two or more stories must be of non-combustible material. They should be separated from the interior of the building by fire-resistant walls. Fire escape

stairs will be arranged so they are exposed to the smallest number of window and door openings. All openings will be protected as required by the NFPA, Standard 101.

4.26. Stairways . Stairways will conform with AFOSH and NFPA Standard 101, Life Safety Code requirements. Open-sided stairways in an explosives building (or in one where a dangerous fire hazard exists) must have handrails at least 42 inches high. It must have mid-railings to preclude falls when vision might be impaired by smoke, injury or when panic might result. Open risers should be avoided.

4.27. Fixed Ladders. Fixed ladders should conform to the ANSI Safety Code A14.3, Construction, Care, and Use of Ladders, and AFOSH Standard 91-22.

4.28. Platforms, Runways, and Railings. Platforms, runways, and railings should conform with AFOSH requirements.

4.28.1. Platforms and runways less than 30 feet long require one stairway or fixed ladder. Those over 30 feet long or more than 250 square feet in area require two stairways or ladders.

4.28.2. Platforms, floor openings, runways, tanks, or open vats comply with AFOSH 91-22.

4.28.3. Permanent railings should be of metal except in those process buildings where metal railings would increase the hazard.

4.29. Passageways. If weather-protected passageways (ramps) are needed between buildings or magazines, they should have suitable fire stops between the buildings.

4.30. Roads, Walks, and Gates.

4.30.1. Good all-weather roads should be provided to, and within, the explosives area.

4.30.2. There is no mandatory safety requirement for more than one personnel gate in the fence around an explosives area. The MAJCOM usually determines how many gates are needed after considering all elements of the situation. Consideration should be given to providing alternate personnel gateways for single event emergency.

4.30.3. Road systems serving groups of magazines or explosives buildings will be arranged without dead ends so that motor vehicles carrying explosives cannot be isolated. To prevent dead ending, interconnecting roads for magazine service roads need only be passable trails adequate to accommodate the typical vehicles used at the installation.

4.30.4. Roads serving a single magazine or explosives processing building (including its service facilities) may dead end at the magazine or building. The road system should be designed to eliminate the need for passing through an intermediate explosives when traveling between one operating area and another, within the same explosives (weapons) storage area.

4.30.5. Walkways and roads at the entrances to or between adjacent operating buildings containing explosives will be hard surfaced or boardwalks. These walkways and roads should be kept free from foreign material. Foot brushes, door mats, or scrapers should be provided at the entrance of each building, except magazines. Special attention will be given to passageways, walkways, and stairs which have been subjected to the effects of inclement weather.

4.31. Windows and Skylights. Inhabited building distances do not protect against glass breakage and the hazards of flying glass. Buildings housing administration areas, shops, and similar areas, separated by inhabited building distance, should not have windows and other large glass areas that face buildings where explosives are manufactured, processed, handled, or stored. See paragraph **4.17.8.** for additional information.

4.31.1. Transparent, shatter resistant, slow-burning plastic that is practically smokeless may be used as glazing if an explosion could cause injury from falling or flying glass. For windows glazed with conventional glass, the hazard from falling and flying glass may be reduced by covering the inside with polycarbonate glazing, or protective window film application. Where plastic are used, the base fire department should note this type construction on prefire plans to facilitate fire-fighting personnel entry in emergency situations.

4.31.2. Windows in buildings having HC/D 1.3 explosives should be large enough to provide for release of pressure in the event of an explosion. The frame or sash should be of a suitable venting type. Shatter resistant-type glazing is recommended.

4.31.3. Skylights will not be used in buildings where explosives or ammunition are processed and should not be used in any buildings in an explosives establishment.

4.32. Drains and Sumps. When lines are required for draining liquid explosives or liquids containing explosive waste, they will be free of pockets and low spots. The drain line will be sloped at least one quarter inch per foot so that explosives will not settle in the drain line. The drain system will include a sump or basin so explosives can be removed.

4.32.1. Bolted sump tanks or other types of construction that allow the explosives to settle in obscure or hidden spaces are prohibited. Avoid any deposition of explosives from sump effluent due to drying, temperature changes, or interaction with other industrial contamination. Use sweeping and other dry-collecting measures to keep explosives which are appreciably soluble in water out of the drainage system.

4.32.2. Sumps will be designed so that suspended and solid explosive material that may settle cannot be carried in the wash waters beyond the sumps. They will be constructed so that the overflow will not disturb any floating solids. The design will allow enough settling time, based on the settling rate of the material and the usual rate of flow. It will allow the collected explosives to be removed easily and allow those which float on water to be retained until they can be skimmed from the water surface.

4.32.3. In all new construction, drains between the source of explosives and the sump will be troughs with rounded bottoms. The drains will have removable, non-sparking, ventilated covers for ease of inspection for accumulated explosives. Waste liquids will not be run into closed drains and sewers.

4.32.4. Drains will be inspected periodically and steps taken to prevent the buildup of explosive deposits. Drains and sewers containing explosive waste will not be connected to the normal sewage systems. All residue from hazardous material clean-up operations is considered hazardous waste and shall be disposed in accordance with AFI 32-7045 and AFPD 32-30.

4.33. Choosing and Installing Hardware.

4.33.1. To reduce the risk of accidental ignition by spark, consider the operational conditions in any hazardous location before choosing and installing hardware. Certain hazards may be sufficient to war-

rant the use of materials that will reduce the possibility of sparking. Therefore, special precautions must be taken for hardware having metal components that are used around exposed explosives.

4.33.2. Secure hardware firmly in place by using locking devices if it might become loose and enter into an explosives mix. This precaution is especially important in manufacturing and renovation operations.

4.33.3. Avoid installing hardware (including pipes and ducts) on light blowout-type walls and roofs. If it is necessary, select materials or items that will not yield heavy fragments in an explosion.

4.34. Tunnels. Tunnels must be drained, ventilated, well lighted, and have at least two exits. Water and steam service lines in tunnels will be lagged with suitable insulation. Tunnels between buildings that contain explosives will be built to resist the shock wave and blast of an explosion. Only authorized personnel will enter the tunnels.

4.35. Powerhouse Equipment. Powerhouse equipment, boilers, engines, and auxiliary equipment will be installed in compliance with the American Society of Mechanical Engineers (ASME), Boiler Code (includes Code for Unfired Pressure Vessels), the National Electrical Code, and other codes, regulations, or standards accepted as standard good practice.

4.36. Refrigeration. Refrigeration equipment must be installed as required by the ANSI Safety Code 89.1, Mechanical Refrigeration.

4.37. Laundries. Laundries should have facilities for washing and flame-proofing uniforms if such clothing is in use.

4.37.1. The facilities will include a safe place to store uniforms and rags that are contaminated with explosives before washing. Sumps will also be provided to remove explosives from waste water. There should be facilities available to test whether the contaminant (particularly any insoluble toxic substance) has been removed. Contact Environmental Management for assistance.

4.37.2. Commercial businesses laundering such articles will be informed of the nature of the explosives contamination and possible dangerous chemical reactions (paragraph **4.37.1.** applies).

4.38. Steam for Explosives Processing and Heating, Operations and Facilities. Steam used to heat operating buildings that contain explosives must never be hotter than 228 ^{o}F (108.9 ^{o}C). Process steam may exceed this if necessary but will not exceed 249.5 ^{o}F (120.8 ^{o}C). (Process steam is steam that is in direct contact with explosives or which, in case of equipment failure, would exhaust directly into contact with explosives or explosive fumes.)

4.38.1. Steam or hot water pipe surfaces in contact with wood, paper, or other combustible materials must never be hotter than 160 ^{o}F (71 ^{o}C). If the hot water pipes and the steam lines are hotter than this, they must be covered and painted with an impervious material or otherwise protected against direct or prolonged contact with these item.

4.38.2. Where a reducing valve is used, a relief valve should be installed on the low pressure piping. The production of superheated steam caused by the throttling action of reducing valves will be prevented by positive means, preferably by using a "water leg" or water column to control steam pressure of 5 psi or less.

4.38.3. Where close control of steam temperature is needed, indicating and recording pressure or temperature gauges should be installed. Such devices should be periodically tested and the test results recorded.

4.38.4. Where circulating hot water is used for heating, the installation and operating conditions will be according to AFJI 32-1057*, Water Heating Systems*.

4.38.5. In explosives handling or storage locations where resistance to ground is high, steam or hot water lines should be grounded where they enter buildings.

4.39. Ventilation. Buildings where dust, fumes, or vapors (having explosive potential) are formed will be passively ventilated, usually at the source of the hazard. Air recirculation through these ventilation systems should not be designed without adequate measures for minimizing (eliminating) static discharge, including during the activation of manual or automated ventilation systems.

4.39.1. Exhaust fans through which combustible dust or flammable vapor pass will be equipped with nonferrous blades (or casting lined with nonferrous material) and approved motors. The entire ventilating system will be bonded electrically and grounded properly. The NFPA, Standard 91, Blower and Exhaust Systems, may be used in the installation of such systems. **4.39.2.** For buildings in which there is explosive dust, an air balance that gives a slight negative pressure within the building is required.

4.39.2. If air conditioning equipment is installed, it should be done as directed in the NFPA, Standard 90A, Air Conditioning and Ventilating Systems, and Standard 90B, Warm Air Heating and Air Conditioning. Exhaust systems will be cleaned thoroughly, serviced on a regular schedule, and a log kept.

4.40. Electrical Equipment. The installation of electrical equipment within an explosives facility (building, magazine, shelter, and so forth) will comply with the National Electrical Code as a minimum, unless specified otherwise in Military Handbook 1008.

4.41. Outdoor Storage Sites. Outdoor storage sites will have a minimal slope, be well drained, and free from unnecessary combustible materials. The dunnage, supporting timbers, or platform on which explosives are stored will be built and placed to prevent falling, sagging, or shifting of the explosives. See specific item TOs.

4.41.1. To ensure stack stability and free circulation of air, adequate dunnage is needed, especially between the stack and an unimproved surface.

4.41.2. Nonflammable or fire-resistant, waterproofed, overhead covers will be provided for packaged explosive items unless the item is contained in packing designed and approved for unprotected outside storage.

4.41.3. There must be at least 18 inches between the top of the stack and the cover. If airspace is kept between the cover and the stacks, the sides of covered stacks may be protected by nonflammable or fire-resistant, waterproof covers.

4.42. Collection of Explosives Dusts.

4.42.1. Vacuum Collection. A "wet collector" that moistens the dust close to the point of origin and keeps it wet until the dust is removed for disposal is preferred. Explosive D should be collected in a dry system. More sensitive explosives (such as black powder, lead azide, mercury fulminate, tracer,

igniter, incendiary compositions, and pyrotechnic materials) may be collected by vacuum in this manner. However, it must be kept wet, with compatible wetting agent close to the point of intake.

4.42.1.1. Vacuum (aspirator) systems must be arranged so each type of explosive is collected separately or so dissimilar hazards (for example, black powder with lead azide) are not mixed. Provision should be made for the proper liberation of gases that may be formed.

4.42.1.2. Vacuum systems used to collect these more sensitive materials should be used only for operations with fuzes, detonators, small arms ammunition, and black powder igniters.

4.42.2. Location of Dry-Type Collection Chambers**.** Dry-type explosive dust collection chambers, except as specifically provided for portable units, should be located outside operating buildings, in the open, or in buildings exclusively for the purpose.

4.42.2.1. There must be a protective barrier between the operating building and the outside location or separate building where the vacuum collection chamber is placed.

4.42.2.1.1. If the chamber contains 25 pounds of explosives or less, this barrier may be a dividing wall located at least 8 feet from the operating building.

4.42.2.1.2. If the chamber contains more than 25 pounds and is separated from the operating building by a 12-inch reinforced concrete wall, the wall must be separated from the operating building by a minimum of intraline distance.

4.42.2.1.3. If the barrier meets the requirements for operational shields or barricades (for the quantity of explosives in the vacuum collection chamber), it will be at a minimum of intraline distance to the operating building.

4.42.2.2. When it is not practicable to locate dry-type vacuum collection chambers outside the operating building, a separate room within the building may be set aside for the purpose. This room must not contain other operations and never be used as a communicating corridor or passageway between other operating locations within the building when explosives are being collected. If more than one collection chamber is to be placed in the room, the room will be subdivided into cubicles. Not more than one collection chamber will be in a single cubicle.

4.42.2.3. Dry-type portable vacuum collectors will not be placed in a bay or cubicle where explosives are present. If they do not contain more than five pounds of explosives, they may be placed outside the building or in a separate cubicle having dividing walls. If they contain more than five pounds, the requirement for stationary collectors will be met.

4.42.3. Location of Wet-Type Collection Chambers. If stationary and portable wet-type collectors do not contain more than five pounds of explosives, they may be placed in operating bays or cubicles. If placed in separate cubicles, the limits for each one may be 15 pounds. If they contain more than 15 pounds, the location requirements for dry collectors will apply.

4.42.4. Design and Operation of Collection Systems. Collection systems and chambers will be designed so that metal parts do not pinch explosives or explosive dusts. Pipes or tubes through which the dust travels should have flanged, welded, or rubber connections. Threaded connections are not allowed. The system will be designed to reduce accumulation of explosive dust in parts other than the collection chamber.

4.42.4.1. Long radius turns (centerline radius at least four times the diameter of the duct) will be used in the duct work. The number of points of application of vacuum should be kept to a mini-

mum. Each room requiring vacuum collection should have a separate exhaust line to the primary collection chamber. Not more than two bays will be serviced by a common leader to the primary collection chamber. Wet primary collectors are preferred.

4.42.4.2. The vacuum line should be as short as possible from points of application of vacuum to the wet collectors. The number of wet primary collectors serviced by a single secondary collector should be kept at a minimum. Not more than two dry primary collectors should be connected to a single secondary collector (wet or dry-type). If an operation does not create an airborne concentration of dust, a manually operated suction hose to remove explosive dust is preferred. A permanent attachment increases the risk of propagation through the collection system should a detonation occur at the dust-producing machine.

4.42.4.3. Manually operated hoses should not be connected to explosive dust-producing machines. In dry vacuum collection systems, two collection chambers should be installed in series, ahead of the pump or exhaust. Wet collectors must provide for immersion of explosives to break up air bubbles, to release airborne particles, and to remove airborne moisture before it leaves the collector. This will keep moistened particles of explosives from entering the small piping between the collector and the exhaust or pump.

4.42.4.4. Explosives dust will be removed from the collection chamber at least once each shift to eliminate unnecessary and hazardous concentrations of explosives. The entire system should be cleaned weekly, dismantling the parts if necessary.

4.42.4.5. The entire explosive dust-collection system will be electrically grounded and the grounds tested semiannually.

4.43. Water Flow for Explosives Manufacturing Areas and Loading Plants. An outside, underground, looped system of mains, preferably cast iron, should be installed. The water distribution system will meet the requirements of Military Handbook 1008 and the NFPA, Standards 1226 and 1231. Mains will be valved properly and will not extend under explosives locations.

4.44. Automatic Sprinkler Systems. Certain buildings in explosives manufacturing, surveillance, and inspection or ammunition workshop areas (for example, the receiving building in a load line) may require automatic sprinkler systems. The proper system should be determined by engineering studies of the hazards involved. Each system must be equipped with an audible warning device to alert personnel. Sprinkler systems in each building must be connected into the central alarm location. Sprinkler systems will be installed as prescribed in Military Handbook 1008.

4.44. (PACAF) These types of facilities may have “Apply No Water” munitions present. The benefits of automatic sprinkler systems preventing fire from reaching these munitions exceed the risks of the munitions becoming engulfed in flames.

4.45. Deluge Systems. Machinery or operations in which there is a process fire hazard will have an auto deluge system. Quick acting sensors such as ultraviolet detectors will be used. In addition, hand-operated, quick-acting deluge control equipment should be provided.

4.45.1. Deluge systems should be charged with steam, water, or chemicals. This depends on the expected character of the fire to be controlled, as determined by engineering studies of the hazards (NFPA, Standard 13, Sprinkler Systems, and Standard 16, Foam-Water Sprinkler and Spray Systems).

4.45.1.1. Control devices used should be actuated by rate or rise, fixed temperature, or their combination, as appropriate. If the system contains electrical components, the controls will be placed in enclosures approved by the National Electrical Code (NFPA 70).

4.45.1.2. If there are two or more deluge systems in the same fire area, supply mains and the arrangements and size of the system riser will provide each system with the required quantities of water per head.

4.45.1.3. A device will be installed on the supply side of the system so that it will actuate an audible warning device in affected operating areas when the pressure fails.

4.45.2. Operations protected by a deluge system should be stopped immediately if the system fails and should not be resumed until adequate protection is provided.

4.46. Maintenance and Repairs to Equipment and Buildings.

4.46.1. Conduct or obtain an appropriate safety analysis on all new equipment that interfaces with explosives before it is used in a hazardous environment. Examine and test newly repaired machinery to ensure its safe operating condition.

4.46.2. Before repairs are allowed on any equipment that has been exposed to contamination by explosive dust, etc., clean the equipment and tag it. The tag must be signed by the operating supervisor, certifying that all explosives have been removed. If it has been impossible to clean some part, note this on the tag, together with clear instructions to maintenance personnel on how to handle it safely.

4.46.3. Do not undertake major repairs or changes in a hazardous location during regular operations without removing the hazardous material. The consent of the supervisor in immediate charge of the building must also be obtained.

4.46.4. Before beginning repairs in an explosives location, the explosives location safety representative will inspect the area for the presence of explosives and dust, and provide for the removal of all hazardous materials. Remove all explosive residue material from equipment, crevices beneath floors, within walls and pipes, and under fittings where explosives may have collected. The area should be washed down thoroughly.

4.46.5. If machines and equipment have been oiled, repaired, or adjusted, remove all tools used for the repairs. All operators must inspect their equipment to be assured of its safe operating condition before resuming work.

4.46.6. When maintenance personnel enter buildings in which conductive shoes are required, wear conductive shoes or conductive overshoes with ankle straps. Because electricians are not allowed to work on live electrical equipment while wearing conductive shoes, remove all explosives before proceeding with the electrical work.

Section 4C—Assessing Risk by Knowing the Effects of Explosions

4.47. General. Explosives risk assessments are a subset of the commander's overall risk management program. An explosives risk assessment analyzes hazards associated with transporting, storing, disposing of, handling or firing ammunition and explosive materials. Operational Risk Assessments (AFPAM 90-902) may range from examining the relationship between a PES and an ES**,** to determine what effect one has on the other in the event of an accidental explosion, to ascertaining the worst credible event ram-

ifications of an explosives handling mishap. Although risk assessments are required when explosives standards cannot be met, they should also be *routinely used* in other instances, as a commanders management tool. For example, combat loaded aircraft parked on an open ramp, separated by K11, meets the standard. Commanders should also be advised that in this situation, the total destruction of an adjacent aircraft is certain and that a delayed propagation is likely, in the event of an explosion on one of the combat loaded aircraft at the K11 separation. The commander should also be apprised of the probability of such an event happening.

4.47.1. Assessing Risk for Non Q-D Situations (Deviations). Because the scenarios are endless, there are no specific rules for doing risk assessments for non Q-D situations. Relying on the wisdom, knowledge and experience of the Weapons Safety Manager and others associated with the problem, coupled with common sense, is the wisest approach for these kinds of risk assessments.

4.47.2. Assessing Risk for Q-D Situations. The mathematical formula provided in paragraph **3.11.** (also used for determining required Q-D separations) is used for assessing risk. In most cases, a given NEW and a known distance from the PES to the ES are used to derive the actual K-Factor. Dividing the distance by the cube root of the NEW will give the actual K factor of protection. K factors equate to a psi overpressure, see **Table 4.2.** below. Knowing the expected overpressure can help in understanding the facility or equipment damage and the personnel injuries expected to be sustained by a particular blast overpressure. Hazardous fragments, both primary and secondary, low angle and high angle, must also be considered when preparing risk assessments. Refer to paragraphs **4.48.** and **4.49.** for specific information about blast and fragments.

4.47.3. Professional Assistance for Explosives Risk Assessments. Units may experience situations when engineering analysis is required to provide a credible risk assessment. There are numerous governmental and non-governmental organizations available for professional assistance. Contact your MAJCOM safety office.

Table 4.2. K-Factor to PSI Relationship.

K-Factor	PSI	K-Factor	PSI	K-Factor	PSI	K-Factor	PSI
1.0	1000	7.0	20	20	3.0	33	1.5
1.2	763	8.0	15	21	2.8	34	1.4
1.4	597	9.0	12	22	2.6	35	1.4
1.6	475	10	9.6	23	2.4	36	1.3
1.8	384	11	8.0	24	2.3	37	1.3
2.0	315	12	6.8	25	2.2	38	1.25
2.5	200	13	5.9	26	2.1	39	1.2
3.0	135	14	5.2	27	2.0	40	1.2
3.5	95	15	4.7	28	1.9	45	1.0
4.0	70	16	4.2	29	1.8	50	0.9
4.5	53	17	3.8	30	1.7	60	0.7
5.0	42	18	3.5	31	1.63	70	0.6
6.0	28	19	3.2	32	1.56	80	0.5

4.48. Blast Pressure. The violent release of energy from a detonation in a gaseous medium results in a sudden pressure increase in that medium. The pressure disturbance, termed the blast wave or overpres-

sure, is characterized by an almost instantaneous rise from the ambient pressure to a peak incident pressure (Pso). This pressure increase, or shock front, travels radially from the burst point with a diminishing velocity that always is in excess of the sonic velocity of the medium. Gas molecules making up the front move at lower velocities. This latter particle velocity is associated with a "dynamic pressure," or the pressure formed by the winds produced by the shock front. As the shock front expands into increasingly larger volumes of the medium, the peak incident pressure at the shock front decreases and the duration of the pressure increases. If the shock wave impinges on a rigid surface, oriented perpendicular to or at an angle to the direction of propagation of the wave, an additional reflected pressure instantly is developed on that rigid surface and the pressure is raised to a value that exceeds the incident pressure. This additional reflected pressure is (from that moment on) a function of the cumulative pressure in the incident wave and the pressure induced by the angle formed between the rigid surface and the plane of the initial shock front.

Table 4.3. Blast Effects.

IM (K6, 27 psi) Barricaded	1. Unstrengthened buildings will be destroyed completely. 2. Personnel at this distance or closer will be killed by direct action of blast, by being struck by building debris, or by impact against hard surfaces. 3. Transport vehicles will be overturned and crushed by blast. 4. Aircraft will be destroyed by blast, thermal, and debris effects. 5. Control. Barricades are effective in preventing simultaneous detonation by low angle fragments, but provide only limited protection against delayed propagation of explosion caused by fire resulting from high angle firebrands.
IM (K11, 8 psi) Unbarricaded	1. Unstrengthened buildings will suffer damage approaching total destruction. 2. Personnel are likely to be injured seriously by direct action of blast, by being struck by building debris, or by impact against hard surfaces. 3. There is a 20-percent risk of eardrum rupture. 4. Aircraft will be damaged heavily by blast and fragments; destruction by ensuing fire is likely. 5. Transport vehicles will sustain severe body damage, minor engine damage, and total glass breakage. 6. Barricading will reduce significantly the risk simultaneous detonation and injury of personnel by fragments.
IL (K18, 3.5 psi)	1. Direct propagation of explosion is not expected. 2. There is some possibility that delayed communication of an explosion may occur from fires, or as a result of equipment failure at the ES. 3. Damage to unstrengthened buildings will be of a serious nature and approximately 50 percent or more of the facility will be lost. Sensitive electronic equipment is expected to stop functioning. 4. There is a 1-percent chance of eardrum damage to personnel. 5. Personnel injuries of a serious nature [including some fatalities] are likely from fragments, debris, firebrands, or other objects, including the structural failure of building walls and roofs. 6. Aircraft can be expected to suffer considerable structural damage from blast. Fragments and debris are likely to cause severe damage to aircraft at K18. 7. Transport vehicles will incur extensive, but not severe, body and glass damage consisting mainly of dishing of body panels and cracks in shatter resistant window glass. 8. Control. Many situations arise in which control of pressure by suitably designed suppressive construction at the PES or protective construction at the ES are practical. Use of such construction to withstand blast overpressure is encouraged if it is more economical than distance alone, or if sufficient distance is not available to prevent the overpressure from exceeding this level.

PTR (K24, 2.3 psi)	1. Unstrengthened buildings can be expected to sustain damage. Approximately 20 percent of the building must be replaced. 2. Occupants of exposed structures may suffer temporary hearing loss, or injuries from secondary blast effects such as building debris projectiles and the tertiary effect of building feature displacements (collapsed window and door hardware, and roof and/or wall partitions). 3. Personnel in the open may be injured directly by the blast, if thrown against rigid objects or buildings. There can be fatal personnel injuries caused by fragments, debris, and structural failures. The extent of personnel injuries depends on the construction and strength of the PES structure, the amount of ammunition detonated, and its fragmentation characteristics. 4. Vehicles on the road should suffer little damage unless hit by a fragment or unless the blast wave causes momentary loss of control. 5. Aircraft should suffer some damage to appendages and sheet metal skin from blast and possible fragment penetration; however, the aircraft should be operational with minor repair. 6. Control. The risk of injury or damage due to fragments for limited quantities of explosives at the PES can be reduced by barricading. Many situations arise in which control of pressure by suitably designed suppressive construction at the PES or protective construction at the ES are practical.
PTR (K30, 1.7 psi)	1. Unstrengthened buildings can be expected to sustain damage, approximately 10 to 15 percent of the building will require replacement. 2. Occupants of unstrengthened structures may suffer injury from the secondary effects of the buildings structural failure or from driven debris projectiles (window glass, window mullions, window and door hardware, and collapsed roof or wall partitions). 3. Aircraft in landing and takeoff status may lose control and crash. 4. Parked military and commercial aircraft likely will sustain minor damage due to blast but should remain airworthy. 5. Personnel in the open are not expected to be killed or seriously injured directly by blast. There may be some personnel injuries caused by fragments and debris, depending largely upon the PES structure and amount of ammunition and fragmentation characteristics thereof. 6. Control. The risk of injury or damage due to fragments for limited quantities of explosives at the PES may be reduced by barricading or application of minimum fragment distance requirements.
IB (K40, 1.2 psi)	1. Unstrengthened buildings can be expected to sustain damage up to about 5 percent of the building must be replaced. 2. Personnel in buildings are provided a degree of protection from death or fatal injury. 3. Personnel in the open are not expected to be injured seriously directly by the blast. Personnel injuries from projectile fragments and the failure of the exposed facility (including the possibility of fatalities) will depend upon the PES structure, the amount of ammunition, their fragmentation characteristics, and the strength of the ES structure. 4. Control. Glass breakage and structural damage can be reduced by means such as orientation between the PES and the ES, and by keeping the surface area of exposed glass panels to a minimum. The use of blast-resistant, reinforced glass windows is recommended.

4.48.1. Blast Effects when Facilities are Involved. When an explosion occurs within a structure, the peak pressure associated with the initial shock front will be extremely high, and in turn, may be amplified by its reflections with hardened surfaces in the structure. In addition, the accumulation of gases from the explosion will exert additional pressures and increase the load duration within the structure. The combined effects of these pressures may actually destroy the unreinforced structure because adequate venting for the expanding gas and the reflected shock pressures were not provided for in the original facility design analysis. For structures that have one or more strengthened walls, venting for relief of excessive gas or shock pressures, or both, may be provided by means of openings in or frangible construction of the facility walls or roof, or both. This type of construction will permit the blast wave from an internal explosion to spill over onto the exterior ground and building surfaces. These

pressures (referred to as exterior or leakage pressures), once released from their confinement, expand radially and act near instantaneously on nearby structures or persons on the other side of the barrier.

4.48.2. Blast Effects for Hazard Class/Division (HC/D) 1.1 Explosives.

4.48.2.1. Conventional Structures. Conventional Northern tier structures are designed to withstand roof snow loads of 30 pounds per square foot (1.44 kilopascals) and coastal structures (exposed to annual hurricanes) are designed to withstand wind loads of 100 miles per hour (161 kilometers per hour). These loads each equate to 0.2 pounds per square inch (psi). Airblast overpressure at HC/D 1.1 barricaded intraline distance is 12 psi (82.7 kPa)(1728psf); at unbarricaded intraline distance is 3.5 psi (24 kPa) and at inhabited building distance is 0.9 to 1.2 psi (6.2 to 8.3 kPa). Although comparing these overpressure loads with the design capacity is not exactly the same, it is evident that conventional buildings will sustain extensive damage, even at inhabited building distance. The approximated damage to be expected at the various pressure levels described below are conservative estimates.

4.48.2.2. Earth-Covered Magazines. Earth-covered magazines provide virtually complete protection against propagation of explosions by blast, fragments, and fire; however, there may be structural failures in the magazines' concrete barrels and walls, possible severe damage of front walls, and damage to doors and ventilators. Munitions assets are expected to remain serviceable following an explosion in an adjacent earth covered magazine.

4.48.2.3. Barricaded Open-Storage Modules. Barricaded open-storage modules provide a high degree of protection against propagation of explosion by blast and fragments. However, if flammable materials are present in nearby cells, subsequent propagation of explosion by fire is possible. In the event of an unplanned detonation in an adjacent cell, munitions at K1.1 will be covered with earth and unavailable for use until extensive uncovering operations and possibly maintenance are completed. Items at K2.5 separations are expected to be readily accessible.

4.48.2.4. Blast Effects for Specified K-Factors and PSI Overpressures. **Table 4.3.** outlines expected blast effects for various levels of pressure.

4.49. Fragments. An important consideration in the analysis of the hazard associated with an accidental explosion is the effect of fragments generated by the explosion. These fragments are classified as primary or secondary depending on their origin.

4.49.1. Primary fragments are formed as a result of the shattering of the explosives container. The container may be the casing of conventional munitions, the kettles, hoppers, and other metal containers used in the manufacture of explosives; the metal housing of rocket engines; and similar items. These fragments usually are small in size and travel initially at velocities of the order of thousands of feet per second.

4.49.2. Secondary fragments are formed as a result of high blast pressures on structural components and items in close proximity to the explosion. These fragments are somewhat larger in size than primary fragments and travel initially at velocities in the order of hundreds of feet per second.

4.49.3. A hazardous (life threatening) fragment is one having an impact energy of 58 ft-lb (79 joules) or greater.

Chapter 5

EXCEPTIONS

5.1. General Information. This chapter implements AFI 90-901 by providing a mechanism for units to assess the level of risk involved with Q-D exceptions and by providing guidance on the appropriate approval level for each exception. Depart from the requirements of this manual only when there are strategic or compelling reasons to do so. Make this determination after a complete analysis of the mission, explosives requirements, and facilities. Ease of operation is not a reason for requesting an exception. This chapter explains how to request and manage authorized departures from the requirements of this manual.

5.2. Definitions and Basic Guidance.

5.2.1. Exception is the inclusive term for any departure from the requirements of this manual. Exceptions are further divided into waivers, exemptions, and deviations. Document deviations as prescribed in paragraph **5.2.5.** Document waivers and exemptions according to paragraph **5.5.**

5.2.2. Waivers apply to relatively short-term violations of the Q-D requirements of this regulation. Five years or less is considered short-term. Include the proposed corrective action and anticipated get-well date on all waiver requests. Waivers resubmitted as exemptions will be approved by the next higher level of command.

5.2.3. Event Waiver has the same definition as a waiver, except the condition or circumstances causing the waiver arises unexpectedly and there is not enough time to comply with formal waiver submission procedures. It must not be used as a replacement for proper planning. Event waivers are only applicable for day-to-day operations.

5.2.3.1. The responsible commander may approve a waiver for the length of the emergency but not to exceed 72 hours. Fax a copy of the approved request to MAJCOM and AFSC/SE. If the waiver cannot be corrected within 72 hours submit a formal waiver. This one time emergency waiver cannot be repeated. Recurring situations require an exception (waiver, exemption, or deviation) reviewed/approved by the appropriate level (such as MAJCOM or SAF.) If the AF unit is a tenant on a non-USAF installation, process according to governing directives and insure appropriate MAJCOM and HQ AFSC/CC are sent information copies.

5.2.3.1. (PACAF) Document violated PES/ESs on AF Form 943. Electronic mail (e-mail) may be used in lieu of fax.

5.2.3.2. An event waiver does not apply to violations where there is a reoccurring requirement.

5.2.3.3. Event waivers will contain, as a minimum, the following information:

5.2.3.3.1. Type and NEW of munitions involved.

5.2.3.3.2. Type of ES. If people are present, give estimate of the number of civilian and military.

5.2.3.3.3. Distance required versus distance available and Q-D standard not met.

5.2.3.3.4. A narrative explanation outlining the reason(s) why the explosive standards could not be met and a discussion of reasonable alternatives considered and rejected.

5.2.3.3.5. A Waiver/Exemption Decision Nomograph for each exception pair (paragraph **5.5.2.**).

5.2.3.3.6. Expected duration of waiver.

5.2.3.3.7. Point of Contact (POC), name, grade, phone/email.

5.2.4. An exemption is a relatively long-term (greater than 5 years) or permanent departure from the Q-D standards. Include the proposed action and anticipated get-well date on all exemption requests. Exemptions are not applicable to MOOTW/contingency/combat operations less than 12 months in length.

5.2.5. Deviations apply to non-Q-D departures from the requirements of this manual. Basically, **Chapter 2** of this manual contains non-Q-D explosives safety standards. Use a memorandum for requesting deviations. MAJCOMs determine approval levels for deviations for day-to-day and war plan operations; these deviations will be reviewed every three years. Combatant Commands determine approval level for deviations for MOOTW/contingency/ combat operations less than 12 months in length.

5.2.5. (PACAF) A timeline will be submitted for all deviations outlining the measures being taken to correct the deficiency. Deviations for day-to-day and war plan operations are approved by PACAF/SE.

5.2.6. Exceptions need not be submitted when compensatory measures can be taken (i.e., temporarily reducing the authorized NEW of a PES) that will avoid an exception. Document as prescribed in paragraph **4.10.** and **4.11.**

5.2.7. The MAJCOM weapons safety office and the host base weapons safety office maintain copies of current waivers, exemptions, and deviations for day-to-day and war plan operations.

5.2.8. Waivers, deviations, and exemptions for non-DoD explosives activities on DoD installations. Waivers, deviations, and exemptions to AF explosives safety requirements of this manual will not be granted to non-DoD user explosives site plans for explosives facilities. Rather the site plan will: (1) Clearly specify situations where non-compliance with explosives safety requirements exist; (2) Include a risk acknowledgement letter by the non-DoD user; (3) Include the necessary operating restrictions to ensure that Government owned flight hardware, facilities, or other resources will not be hazarded by the non-compliance(s) to a level unacceptable to the owner of the assets; and (4) Include a recommendation for approval/disapproval of the site plan from the local AF explosives safety office with supporting rationale, and obtain the coordination of the non-DoD user on the explosives site plan prior to submittal to higher headquarters.

5.3. Approval Levels.

5.3. (PACAF) Use **Figure 5.1.**, Exception Decision Nomograph -Day-to-Day Operations, to determine approval levels for exceptions at Alaska FOLs.

5.3.1. Exemptions and Waivers. All planned construction in support of day-to-day and war plan operations, and MOOTW/contingency/combat operations exceeding 12 months, not meeting Q-D standards, must be approved by the Secretary of the Air Force (SAF). Additionally, an action which places an existing facility that was constructed within the past three years at less than prescribed distances from a PES requires SAF approval. The Air Force Chief of Safety may deviate from this requirement on a case-by-case basis. Approval level of all other exceptions for day-to-day and war plan operations,

and MOOTW/contingency/combat operations exceeding 12 months, will be based on the level of risk assumed by the specific hazard. Risk-based approval levels range from SAF/MI down to Numbered Air Force commander level. As specified in **Figure 5.1.** and **Figure 5.2.**, NAF commanders may delegate approval authority for the lowest levels of risk to wing commanders or equivalent. Approval level of waivers for MOOTW/contingency/combat operations less than 12 months in length will be determined by the Combatant Command. Also see **Table 5.4.** for approval levels.

5.3.1. (PACAF) The 15 ABW/CC will be the NAF risk-based approval authority for exceptions involving 15 ABW host and tenant unit operations.

5.3.2. Override Authority. The Air Force Chief of Safety may elevate any Q-D exception for day-to-day and war plan operations, and MOOTW/contingency/combat operations exceeding 12 months, to the Air Force Chief of Staff for final approval or for information purposes.

5.3.3. Out of Continental United States (OCONUS) Locations. Host nation military and civilian personnel must be provided the same level of protection as U.S. personnel. Host nation commanders must be notified of Q-D exceptions of U.S. Air Force standards to host nation personnel. Also, where international treaties or status of forces agreements require it, host nation approval must be obtained. See paragraph **3.8.9.** for additional guidance, when explosives content of host nations facilities may be hazarding US Air Force facilities and personnel.

5.3.4. (Added-PACAF) In Korea, prior coordination with the host nation has been waived as per Deputy Assistant SECAF letter dated 29 Feb 88. Once signed by installation and NAF commanders, 7 AF/SE will provide US Forces Korea (USFK) with the necessary documentation for coordination with appropriate host nation authorities when non-ROK military exposures are violated. 7 AF/SE will provide the ROKAF Air Force Operational Command (AFOC) with necessary documentation when only ROK military exposures are violated.

5.4. Reviews. Periodic reviews of exceptions have a four-fold purpose: to confirm the continued existence of the exception; to check the accuracy of the data associated with the exception; to insure the requirement for the conditions causing the exception still exist because of strategic or compelling reasons, and to ensure compensatory actions/stipulations are still in force. Reviews should consider all possible alternatives for eliminating or lessening exceptions.

5.4.1. Periodic Reviews. Existing waivers will be reviewed annually on the anniversary of the approval date. Exemptions will be reviewed every 5 years on the anniversary of the approval date. Reviews may be accomplished early to spread out workloads.

5.4.1. (PACAF) Periodic reviews will be submitted to the NAF prior to submission to PACAF/SEW with the following documentation, as applicable: a cover letter explaining what actions were accomplished, an Exception Decision Nomograph; and a copy of the original AF Form 943 with changes. Maps and any additional information that will explain the review are required.

5.4.2. Approval Levels for Reviews. Exceptions will be reviewed at the original approval level unless units elect to apply risk-based criteria to existing exceptions approved under the previous methodology. If the PES or ES data identified in an exception package changes, apply risk-based criteria to determine the appropriate level for review. Also see **Table 5.4.** for approval levels.

5.5. Preparing Waivers and Exemptions. Include PES/ES relationships not meeting Q-D in ESPs. Assign a waiver or exemption number to each PES/ES exception pair. See **Attachment 4** for identifying

exceptions on the AF Form 943. For each exception pair, submit an explanation in narrative form (paragraph **5.5.1.**) and a Waiver/Exemption Decision Nomograph (paragraph **5.5.2.**).

5.5.1. Narrative. Each request to depart from Q-D criteria must include a narrative explanation outlining the reason why the explosives standards could not be met. Each exception narrative will be on a separate page with the appropriate decision nomograph (**Figure 5.1.** or **Figure 5.2.**). In order to comply with the DoD requirement of "strategic or compelling" reasons for requesting an exception, include a discussion of reasonable alternatives considered and rejected. Examine every feasible corrective action and cost estimate, prior to submitting site plans with exceptions. This review will be a team effort involving installation safety, civil engineering, and other agencies affected by the exceptions. Installation safety staff will keep documentation, describing the alternatives considered. If exceptions are not correctable, list the reasons in the site plan, and state that cost estimates are therefore not applicable. **Attachment 6** contains a sample narrative.

5.5.2. Exception Decision Nomograph. The nomograph is a two-step process. Step #1 involves conducting a risk assessment to categorize the level of risk. Step #2 plots the criteria on the nomograph and determines the approval level. Use the applicable nomograph based on the following situations:

5.5.2.1. For exceptions in day-to-day operations and MOOTW/contingency/combat operations exceeding 12 months, use **Figure 5.1.**

5.5.2.2. For exceptions in war plan operations, use **Figure 5.2.** For combined day-to-day and war plan operation ESPs, use **Figure 5.1.** for exceptions. However, if tiered siting is used, **Figure 5.2.** may be used for exceptions associated solely with the war plan operations tier.

5.5.2.3. For exceptions in MOOTW/contingency/combat operations less than 12 months in length, immediately identify risks and obtain approval in accordance with Combatant Command procedures.

5.5.2.3. (PACAF) Contingency: Notification to deploy/employ in preparation of war or hostilities. The resulting action would put personnel in harm's way. Use **Figure 5.1.**, Exception Decision Nomograph -Day-to-Day Operations, to determine approval levels for exemptions at Alaska FOLs.

5.5.2.4. Risk Assessment. Risk levels are calculated based on three criteria: the likelihood of a mishap, the exposure of personnel and resources to an explosives hazard, and the possible consequences of a mishap.

5.5.2.4.1. Likelihood. The likelihood of a mishap is the relative probability an explosives mishap will occur based on the type of explosives involved, the level of activity at the PES, and external threats to the location. Each PES exception will be categorized according to one of the five levels identified in **Table 5.1.** Contact HQ AFSC/SEW where **Table 5.1.** fails to describe explosive operations or locations adequately.

Table 5.1. Likelihood of Mishap.

Category Likelihood	Storage	Maintenance Inspection, Assembly, Disassembly	Operations	Transportation	Destruction	Testing
Possible. Over a typical career, a mishap can be expected to occur on an intermittent basis within the USAF		Dangerously unserviceable items awaiting destruction				Initial tests of new systems
Seldom. Over a typical career, a mishap can be expected to occur randomly within the USAF.	Any operating stocks in an area subject to hostile action such as rockets, missiles, air attacks, or terrorists.	Any operating location in an area subject to hostile actions such as rockets, missiles, air attacks, or terrorists.	Any explosives operations in an area subject to hostile actions such a rockets, missile, air attacks, or terrorists.			
	Dangerously unserviceable items awaiting destruction.	Hazardous environments with gases, fibers, etc.				
Unlikely. Over a typical career, a mishap can be expected to occur infrequently within the USAF.		Unserviceable (but not dangerous) items.	TDY operations during exercises/ contingencies/alert.		Burning, detonation, and static firing areas.	
		Circuit checks.	Hot Cargo Missions of unserviceable or unpackaged material.			
		TDY during contingencies/ exercises				
Improbable. Over a typical career, a mishap will rarely occur within the USAF.	Operating stocks in storage requiring handling more than once each month.	Home station during contingencies/ exercises.	Home station activities during exercises / contingencies/alert.	Railheads requiring application of Q-D.		Testing operational systems.
	Unserviceable (but not dangerous) items in storage.	Pyrotechnics	TDY operations during peacetime.			
		Functional tests not placing voltage across firing circuits.	Flightline holding areas/ready service storage locate outside munitions storage areas			
		Outdoor operations during inclement weather.	Deployed ground-based missile meant to be employed in a non- mobile mission for offensive or defensive purposes.			
Practically Impossible. So rare, a mishap is not expected to occur during a typical career.	Serviceable items in extended storage requiring handling less than once each month.	Paint and packing.	Home station flightline explosive activities during peacetime.			
		Operations involving no exposed explosives.	ICBM Launch Facilities.			
			Hot Cargo Missions of serviceable packaged material.			

5.5.2.4.2. Exposure. Exposure is the amount of time an ES is exposed to a PES and is expressed as man-hours per year. Use **Table 5.2.** to categorize each ES in violation.

5.5.2.4.3. Consequences. The possible consequences of an explosives mishap are based on the worse-case type and amount of explosives present, the construction of both the PES and ES, and the distance between the PES and ES. Use information in paragraph **4.47.** through **4.49.** to estimate the potential damage and injuries from a mishap explosion. Consequences will be categorized based on their effect on personnel, mission capability, and other resources according to **Table 5.3.**

5.5.2.5. Plotting the Nomograph. Each exception pair will have three data points as defined in paragraph **5.5.2.1.** Plot each data point on the applicable nomograph. Draw a straight line from the Likelihood point, through the Exposure point, to the Pivot Line. From this point on the Pivot Line, draw a straight line through the Possible Consequences point, to the Approval Level line. **Figure 5.3.** is an example of a nomograph plot.

5.5.3. Secretary of the Air Force-Level Waivers and Exemptions. The following requirements pertain to all exceptions requiring SAF/MI or SECAF approval. To expedite processing of these packages through Air Staff and SAF offices, a standardized format is essential. Units/MAJCOMs seeking SAF-level approval for exceptions will assemble request packages using the following format:

5.5.3.1. Tab 1. MAJCOM/CC or CV memorandum. Use **Attachment 6** as a format for this memorandum.

5.5.3.2. Tab 2. Maps. Provide the normal map for the explosives site plan according to paragraph **4.11.4.** Additionally, submit a map which clearly shows the specific exceptions the SAF/MI or the SECAF will be approving. This map should be 8 1/2" x 11" to allow for reproduction and staffing. If larger maps are required for clarity's sake, submit seven copies to allow for staffing. Use separate colors to delineate between SAF-approved exceptions and those approved at subordinate levels of command. Where existing explosive clear zones are changing, show both the old and new.

Table 5.2. Exposure

Category	Limits	Example
Rare	< 48 man-hours per year	3 people @ 2 workdays per year OR 1 person @ 6 workdays per year
Unusual	< 288 man-hours per year	3 people @ 1 workday per month OR 36 people @ 1 workday per year
Occasional	< 1248 man-hours per year	3 people @ 1 workday per week OR 1 person @ 3 workdays per week
Frequent	< 10,440 man-hours per year	10 people @ 4 hours per day OR 260 people @ 5 days per year
Continuous	> 20,800 man-hours per year	10 people @ 8 hours per day OR 260 people @ 10 days per year

Table 5.3. Consequence of a Mishap.

Category	Criteria
Catastrophic	- > 5 related personnel fatalities or any unrelated fatality - Mission curtailed - $10,000,000 damage
Critical	- < 5 related personnel fatalities - Serious injury to unrelated personnel - Mission interrupted - $500,000 damage
Marginal	- Some serious injury to related personnel - Mission degraded - $50,000 damage
Negligible	- Minor injury - Mission unaffected - $1,000 damage

Figure 5.1. Exception Decision Nomograph - Day-to-Day Operations.

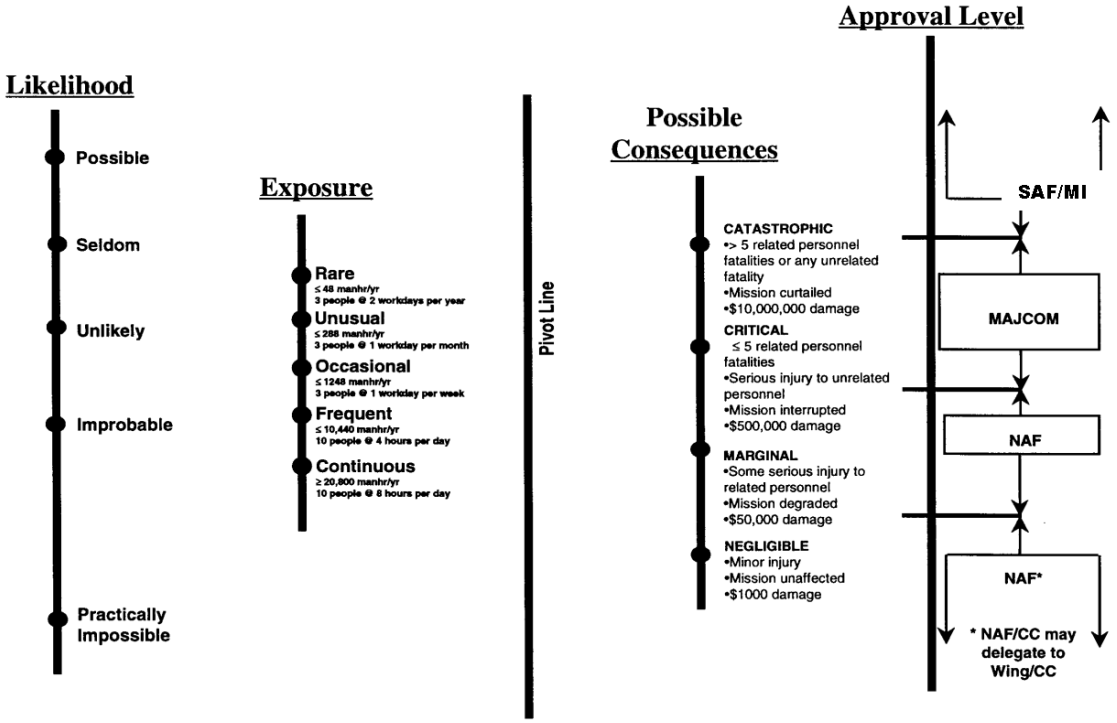

Title:_____ **Exception Type:**_____

Figure 5.2. Exception Decision Nomograph - War Plan Operations.

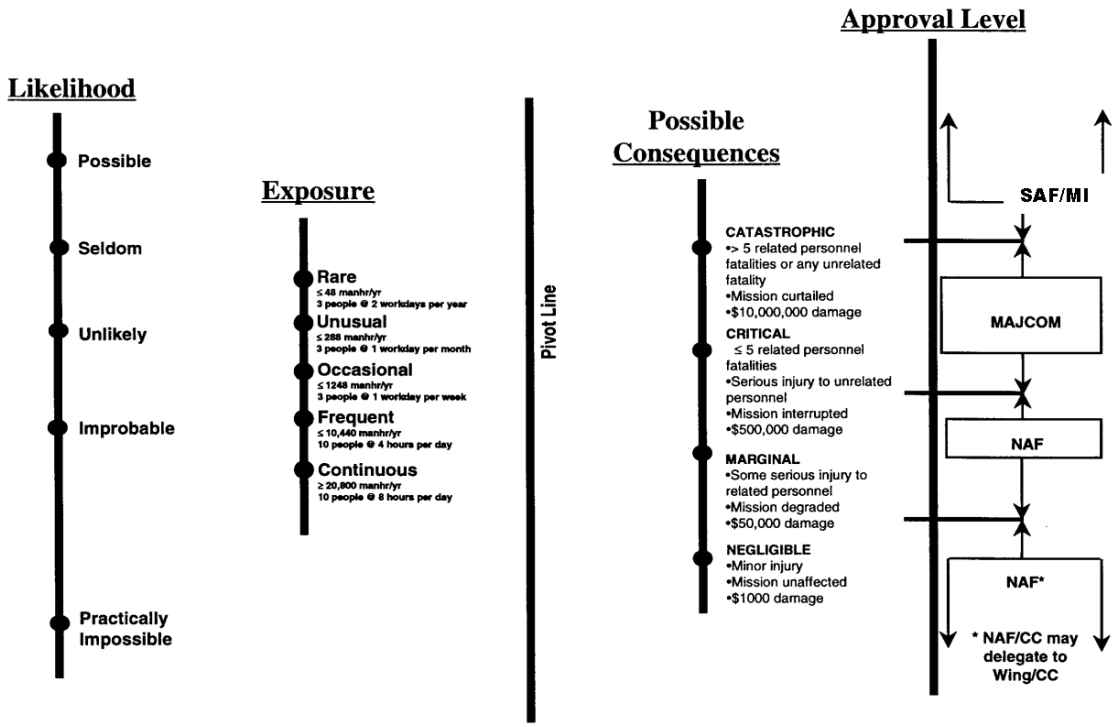

Title:_____ **Exception Type:**_____

Figure 5.3. Nomograph Plotting Example.

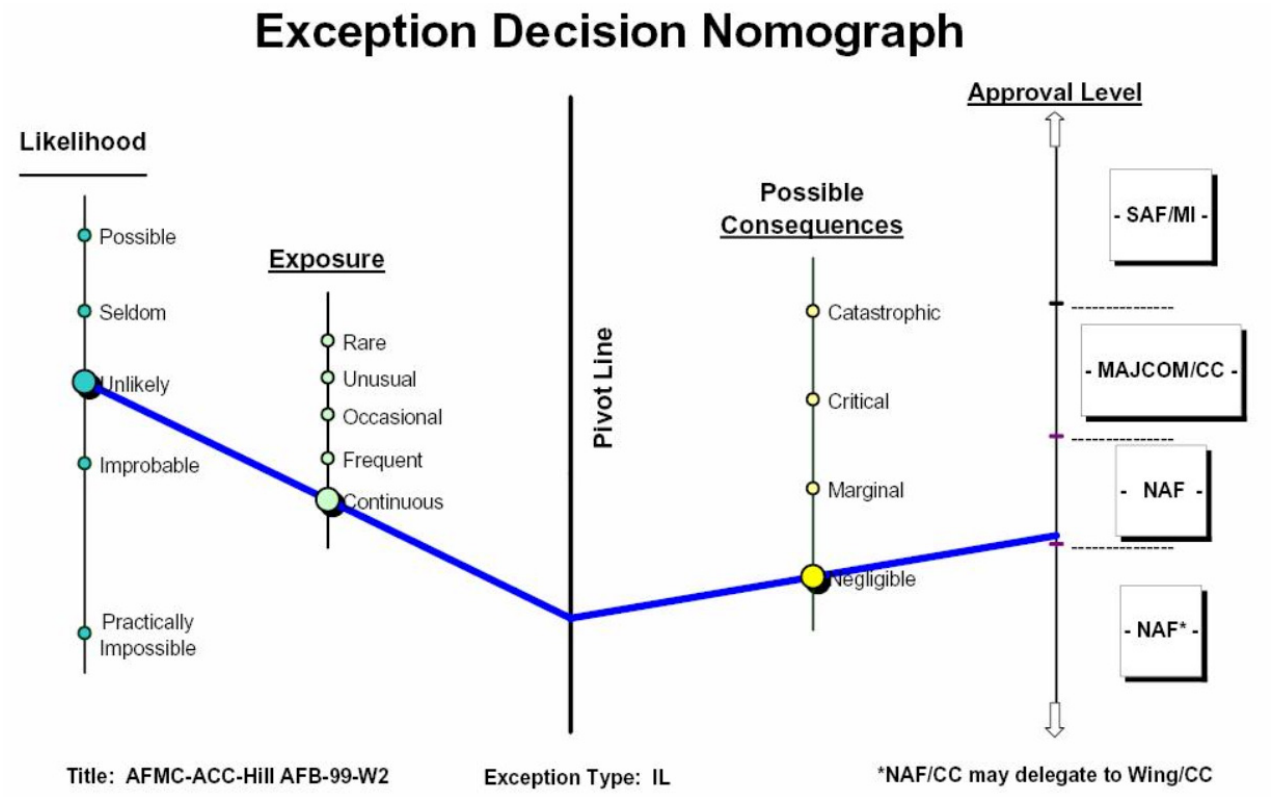

Step #1 – Plot the three criteria appropriately on the nomograph.
Step #2 – Draw a line from the LIKELIHOOD plot, through the EXPOSURE plot to the PIVOT LINE.
Step #3 – From the point on the PIVOT LINE, draw a second line through the CONSEQUENCE plot to the APPROVAL LEVEL line.

5.5.3.3. Tab 3. AF Form 943. Clearly show which siting pairs are without exception, which are exceptions and require SAF/MI or SECAF approval, and which have received approval at subordinate levels of command. Refer to **Attachment 4**, Figure A4.1 for specific guidance on the AF Form 943.

5.5.3.4. Tab 4. The Specific Standard Not Met. Provide sufficient information to explain the nature of the exception. Use highlighted, photocopied pages from the specific explosives safety standard to explain the type of separation required (e.g., IB, PTR) and the required distance or how the distance is calculated (e.g., Q-D distance criteria table, fragment distance criteria, etc.).

5.5.3.5. Tab 5. Justification. In narrative form, provide a detailed explanation of the "strategic or compelling" reason that drives the need for the SAF/MI or SECAF approval. Use specific references to aircraft sortie rates or other pertinent data to justify the type, quantity, and placement of explosives at the potential explosion site (PES). Additionally, fully justify the position of the excepted exposed site (ES). Provide any additional information, such as higher headquarters inspection findings or limiting factors (LIMFACs) which substantiate the request.

5.5.3.6. Tab 6. Risk Assessment. Provide a separate exception nomograph (Paragraph **5.5.2.** and **Figure 5.1.**) for each exception pair requiring SAF level approval.

5.5.3.7. Tab 7. Corrective Actions. Discuss any and all actions taken to mitigate the effects of an explosives mishap. Consider such things as building techniques, barricading, glass protection, tiered siting, or planned construction. If new construction or the movement of operations is planned, discuss the timelines and funding sources involved. Be specific.

5.5.3.8. Tab 8. Options. Discuss fully, all reasonable options considered by the unit but rejected in favor of the proposed action. Give details as to why each of the other options was not chosen, discussing limitations to funding, real estate, or other constraints, as appropriate.

5.6. Processing Waivers and Exemptions . Forward ESPs for day-to-day and war plan operations, and MOOTW/ contingency/combat operations exceeding 12 months, with exceptions through command channels to the Air Force Safety Center. Each level of review scrutinizes the package for validity. Return packages failing to meet the test of strategic or compelling need, or omitting a discussion of reasonable alternatives considered and rejected. See paragraph **5.5.1.** above. Day-to-day operations involving exceptions must not be allowed until the exceptions are approved. Approved explosives waiver and exemption documents are FOR OFFICIAL USE ONLY information subject to the marking and handling controls of AFI 37-131. The disclosure authority for agencies outside the DoD is HQ USAF/SE. Send requests for release under the Freedom of Information Act to HQ AFSC/JA, 9700 G Avenue SE, Kirtland AFB NM 87117-5670.

Table 5.4. Q-D Exception Approval Levels

IF	AND	THEN
No current exemption	Change causes exemption to facilities constructed within the past 3 years	SAF-approval required
No current exemption	Change causes exemption to facilities not constructed within the past 3 years	Apply nomograph
SAF-approved exemption for new construction	Change causes increased risk within 3 years of construction	SAF-approval required
SAF-approved exemption for new construction	Periodic review within 3 years of construction	SAF-approval required
SAF-approved exemption for new construction	Change causes increased/ decreased risk more than 3 years after construction	Apply nomograph
SAF-approved exemption for new construction	Periodic review more than 3 years after construction	Apply nomograph
SAF-approved exemption not involving new construction, approved prior to use of nomograph	Change causes increased/ decreased risk	Apply nomograph
SAF-approved exemption not involving new construction, approved prior to use of nomograph	Periodic review	Apply nomograph
SAF-approved exemption not involving new construction, SAF-approval driven by application of the nomograph	Change causes increased/ decreased risk	Apply nomograph
SAF-approved exemption not involving new construction, SAF-approval driven by application of the nomograph	Periodic review	Apply nomograph

Chapter 6

REAL PROPERTY CONTAMINATED WITH AMMUNITION AND EXPLOSIVES

6.1. General. Every means possible shall be used to protect the general public and the environment from exposure to ammunition and explosive hazards. This includes all explosive hazard areas, suspected or known to exist, on real property currently or formerly under USAF ownership or control.

6.1.1. This chapter contains policies and procedures necessary to provide protection to personnel and the environment as a result of ammunition, explosives or chemical agent contamination of real property currently and formerly owned, leased, or used by the Air Force. This chapter requires identification and control measures that are in addition to, not substitutes for, those generally applicable to USAF real property management.

6.1.2. USAF real property may be contaminated with ammunition and explosives as the result of past operations such as manufacturing, weapons firing, waste collection or disposal including pads, pits, basins, ponds, streams, burial sites, and other such operations.

6.1.3. AFI 32-9004, *Disposal of Real Property*, which is managed by HQ AFREA/MI, addresses contaminated real property (ATTACHMENT TO A2.16.2, Section A2.16, Hazardous Ordnance Contaminated Land). Activities associated with the disposal of contaminated real property should be coordinated with the installation civil engineer's real estate division representative. Whenever disposal is contemplated, an Environmental Baseline Survey must be conducted to identify any hazardous conditions associated with the subject property, including unexploded ordnance and other hazardous materials.

6.2. Disposal. Contamination of real property by disposal of ammunition, explosives, or chemical agents is prohibited. This prohibition includes disposal by land burial, discharge into watersheds, sewers, streams, lakes, or waterways. This policy does not include burial to control fragments during authorized destruction operations by detonation when in compliance with applicable statutes and regulations.

6.2.1. USAF real property that is known to be contaminated with ammunition and explosives that may endanger the general public cannot be released from custody until the most stringent efforts have been made to ensure appropriate protection of the public (see paragraph **6.1.3.**). Some contamination areas are so extensive that removal of the hazard is beyond the scope of existing technology and resources. Such properties shall be retained until they can be made harmless.

6.3. Identification and Control at Active Installations.

6.3.1. Permanent records will be created and maintained by the base civil engineer to clearly identify all areas contaminated with ammunition and explosives, and will be maintained by each installation. These records will indicate, to the extent possible, positive identification of the ammunition and explosives contamination by nomenclature, hazard, quantity, and exact location. All decontamination efforts will be similarly detailed.

6.3.2. If the installation is inactivated, the records will be transferred to an office designated by HQ USAF/CE to ensure permanent retention.

6.3.3. All contaminated locations will be placarded appropriately with permanent signs that prohibit entrance of unauthorized personnel. These signs will be multilingual, when appropriate, and maintained in a legible condition.

6.3.4. Active firing ranges, demolition grounds, and explosives test areas will be assumed to contain unexploded ordnance or explosive materials and will be controlled accordingly.

6.4. Active Installation Land Disposal.

6.4.1. Plans for leasing, transferring, or disposing of USAF real property (see AFI 32-9004) when ammunition and explosives are present, or are suspected to be present, will be submitted through command safety channels to HQ AFSC/SE, for submission to the DDESB for review and approval.

6.4.2. Land disposal submissions will state the intended end use of the property; the nature, extent and location of on- and off-base unexploded ordnance; improvements, proposed detection plan and degree of decontamination and the extent to which the property may be used safely without further decontamination.

6.4.3. When accountability and control of USAF real property containing ammunition and explosives is transferred to another Service, or a non-DoD activity, the action will be accompanied by a transfer of the permanent records of contamination.

6.4.4. Ammunition, explosives, or chemical agents must be removed until an acceptable level of protection, based upon the anticipated use of the property, is reached.

6.4.4.1. Transfer records will detail past ammunition and explosives introduction, describe decontamination efforts, provide residual contamination information, and advise the user not to excavate or drill in residual areas without a metal detection survey.

6.4.4.2. This information will be enclosed with the report of excess and entered in the permanent land records of the civil jurisdiction where the property is located.

6.4.5. Limited-use land transfers can be arranged with other federal agencies for compatible use of real property containing unidentified explosive ordnance (UXO), such as wildlife refuges, safety zones for federal power facilities, or other purposes not requiring entry except for authorized federal personnel. These land grants will include all restrictions and prohibitions concerning use of the property to ensure appropriate protection of federal personnel and the general public.

6.5. Remediation of Formerly Used Defense Sites (FUDS).

6.5.1. The MAJCOM will develop procedures to safely remediate those FUDS containing ammunition, explosives or chemical agents. The remediation plans will be provided to HQ AFSC/SE for review and approval. Priority will be given to the remediation of sites that pose an immediate public risk.

6.5.2. HQ AFSC/SE will submit a copy of the remediation plans to the DDESB for review and approval.

6.5.3. Remediation plans must identify the type of UXO suspected; the techniques to be used to verify the contamination; a risk assessment; and a description of the measures that will be taken to protect workers, the public, and the environment during the contamination assessment, cleanup and disposal phases of the operation. The degree and extent of contamination, an assessment of the potential for

contamination migration, and implementation of steps to halt such migration will be included in the remediation plans.

6.5.4. Significant hazards that arise during any phase of the remediation process will be brought to the immediate attention of the MAJCOM safety and civil engineering staff and HQ AFSC/SE. Changes to approved plans or procedures will be coordinated with those agencies involved in the original approval process and forwarded to HQ AFSC/SE prior to implementation.

6.6. Termination of Use of Facilities Storing Ammunition and Explosives.

6.6.1. Each storage facility no longer used to store ammunition and explosives must undergo a process to ensure ammunition and explosives and any visible explosive residues are removed within 180 days from the last use of the storage facility. These procedures help ensure that no threats to human health or the environment remain when the unit is no longer to be used to store ammunition and explosives. (Note: Ammunition storage units (ASU) that have been used to store waste military munitions must also comply with the closure procedures in paragraph 7.7.) These procedures will include:

6.6.1.1. Emptying the storage facility of all ammunition and explosives and related materials.

6.6.1.2. Cleaning the storage facility, as required, to remove any visible explosive residue.

6.6.1.3. Visually inspecting the storage facility for the presence of remaining ammunition or explosives or visible explosive residue by a knowledgeable individual that the installation or responsible activity commander appoints.

6.6.1.4. Removing from the storage facility all fire and chemical hazard symbols and marking the storage facility as empty.

6.6.1.5. Securing the storage facility to prevent inadvertent use or access.

6.6.1.6. Notifying the appropriate emergency response and regulatory authorities of the change in the storage facility's use.

6.6.1.7. Recording the date the storage facility was inspected, the name and position of the inspector, and the results in permanent real estate records.

6.7. Mineral Exploration and Extraction.

6.7.1. Ammunition and explosives facilities.

6.7.1.1. Mineral exploration and drilling activities are to be separated from ammunition and explosives operating and storage facilities by:

6.7.1.1.1. Public traffic route explosives safety distances if the site is not occupied by personnel during exploration or after drilling is completed.

6.7.1.1.2. Inhabited building explosives safety distance if occupancy is to continue after completion of operations. If chemical agents or munitions are known or suspected to be present, public exclusion distance (K328) must be maintained to the exploration or drilling activities. Examples of drilling activities are those for exploration or extraction of oil, gas, and geothermal energy.

6.7.2. Exploration, mining, and drilling of any kind are prohibited on the surface of lands containing explosives. Exploration and extraction is permitted by directional (slant) drilling at a depth greater

than 50 feet beneath the explosives contaminated land surface or by shaft mining at a depth greater than 100 feet beneath such land surface.

6.7.3. Installations will submit plans for mineral exploration and extraction on land in proximity to land that is contaminated or suspected to be contaminated with ammunition, explosives or toxic chemical agents. Plans will be forwarded through command channels to HQ AFSC/SE for submission to the DDESB for safety review and approval.

6.8. Real Property Contaminated With Ammunition and Explosives.

6.8.1. Prevent personnel from entering known or suspected UXO areas. Don't bury munitions, explosive residue, or chemical agents. Base civil engineering must placard sites formerly used for this purpose with warning signs and fence where possible. Ensure locations of known or suspected contamination are identified on the base comprehensive plan and included in base real property records (see AFI 32-9004).

6.8.2. Fencing and Placarding. Fences and signs must meet the requirements of AFI 31-209, *Air Force Resource Protection Program* or AFI 31-101, *Air Force Physical Security Program*.

6.8.3. When UXO exists, use the following guidelines:

6.8.3.1. Safety must work with base civil engineering (CE), historian, and MAJCOM safety staff to determine past property use throughout the history of the installation. Review old files, land use records, maps, and site plans.

6.8.3.2. If UXO is suspected, base civil engineering will request an explosive ordnance disposal (EOD) survey team through the MAJCOM.

6.8.3.3. Should CE or the EOD survey team determine no UXO exists, the MAJCOM Chief of Safety will document that fact by letter to HQ AFSC/SE with an analysis of the research leading to that conclusion.

6.8.3.4. Submit clearance remediation plans through MAJCOM/SE and HQ AFSC/SE for DDESB approval following the EOD survey and prior to beginning operations. Clearance plans must include:

6.8.3.4.1. Summary of research sources and survey team investigation.

6.8.3.4.2. Descriptions of areas to be cleared.

6.8.3.4.3. Appropriate maps.

6.8.3.4.4. Future intended use of the land and any planned restrictions on use.

6.8.3.4.5. Clearance procedures to be used and an assessment depth chart.

6.8.3.4.6. Possible environmental issues.

6.8.3.4.7. Support required by the unit.

6.8.3.5. Once clearance is complete, ensure two copies of the Certificate of Clearance and Report of Clearance are sent to HQ AFSC through MAJCOM/SE.

6.8.4. For additional policy, references and guidance, consult:

6.8.4.1. MAJCOM or HQ US Air Force civil engineer (see AFI 32-9004) staffs in real property, environmental and explosives ordnance disposal.

6.8.4.2. HQ Air Force Base Disposal Agency.

6.8.4.3. Air Force Center for Environmental Excellence.

6.8.4.4. HQ Air Force Safety Center (SE).

6.8.4.5. DoD 6055.9-STD.

6.8.4.6. MAJCOM and HQ AFMOA bioenvironmental engineering staffs (BES).

Chapter 7

SPECIAL STORAGE PROCEDURES FOR WASTE MILITARY MUNITIONS

7.1. General.

7.1.1. A military munition is a "waste" if it is a solid or hazardous waste under regulations implementing the Resource Conservation and Recovery Act (RCRA), (42 U.S.C. Section 9601 et seq. In general:

7.1.1.1. An unused military munition is a solid waste when any of the following occurs:

7.1.1.1.1. The munition is abandoned by being disposed of, burned, detonated (except during intended use), incinerated, or treated prior to disposal; or

7.1.1.1.2. The munition is removed from storage in a military magazine or other storage area for the purpose of being disposed of, burned, or incinerated, or treated prior to disposal, or

7.1.1.1.3. The munition is deteriorated or damaged (e.g., the integrity of the munition is compromised by cracks, leaks, or other damage) to the point that it cannot be put into serviceable condition, and cannot reasonably be recycled or used for other purposes; or

7.1.1.1.4. An authorized military official has declared the munition a solid waste.

7.1.1.2. A used or fired military munition is a solid waste:

7.1.1.2.1. When transported off range or from the site of use, where the site of use is not a range, for the purposes of storage, reclamation, treatment, disposal, or treatment prior to disposal; or

7.1.1.2.2. If recovered, collected, and then disposed of by burial, or landfilling either on or off a range.

7.1.1.3. For purposes of RCRA section 1004(27), a used or fired military munition is a solid waste, and, therefore, is potentially subject to RCRA corrective action authorities under section 3004(u) and (v), and section 3008 (h), or imminent and substantial endangerment authorities under section 7003, if the munition lands off-range and is not promptly rendered safe and/or retrieved. Any imminent and substantial threats associated with any remaining material must be addressed. If remedial action is not feasible, the operator of the range must maintain a record of the event for as long as any threat remains. The record must include the type of munition and its location (to the extent the location is known). For further clarification see 40 CFR §266.202 under Definition of Solid Waste.

7.1.2. The Environmental Protection Agency (EPA) promulgated the Munitions Rule (MR) (62 FR 6621, February 12, 1997) to define when chemical and conventional military munitions become hazardous waste and to provide for the safe storage and transportation of such waste. The MR sets forth two approaches for the storage of waste military munitions: (1) a Conditional Exemption from certain Resource Conservation and Recovery Act (RCRA) requirements and (2) a new RCRA storage unit standard (i.e., Subpart EE, of Parts 264 and 265). This Chapter establishes additional requirements for storage of waste military munitions.

7.2. Waivers and Exemptions.

7.2.1. Conditional Exemption Storage. Waivers and exemptions from this standard are not authorized for ammunition and explosives storage facilities (ammunition storage units {ASU}) storing Conditional Exemption waste military munitions.

7.2.2. RCRA Storage. Waivers and exemptions from this Standard will only be available to units storing waste munitions under RCRA unit standards (e.g., Subpart EE). However, after 31 December 1999, the Secretary of the Air Force must approve all such waivers and exemptions, both existing and new. This approval may not be delegated.

7.3. Requirements for Storage of Waste Military Munitions Under Conditional Exemption.

7.3.1. DOD Components storing waste military munitions under Conditional Exemption must comply with 40 CFR §266.205(a). (***Note***: The MR that established Conditional Exemption does not apply to chemical agents or chemical munitions.)

7.3.2. Each installation must maintain records, for a minimum of 3 years from the last day the waste munitions were stored, that describes:

7.3.2.1. The type of waste military munitions stored by standard nomenclature, Lot Number, Federal Supply Class (FSC), National Stock Number (NSN), Department of Defense Ammunition Code (DODAC), and condition code. The quantity of each type waste military munitions stored.

7.3.2.2. The date that each military munitions, by type, was identified as waste.

7.3.2.3. The last storage date for each, by type, waste military munitions.

7.3.2.4. The storage location or locations (e.g., building number or storage pad, and grid coordinates) used.

7.3.2.5. The disposition (e.g., destroyed, demilitarized, shipped) and date of action, by type, of the waste munitions.

7.3.2.6. When applicable, the sending and receiving sites for those waste military munitions received from or shipped to off-site sources.

7.3.3. Physically separate (e.g., on a separate pallet or shelf, etc.) waste military munitions from non-waste military munitions when both are stored in the same ASU.

7.3.4. Clearly mark the segregated waste military munitions to ensure proper identification.

7.3.5. Store waste munitions under Conditional Exemption in ASUs that comply (without waiver or exemption) with the provisions of this standard. Each ASU storing waste military munitions or explosives under Conditional Exemption must be included in a DDESB-approved explosives safety site plan that the installation keeps on file. Those portions of the site plan addressing ASUs storing waste military munitions under Conditional Exemption shall be made available to appropriate Federal or State environmental regulatory authority upon request.

7.3.6. Have Standard Operating Procedures (SOPs) or plans that are designed to provide safety, security, and environmental protection. These plans will be coordinated with the appropriate Federal, State, and Local emergency response authorities (e.g., law enforcement, fire departments, hospitals, and etc.) and established planning committees.

7.4. Loss of Conditional Exemption.

7.4.1. The unpermitted or uncontrolled detonation, release, discharge, or migration (e.g., loss or theft, or as a result of fire or explosion, etc.) of waste military munitions out of any storage unit that might endanger human health or the environment will result in the immediate loss of Conditional Exemption for those waste military munitions. Incidents of this nature and the loss of Conditional Exemption require reporting per paragraph **7.6.** below.

7.4.2. The appropriate Federal or State environmental regulatory authorities may withdraw Conditional Exemption based on review or inspection of the installation's or responsible activity's compliance with the requirements for storage of waste military munitions under Conditional Exemption. The Air Force Safety Center (AFSC) may, at any time, restrict an activity from using Conditional Exemption. In addition, the DDESB or AFSC, upon discovery of a condition that could warrant loss of Conditional Exemption, will report the condition to the commander of the installation or responsible activity.

7.4.3. If Conditional Exemption is lost, the waste military munitions are subject to other RCRA hazardous waste regulations. The installation or responsible activities must obtain any required RCRA permits because of the loss of Conditional Exemption.

7.4.4. Installations and responsible activities may apply for reinstatement of Conditional Exemption per 40 CFR §266.205.

7.5. Other Storage Standards.

7.5.1. Many States regulate waste management activities, including the storage of waste military munitions. In the event such State regulations conflict with Air Force Explosives Safety Standards, the Air Force Safety Center will attempt to resolve the conflict. For those issues that cannot be resolved, AFSC will notify the DDESB of any irreconcilable conflict of State law, regulation, or directive with these or other DOD or Military Component explosives safety standards. The Chairman, DDESB, will review the law, regulation, or directive for any potential impact on explosives safety and will assist AFSC, in coordination with the Deputy Under Secretary of Defense (Environmental Security) (DUSD{ES}), in resolving such regulatory conflicts. Nothing in this paragraph shall affect the component's right to seek review of the State law, regulation, or directive in a court of competent jurisdiction.

7.6. Reporting. In addition to other applicable reporting requirements, installations and responsible activities will notify AFSC/SEW (through MAJCOM), the appropriate Federal or State environmental regulatory authority, and established local committees as follows:

7.6.1. Telephonically or electronically (by e-mail message or facsimile) within 24 hours from the time the installation or responsible activity becomes aware of any unpermitted or uncontrolled detonation, release, discharge, or migration of waste military munitions out of any storage unit (e.g., loss or theft, or as a result of fire or explosion, etc.) that may endanger human health or the environment.

7.6.2. In writing, if the initial report was telephonic, within 5 days from the time the installation or responsible activity becomes aware of any unpermitted or uncontrolled detonation, release, discharge, or migration of waste military munitions out of any storage unit (e.g., loss or theft, or as a result of fire or explosion, etc.) that may endanger human health or the environment. Follow-up reports to AFSC/

SEW are only required when pertinent information, which was not previously reported, becomes known.

7.7. Closure of Facilities Storing Waste Munitions Under Conditional Exemption.

7.7.1. When an ASU that stored waste military munitions under Conditional Exemption is permanently taken out of service for the storage of non-waste and waste military munitions, installations and responsible activities will ensure that such ASUs are appropriately closed.

7.7.2. Installations or responsible activities must notify the appropriate Federal or State environmental regulatory authority in writing at least 45 days before the closure activities begin. Initiation of these closure procedures should occur within 180 days after the date the decision is made to permanently stop using the ASU for the storage of military munitions.

7.7.3. Upon completion of closure activities, a "certification of closure," signed by the installation or responsible activity commander, or other equivalent level authority, and by an independent (i.e., an individual not assigned within the commander's or equivalent-level authority's chain of command) registered professional engineer must be submitted to the appropriate Federal or State environmental regulatory authority within 90 days of completing the closure activities.

7.7.4. The certificate of closure must state, at a minimum, that each of the explosives safety requirements in **Chapter 6** have been met and that waste military munitions and residues are removed in such a manner as to protect the public and the environment consistent with the planned use of the ASU and of the property.

7.7.5. If closure certification cannot be rendered, the installation or responsible activity must contact the appropriate Federal and State environmental regulatory agency to determine the appropriate course of action.

7.8. Discontinuance of use for the Storage of Waste Munitions. When an ASU that stored waste military munitions under Conditional Exemption is permanently taken out of service for the storage of waste military munitions but is to continue in service for the storage of non-waste military munitions, installations and responsible activities will ensure that waste military munitions and residues are removed.

7.9. Closure of Facilities Storing Waste Military Munitions Under RCRA.

In addition to those explosives safety requirements in **Chapter 6**, closure procedures for those sites operating under existing RCRA permits will follow those closure requirements stipulated in the respective permit.

TIMOTHY A. PEPPE, Maj Gen, USAF
Chief of Safety

Attachment 1

GLOSSARY OF REFERENCES AND SUPPORTING INFORMATION

Abbreviations and Acronyms

AF—Air Force

AFMC—Air Force Materiel Command

AFOSH—Air Force Occupational Safety and Health

AFRC—Air Force Reserve Command

AGE—Aerospace Ground Equipment

ALC—Air Logistics Center

ALCM—Air Launched Cruise Missile

AMRAAM—Advanced Medium-Range, Air-to-Air Missile

ANG—Air National Guard

ANSI—American National Standards Institute

ASME—American Society of Mechanical Engineers

AFSC—Air Force Safety Center

AUR—All-Up-Round

AWG—American Wire Gauge

BES—Bioenvironmental Engineering Services

BRU—Bomb Rack Unit

BTO—Base Transportation Officer

cal/cm2—Calories Per Square Centimeter

CBGS—Confined by Ground Surface

CBM—Confined by Missile

CBR—Chemical Biological Radiological

CBU—Cluster Bomb Unit

CFA—Controlled Firing Area

CFR—Code of Federal Regulation

CNU—Container Unit

COE—Corps of Engineers

CONUS—Continental United States

CSC—Central Security Control

DBMS—Director of Base Medical Services

DDESB—DoD Explosives Safety Board

DFARS—Defense Federal Acquisition Regulations Supplement

DoD—Department of Defense

DOT—Department of Transportation

EED—Electroexplosive Devices

EIDS—Extremely Insensitive Detonating Substances

EMR—Electromagnetic Radiation

EOD—Explosive Ordnance Disposal

EOR—End of Runway

ERO—Engine Running On/Off

ERP—Effective Radiated Power

ES—Exposed Site

FAA—Federal Aviation Administration

FACC—Fire Alarm Communication Center

FAE—Fuel-Air-Explosives

FAR—Federal Acquisition Regulation

FLIP—Flight Information Publication

GOV—Government Owned Vehicle

GP—General Purpose

HARM—Hi-Speed, Antiradiation Missile

HAS—Hardened Aircraft Shelter

HC—Hexachloroethane

HE—High Explosive

HEI—High Explosive Incendiary

HEW—High Explosive Weight

HMMV—Highly Mobile Motorized Wheeled Vehicle

IB—Inhabited Building

ICBM—Intercontinental Ballistic Missile

IFR—Instrument Flight Rules

IHE—Insensitive High Explosive

IL—Intraline

IM—Intermagazine

JROD—Jet Remote Opening Device

kg—Kilogram

KV—Kilovolt

LARA—Launch Area Risk Analysis

LCF—Launch Control Facility

LCL—Less Than Carload

LF—Launch Facilities

LOX—Liquid Oxygen

LP—Liquefied Petroleum

LSRM—Large Solid Rocket Motor

m—Meter

MAJCOM—Major Command

MCE—Maximum Credible Event

MCP—Military Construction Program

MER—Multiple Ejector Rack

MHT—Minuteman Handling Team

mm—Millimeter

MSA—Munitions Storage Area

MWR—Morale, Welfare, and Recreation

NATO—North Atlantic Treaty Organization

NEC—National Electric Code

NEW—Net Explosive Weight

NEWQD—Net Explosive Weight for Quantity Distance

NFPA—National Fire Protection Association

NGB—National Guard Bureau

NPW—Net Propellant Weight

NSN—National Stock Number

OI—Operating Instruction

ORM—Operational Risk Management

OSHA—Occupational Safety and Health Administration

PDC—Programming, Design and Construction

PES—Potential Explosion Site

PNAF—Prime Nuclear Airlift Force

POL—Petroleum, Oil and Lubricants

POV—Privately Owned Vehicle

psi—Pounds Per Square Inch

PTR—Public Traffic Route

PWP—Plasticized White Phosphorus

Q-D—Quantity-Distance

QA—Quality Assurance

RCRA—Resource Conservation and Recovery Act

R-F—Radio-Frequency

RFTF—Response Force Tactical Facility

RPV—Remotely Piloted Vehicle

RSCA—Rocket Storage, Checkout, and Assembly

RSU—Runway Supervisory Unit

SCBA—Self-Contained Breathing Apparatus

SCPS—Survivable Collective Protection System

SOFA—Status of Forces Agreement

SPO—System Program Office

SSCBM—Shipping and Storage Containers, Ballistic Missile

STAMP—Standard Air Munitions Package

TE—Transporter Erector

TER—Triple Ejector Rack

TLV—Threshold Limit Value

TM—Technical Manual

TO—Technical Order

TOFC—Trailers on Flat Cars

TP—Target Practice

UL—Underwriters Laboratories

UN—United Nations

VFR—Visual Flight Rules

WCDO—War Consumables Distribution Objective

WP—White Phosphorus

WRM—War Reserve Materiel

WSA—Weapons Storage Area

Terms

The following terms and phrases commonly used in explosives safety operations are described here to provide uniformity. Use standard and service dictionaries for other terms. Also see MIL-STD-444, Nomenclature and Definitions in the Ammunition Area.

Aboveground Magazine—Any building or structure, except an operating building, used for the storage of explosives. Magazines are of two general types: igloo (earth-covered) and aboveground (no earth covering). An aboveground magazine is any structure or facility, without sufficient earth covering, used for the storage of explosives. For igloo see "Earth-covered Magazine". Also includes open air munitions stocks, trucks, trailers, railcars or cargo aircraft loaded with explosives.

Administration Area—The area in which administrative offices for the entire organization are located, excluding those offices located near and directly serving explosives storage and operating areas.

Aircraft Battle Damage Repair Sites—These are sites where battle damage is simulated on aircraft hulls by detonating up to two ounces of explosives packed inside a length of steel pipe.

Aircraft Explosives Cargo Parking Area—Any area, commonly called a hot cargo pad, specifically designated for parking aircraft loaded with transportation-configured explosives cargo, or those being loaded, unloaded, or awaiting loading.

Aircraft Shelters—Defined as being one of the following type structures.

USAFE TAB VEE. 24-feet radius semicircular arch, 48 feet wide by 100.8 feet long, front closure prow shaped, vertically hinged, recessed door.

First Generation Aircraft Shelter (TAB VEE Modified). 24-feet radius semicircular arch, 48 feet wide by 100.8 feet long, front closure prow shaped, laterally opening, external flush door. (First Generation Aircraft Shelter)

Second Generation Aircraft Shelter. 29.4-feet double-radius, pseudoelliptical arch, 82 feet wide by 124 feet long, vertical reinforced concrete panel, laterally opening, sliding, external flush door.

Third Generation Aircraft Shelter. 27.4-feet double-radius, pseudoelliptical arch, 70.8 feet wide by 120 feet long, vertical reinforced concrete panel, laterally opening, sliding, external flush door. Personnel door at one side with barricade.

Korean TAB VEE. 24-feet radius semicircular arch, 48 feet wide by 100.8 feet long, open front. Exhaust port in rear wall protected only by a blast deflector barricade (otherwise identical to USAFE TAB VEE). When hardened doors are installed, consider these shelters as TAB VEE Modified.

Korean Flow-Through. Constructed from third generation drawing but omits front door, back wall, and personnel door, 70.8 feet wide by 120 feet long, 27.4-feet double-radius, pseudoelliptical arch.

Ammunition—Any munition designed to be thrust from a gun barrel by expanding gases resulting from

burning propellant. Rockets would not be included in this definition.

Ammunition Storage Unit (ASU) —All types of explosives storage magazines including outdoor or indoor, open storage areas, sheds, bunkers, and earth-covered and above-ground magazines.

Auxiliary Storage Facility —Small facilities used to store working stocks of supplies and equipment (e.g. benchstock, packing materials, dunnage, etc) in support of an explosives location. Facilities must be sited as ware houses if they are used to store inert munitions components which are part of the accountable munitions stockpile.

Bar —This is the barometric pressure at sea level. One Bar = 14.5 psi; 3-Bar = 45 psi; 7-Bar = 100 psi.

Barricade —An intervening barrier (natural or artificial) of such type, size, and construction as to limit the effects of low angle high velocity fragments.

Blast Impulse—The product of the overpressure from the blast wave of an explosion and the time during which it acts at a given point (that is, the area under the positive phase of the overpressure versus time curve).

Buddy System—At least two persons are present so that one may give assistance to the other if an emergency occurs.

Bulk Petroleum—Containerized fuel, usually in quantities of 5,000 gallons or more, and used to generate and sustain a unit's combat equipment and forces. Does not apply to fuel/gases used to support a single building or group of facilities.

Burning Areas—Locations sited for disposal of ammunition and explosives by burning.

Change House—A building for employees to change into and out of work clothes. Such buildings may be provided with sanitary facilities, drinking fountains, lockers, and eating facilities.

Classification Yard—A railroad yard used for receiving, dispatching, classifying, and switching cars that contain explosives.

Clear Zone—The area surrounding a potential explosion site which is determined by the required inhabited building separation. The inhabited building separation will be based on the sited, waivered, exempted, or actual explosives limits of the potential explosion site, whichever is greatest.

Combat Aircraft Parking Area—An aircraft parking area meeting both explosives safety and airfield criteria.

Combat Aircraft Parking Group —Two or more aircraft loaded with combat-configured explosives that are parked at less than intermagazine distance.

Combat Configured Aircraft—Any aircraft armed with explosives used for direct combat. This could be fighters, bombers, or armed cargo aircraft such as the AC-130.

Compatibility—Ammunition or explosives are considered compatible if they may be stored or transported together without significantly increasing either the probability of a mishap or, for a given quantity, the magnitude of the effects of such a mishap.

Concurrent Operations—Two or more explosives operations within a single facility or location.

Confined by Ground Surface (CBGS)—This is a failure mode of a liquid propellant launch vehicle that does include impact velocities of the liquid propellant tankage (i.e., fallback onto the pad immediately after liftoff). Propellant mixing occurs as well as ignition.

Confined by Missile (CBM)—This is a failure mode of a fueled liquid propellant launch vehicle on a launch pad in which an interior bulkhead failure occurs allowing the two propellants to come into contact. Ignition occurs, but there is effectively no impact velocity associated with mixing of the two propellants.

Dangerously Unserviceable Munition—A munition or explosives that has a critical defect identified in the specific item technical order. This defect can result is a higher probability of inadvertent activation or functioning. These may include partially or fully armed or partially expended, broken, damaged, or leaking items, etc., (not necessarily ADRs).

Deflagration—A rapid chemical reaction in which the output of heat is enough to enable the reaction to proceed and accelerate without input of heat from another source. The effect of a true deflagration under confinement is an explosion. Confinement of the reaction increases pressure, rate of reaction, and temperature and may cause transition into a detonation.

Demilitarization—To mutilate, disarm, or accomplish any other action required to prevent the further use of equipment and materiel for its original intended military or lethal purpose.

Designated Aircraft Parking Area—An aircraft parking area meeting airfield parking criteria.

Detonation—A violent chemical reaction within a chemical compound or mechanical mixture evolving heat and pressure. A detonation is a reaction or shock wave which proceeds through the reacted material toward the unreacted material at a supersonic velocity.

Deviation—Written authorization which allows a specific departure from a mandatory requirement of this regulation other than quantity-distance criteria.

Dividing Walls—These walls are one way of separating explosives into smaller groups to minimize the effects of an explosion and allow a reduction in Q-D separation. They may also be used to separate stocks of munitions to ensure compliance with compatibility requirements. To receive credit as a dividing wall, reinforced concrete walls must either meet Substantial Dividing Wall criteria or be designed in accordance with the criteria in TM5-1300, *Structures to Resist the Effects of Accidental Explosions*.

DoD Component—An organization within the Department of Defense (e.g. the US Air Force.)

DoD Explosives Safety Board (DDESB)—The DoD organization charged with promulgation of ammunition and explosives safety policy and standards, and with reporting on the effectiveness of the implementation of such policy and standards.

DoD Operations/Storage—Explosives operations conducted by DoD, or other federal agency, under DoD oversight, procedure, or control and in accordance with the explosives safety standards of DoD 6055.9-STD. This term is applicable only to DoD and federal explosives operations, and to non-DoD commercial enterprises directly supporting DoD and federal explosives contractual efforts.

Earth-Covered Magazine—Box-type A magazines constructed according to NAVFAC drawings 1404000 through 1404007 and box-type B magazines constructed according to NAVFAC drawings 1404018 through 1404025.

Electric Power House—An electric power generation facility that provides prime or stand-by auxiliary electrical power where no commercial power is available to meet operational requirements. Also called an electric power plant. A powerhouse can contain generators, fuel storage and supply, switch gear, and transformers (if required). Powerhouses supplying primary power to an installation or group of facilities are normally staffed. Power plants supplying only stand-by auxiliary power to individual facilities are usually unoccupied.

Electric Substations—The point of supply for a base electrical distribution system or portion thereof. The main substation is usually the dividing point between government facilities and those of a utility company. A substation subdivides the power supply and contains protective and control devices for the incoming supply circuit, transformers (when required), voltage regulators, and indicating or recording instruments. A substation that has no transformers is sometimes called a switching station. (Note: Substations do not generate power.)

Electric Transformer Station—An electrical facility which converts incoming power from the distribution system to lower voltage suitable for use directly by lights, motors, and other appliances.

Electroexplosive Device (EED)—An explosive or pyrotechnic component that initiates an explosive, burning, electrical, or mechanical train and is activated by the application of electrical energy.

Electromagnetic Radiation (EMR)—Radiation made up of oscillating electric and magnetic fields and propagated with the speed of light. Includes gamma radiation, x-rays, ultraviolet, visible and infrared radiation, and radar and radio waves.

Energetic Materials—Energetic materials are chemical compounds, or mixtures of chemical compounds, that are divided into three groups according to use: explosives , propellants, and pyrotechnics. Explosives and propellants that have been properly initiated evolve large volumes of hot gas in a short time. The difference between explosives and propellants is the rate at which the reaction proceeds. In explosives, a fast reaction produces a very high pressure shock in the surrounding medium. This shock is capable of shattering objects. In propellants, a slower reaction produces a lower pressure over a longer period of time. This lower sustained pressure is used to propel objects. Pyrotechnics evolve large amounts of heat but much less gas than propellants or explosives. Various external stimuli can cause release of the energy contained in energetic materials. Knowing the response of individual energetic materials to specific stimuli is important from the point of view of safety. Energetic materials are sensitive to four external stimuli. These are: impact, shock, electrostatic, and thermal. Eliminating or controlling these stimuli are key to eliminating the unintentional initiation of energetic material. The focus of this manual is on these four areas. The hazards associated with energetic material are blast, fragments, mass fire, fire and toxicity.

Entry Control Point (ECP)—A location or facility used to control pedestrian or vehicular access to controlled or restricted areas. It is commonly found at the entrance to munitions storage areas and combat aircraft parking areas. If it is a permanent facility, it is sometimes also called a Gate House.

Evaluation Zone—The area around an ES where the PESs, if filled to maximum capacity, could violate Q-D to that ES. (Remember a PES is also an ES). This zone determines the PESs that must be listed on the AF Form 943 for evaluation.

Exception—Is the inclusive term for any departure from the requirements of this manual.

Exemption—A relatively long-term departure from a mandatory requirement of the quantity-distance standards of this regulation.

Explosion Proof—Used in referring to electrical equipment; specifically, to equipment enclosed in a case that can withstand an internal burning or explosion of elements inside the case, and can prevent ignition by spark, flash, or explosion of any outside gas or vapor surrounding the enclosure.

Explosive—A substance or mixture of substances which under external influences, is capable of rapidly releasing energy in the form of gases and heat.

Explosives—All ammunition, munition fillers, demolition material, solid rocket motors, liquid propellants, cartridges, pyrotechnics, mines, bombs, grenades, warheads of all types, explosives elements of ejection and aircrew egress systems, air-launched missiles and those explosive components of missile systems and space systems, and assembled kits and devices containing explosive material. Explosives, explosives weight, net weight, and other like terms also refer to the fillers of an explosive item. Fillers may be explosive mixtures, propellants, pyrotechnics, and other toxic substances. This term does not include liquid fuels and oxidizers that are not used with missiles, rockets, and other such weapons or explosive items.

Explosives Area or Location —Any area or location specifically designated and set aside from other areas and used for manufacturing, testing, maintenance, storage, demilitarization, shipping and receiving, and other similar type explosives operations. Such areas may also be referred to as explosives parking or loading areas when armed or explosives-loaded aircraft are involved.

Explosives Content (of a PES)—Determination based on the type, quantity, packaging and hazard class division of the explosives present. Expressed as a net explosives weight (NEW) in pounds.

Explosives Facility —Any structure or location containing explosives, except aircraft and aircraft parking areas.

Explosives Hazard—Any condition which may result in the occurrence of an explosives mishap or contribute to the severity of an explosives mishap should one occur.

Explosives-Loaded Aircraft—An aircraft is "explosives-loaded" when it carries munitions or explosives, internally or externally. The term does not include explosive components of aircrew escape systems or pyrotechnics installed in survival and rescue kits.

Explosives Operations Office —Any office adjacent to or within an explosives area in which operational administrative functions pertaining to explosives are performed. Also known as a field office.

Explosives Safety.—A condition where operational capability, personnel, property, and the environment are protected from the unacceptable effects of an ammunition or explosives mishap.

Explosives Safety Distance (Quantity-Distance)—An expression of the quantity versus distance principle involved, or the toxic hazard distance used in determining acceptable separations between given explosives sources and given exposures to the hazard. For the purposes of this regulation, the term "Quantity-Distance" or "Q-D" will be used (see "quantity-distance").

Explosives Safety Management—A process of risk management, consisting of policies, procedures, and engineering controls, that reduces the probability and the consequences of an ammunition or explosives mishap.

Explosives Site Plan —Package consisting of all information necessary to assess compliance with explosives safety standards (especially quantity-distance standards) for an explosives storage or operating location. Once approved, this package identifies storage and operational limitations, and provides a tool for management of risks associated with the storage or operating location. Note: An ESP can also be prepared for a non-explosives exposed site.

Explosives Sited Combat Aircraft Parking Area—An aircraft parking area meeting both explosives safety and airfield criteria.

Explosives Storage Area —A designated area of explosives-containing facilities set aside for the exclusive storage or "warehousing" of the base explosives stocks. Facilities include igloos, magazines,

warehouses, operating buildings, modules, revetments, and outdoor storage pads.

Exposed Explosives —Explosives that are open to the atmosphere (such as unpackaged bulk explosives, or disassembled or open components) and that are susceptible to initiation directly by static or mechanical spark, or create (or accidentally create) explosive dust, or give off vapors, fumes, or gases in explosives concentrations. This also includes exudation and explosives exposed from damaged munitions such as gun powder or rocket motors.

Exposed Sites (ES) —Any permanent structure, utility, POL, at risk from either blast or fire effects of a Potential Explosion Site (PES). An ES may or may not contain explosives. Previously known as 'Target' (in waiver requests) or acceptor (in explosives testing).

Field Office—See "explosives operations office."

Fire Brand—A projected burning or hot fragment whose contained heat may be transferred to a receptor. The magnitude of the thermal energy transferred determines the class of firebrand.

Firebreaks—An area free of all readily combustible material, such as dry grass, leaves, brush or dead wood.

Fire-Resistive (Structural)—The type of construction in which the structural members, including walls, partitions, columns, floor, and roof construction are of "noncombustible" materials that either do not burn or have specific fire resistance ratings in terms of hours.

Fire Retardant—Combustible materials or structures that have been treated or had surface coverings designed to retard ignition or fire spread.

Fire Wall—A wall of fire-resistive construction designed to prevent the spread of fire from one side to the other. Also referred to as a fire division wall.

Flightline Munitions Holding Area—A designated area where munitions and components are temporarily positioned awaiting transfer to aircraft. Examples are Ready Service Igloo, Ready Service Magazine, Ready Service Module, Standard Air Munitions Package (STAMP) marshalling area, and Aerial Port of Embarkation (APOE) marshalling area.

Fragmentation—The breaking up of the ballistic case containing a chemical compound or mechanical mixture when an explosion takes place. Fragments may be complete items, subassemblies, or pieces thereof, as well as pieces from the building, aircraft, revetment, equipment, or other segments of the environment.

Fragment Distance—The limiting range, based on a specific density of hazardous fragments, expected from the type and quantity of explosives involved. Used in establishing certain quantity-distance (Q-D) criteria, a fragment is considered hazardous when it has an impact energy of 58 foot-pounds or greater. Hazardous fragment density is a density of hazardous fragments exceeding one per 600 square feet.

Fragmenting Munitions—Items having cases designed to fragment in a specified manner. Examples include continuous rod warheads, items with scored cases and items containing pre-formed fragments. Items fitting this definition are usually air-to-air missile warheads such as the Sparrow, Sidewinder, and AMRAAM.

Gatehouse—A permanent facility used to control pedestrian and vehicular access. Sometimes referred to as an Entry Control Point (ECP) when used at the entrance to controlled or restricted areas. Gatehouses used at base entrances are sometimes called Traffic Check Houses and cannot be considered related to

explosives operations.

Government Assets—Government assets may include but are not limited to: facility, ground support equipment, airborne vehicle equipment, real property, explosives, and other items owned by the DoD and its components. It also includes property owned by NASA or other government agencies.

Guard Shelter—A location or facility located at a single PES and used solely by the person guarding the PES. It is usually a temporary structure providing protection from the weather for a single guard. An example would be a temporary one-person structure used by someone guarding a nuclear weapons-loaded aircraft.

Hazard Classification—Identifies the hazardous characteristics of explosive items by their assignment to established hazard categories governing storage and transportation. These categories are: hazard class/ division; storage compatibility group; Department of Transportation (DOT) class; and DOT marking.

Hazardous Locations for Electrical Equipment—Locations where flammable gases or vapors are, or may be, present in an explosive or ignitable mixture, or where combustible dust or easily ignitable particles or fibers may be present.

Hazardous Operation (Space Launch)—A specific operation requiring the establishment of a Safety Control Area; nonessential personnel will be evacuated for the Safety Control Area. Range Safety designates certain functions and procedures as hazardous operations when LSRM segments are being processed. Because these operations have a greater than normal potential for causing mishaps, certain controls are implemented. A solid rocket motor segment being lifted by a crane is an example of a hazardous operation. In addition to the activation of a Safety Control Area, these operations require supervision by people designated as the individuals responsible for safety standards compliance.

High Explosives Equivalent or TNT Equivalent—The amount of a standard explosives which, when detonated, will produce a blast effect comparable to the effect that results at the same distance from the detonation or explosion of a given amount of the material for which performance has been evaluated. It is usually expressed as a percentage of the total net weight of all reactive materials contained in the item or system. (For the purpose of this regulation, TNT is used for comparison.)

Holding Area Munitions (HAMS)—Designated location on the flightline where built up munitions are temporarily placed pending delivery to combat aircraft or return to storage. HAMS must meet flightline munitions holding area Q-D criteria.

Holding Yard—A specified area designed or used to accommodate explosives-laden carriers before movements to a storage area or to their next destination. (Called "wharf yard" at seaports.)

Igloos (All Types)—See "Earth-covered magazine."

Improvised Explosive Device (IED)—A device placed or fabricated in an improvised manner incorporating destructive, lethal, noxious, pyrotechnic or incendiary chemicals, designed to destroy, disfigure, distract or harass. It may incorporate military stores, but are normally devised from non-military components.

Incapacitating Agent—An agent that produces temporary physiological or mental effects, or both, which will render individuals incapable of concerted effort in the performance of their assigned duties. (Excludes riot control agent.)

Incremental Distance—The distance based solely on overpressure protection (K factor) without regard to fragment protection. (Example: For 5000 pounds net explosives weight (NEW), the incremental K40/

50 distance would be 685 feet instead of the 1,250 feet inhabited building (IB) distance separation required because of minimum fragment protection.)

Intrusive Weapons Maintenance Operations—Operations which extend within the sealed case of a weapon.

Inert—Contains no explosives, active chemicals, or pyrotechnics, but is not necessarily noncombustible.

Inhabited Building—All buildings, locations, or structures, other than explosives locations, used in whole or in part as habitations or places of assembly for personnel, both within and outside military establishments not directly related to explosives operations. For example: schools, churches, residences (quarters), passenger terminals, shopping areas, factories, hospitals, theaters, dining halls, or hangars.

Inhabited Building Distance (IBD)—The minimum allowable distance between an inhabited building and a potential explosion site.

Inspection Station—A designated location at which vehicles and railcars containing ammunition or explosives are inspected.

Installed Explosives—Explosives items installed on aircraft or contained in survival and rescue kits such as flares, signals, egress system components, squibs, and detonators for jettisoning external stores, engine-starter cartridges, fire extinguisher cartridges, destructors in electronic equipment, explosives components of emergency equipment, and other such items or materials necessary for safe flight operations.

Integral Part of a Space Launch Facility—Any permanent structure or item in the immediate vicinity of the launch pad or test facility that directly supports launch/test operations.

Interchange Yard—An area set aside for the exchange of railroad cars or vehicles between the common carrier and DoD activities.

Intermagazine Distance (IM)—The minimum distance allowed between two explosives locations. This distance is expected to prevent simultaneous detonation. This distance can not be waived.

Intraline Distance (IL)—The minimum distance allowed between any two operating locations or other designated exposures. This distance is expected to prevent propagation.

Joint Storage—DoD/non-DoD explosives storage under DoD control.

Joint Use Airfield —An airfield serving both DoD and commercial aircraft. An airfield serving solely DoD, DoD chartered, or non-DoD aircraft on DoD authorized business is not joint use. ATF, DOE, DEA, and other federal use aircraft are not considered commercial; therefore, joint-use standards do not apply.

Joint Use Space Launch Facility—A space launch facility serving both governmental and an authorized commercial users.

Launch Complex—A group of facilities used to assemble, test, check out and launch spacelift vehicles. A launch complex should include, for example, two similar launch pads, ground liquid propellant tankage, solid rocket motor facilities, etc.

Launch Mount—The load bearing base, apron, or platform upon which the centerline of a rocket, missile, or space vehicle rests during launching.

Launch Pads—The load-bearing base, apron, or platform upon which a rocket, missile, or space vehicle and its launcher rest during launching.

License —Formal permission to store explosives or munitions outside the sited explosives storage area.

Light Construction (Structure)—Light metal structure or concrete masonry unit (block wall) construction without concrete fill or reinforcement; example - butler type buildings.

Liquid Propellants—Any combustible liquid fed to the combustion chamber of a rocket engine.

Loading Docks—Facilities, structures or locations specifically designated for transferring material to or from vehicles, railcars, or cargo-type aircraft.

Magazine—Any building or structure, except an operating building, used for the storage of explosives. Magazines are of two general types: igloo (earth-covered) and aboveground (no earth covering). An aboveground magazine is any structure or facility, without sufficient earth covering, used for the storage of explosives. For igloo see "Earth-covered Magazine."

Magazine Area—Same as "Explosives Storage Area."

Mass-Detonating Explosives—High explosives, black powder, certain propellants and pyrotechnics, and other similar explosives. They may be alone or in combination, or loaded into various types of ammunition or containers. Most of the entire quantity can explode instantaneously when a small portion is subjected to fire, to severe concussion or impact, to the impulse of an initiating agent, or to the effect of a considerable discharge of external energy. Such an explosion will generally cause severe structural damage to adjacent objects. The explosion may cause detonation of other items of ammunition and explosives stored near enough to (and not adequately protected from) the initially exploding pile, so that the two or more quantities must be considered as one for quantity-distance (Q-D) purposes.

Maximum Credible Event (MCE)—The largest quantity of explosives expected to explode at one time when an item in a stack or group of items is initiated, or when explosives are stored at less than intermagazine distance apart.

Mishap—An accident or an unexpected event involving DoD ammunition and explosives.

Modules—A barricaded area composed of one or more connected cells (revetments) with hard surface storage pads separated from one another by the prescribed barricade. A light metal building may be used in individual cells.

Munitions—See "Explosives."

Munitions Residue—Includes scrap powder, initiating or sensitive explosives, sweepings from explosive operations, and explosive contaminated rags.

Net Explosive Weight (NEW) —The total quantity, expressed in pounds, of explosives material or pyrotechnics in each item or round.

Net Explosives Weight for Quantity Distance (NEWQD)—The total quantity, expressed in pounds, of high explosives equivalency in each item or round to be used when applying quantity-distance (Q-D) criteria or other standards. The NEWQD is equal to the NEW unless hazard classification testing has shown that a lower weight is appropriate for Q-D purposes. If the NEWQD is less than the NEW, the reason is usually that propellant or other substances do not contribute as much to the blast effect as the same amount of high explosives would.

Non-DoD Operations/Storage—Explosives operations/storage conducted on DoD property in accordance with **Table 1.1.**, BATF, FAA or other federal, state, and local explosives safety requirements. Under these type operations, DoD will be responsible only for insuring IM standards are met as outlined

in explosives site plan submissions. This does not constitute “DoD oversight” as intended in the definition of “DoD Operations/Storage.”

Non-explosives Facility—AF owned facility where administrative functions or operations are conducted that provide direct support to an AF explosives area or explosives operation.

Non-Robust Munitions—Those items not meeting the definition of Robust or Fragmenting munitions. Examples include torpedo warheads, underwater mines, most CBUs, TOW, Hellfire, and Stinger missiles.

Nuclear Weapon—A complete assembly (i.e., implosion type, gun type, or thermonuclear type) in its intended ultimate configuration which, upon completion of the prescribed arming, fuzing, and firing sequence, is capable of producing the intended nuclear reaction and release of energy. (JP1-02)

Occupied Facility —A facility where personnel are usually present. Includes maintenance facilities, field offices, administrative facilities, etc. An occupied facility may at any given time not have personnel present. (See unoccupied facility.)

Operating Location—A building, facility, or site in which operations pertaining to the manufacturing, processing, handling, or assembling of ammunition and explosives are done. This includes preload facilities for aircraft multiple and triple ejector racks. However, flightline explosives loading activities are defined as "explosives areas or locations" are not operating locations.

Outdoor Storage Sites—An open location selected within an explosives area or location for storage of explosive items or components.

Overpressure—The pressure, exceeding the ambient pressure, manifested in the shock wave of an explosion.

Passenger Railroad—Any railroad which carries passengers for hire (see "public traffic route").

Potential Explosion Site (PES)—A location or facility that contains or is expected to contain explosives. Previously known as a source (in waiver requests) or donor (in explosives testing).

Propagating Explosion—The communication of an explosion (detonation or deflagration) from one potential explosion site to another by fire, fragment, or blast (shock wave), where the interval between explosions is long enough to limit the total overpressure at any given time to that which each explosion produces independently. This condition, where detonation occurs, would be evidenced by a distinct shock wave from each detonation, with a discernible pressure drop between each explosion (see "simultaneous detonation").

Public Highway—Any public street, road, or highway used by the general public for vehicular traffic.

Public Traffic Route—Any public highway, navigable stream, passenger railroad, or joint military-nonmilitary use taxiways.

Quantity-Distance (Q-D)—The quantity of explosive material and distance separation relationships that provide definitive types of protection. These relationships are based on the level of risk considered acceptable for each stipulated exposure and are tabulated in the Q-D tables. Separation distances are not absolute safe distances but are relative protective or safe distances.

Radially Aligned—Two missiles are radially aligned if the fragment pattern from either warhead intersect (90° angle) the other warhead.

Railroad—See “Passenger Railroad.”

Ready Service Storage Facility—Holding area for ammunition and explosives limited to a maximum NEW of 22,000 lbs, located between hardened aircraft shelters.

Reinforced Concrete Walls—These concrete walls vary in thickness, but are at least 12 inches thick and constructed as specified in TM5-1300. Concrete compressive strength must be 2,500 psi or greater.

Related Activity—Activities directly associated with munitions storage or operations.

Related Facility—Any non-explosives facility closely supporting a PES. It does not include utilities.

Residue—See "Munitions Residue."

Responsible Commander—The commander having responsibility for the installation safety program.

Revetment—Barricades constructed to limit or direct a blast to reduce damages from low flying fragments and limit simultaneous detonation. Often used to form modules for open storage of munitions or protected aircraft parking.

Riot Control Agent—A chemical that produces temporary irritating or disabling effects when in contact with the eyes or when inhaled.

Risk Assessment—A method of determining and documenting hazards which may be present and controls for mitigating or eliminating those hazards.

Robust Munitions—These are munitions meeting two of the following three criteria: (1) have a ratio of the explosive weight to empty case weight less than 1.00; (2) have a nominal wall thickness of at least 0.4 inches; and (3) have a case thickness/NEW $^{1/3}$ >0.05in/lb $^{1/3}$. The following cartridges are, by definition, robust: 20, 25, and 30 mm. Other examples of robust ammunition include MK80 series bombs, M107 projectiles, Tomahawk and Harpoon penetration warheads.

Safe Haven—Temporary storage granted to DOE classified shipment transporters at DoD facilities in order to assure the safety and security of nuclear material and/or nonnuclear classified material. It also includes parking for commercial vehicles containing HC/D 1.1 or 1.3 explosives. (AFI-32-4001)

Service Magazine—An auxiliary building servicing an operation used for the intermediate storage of explosives.

Shared Launch Facility—Any space or orbital launch facility supporting both DoD and non-DoD launch services and operations, as determined by AFSC or by mutual agreement when multiple DoD military services are involved.

Simultaneous Detonation—The detonation of two or more items that are near each other, with one item detonating after the next, and with such short intervals between detonations, that the overall detonation appears to have emanated from a single item. Pressures produced by these independent detonations grow together (coalesce) within very short distances from their sources to cause peak overpressures greater than that of each independent source. Preventing simultaneous detonation is equivalent to providing intermagazine distance.

Staging for Space Launch—Staging of LSRM segments refers to a condition/configuration of the Solid Rocket Motor (SRM), while it remains in the Motor Operations and Staging Facility, until the launch complex is ready to receive it.

Static Test Stand—A location whereon liquid propellant engines or solid propellant motors are tested in place.

Substantial Dividing Walls—These walls are normally used between bays to prevent propagation of an explosion from one bay to the other. They provide limited personnel protection. They are made of reinforced concrete at least 12 inches thick. The reinforcing consists of #4 bars (1/2 inch), or larger, on 12 inch centers each way on each wall face. The bars on the two wall faces are staggered with respect to each other. For example, vertical bars on one face start 12 inches from the end and on the other face they start 6 inches from the end. Similarly, horizontal bars on one face start 12 inches from the floor and on the other face they start 6 inches from the floor.

Suspect Vehicle and Railcar Site—A designated location for placing vehicles or railcars containing explosives that are suspected of being in a hazardous condition. These sites also are used for vehicles that may be in a condition that is hazardous to their contents.

Technical Support Area for Space Launch—A personnel work station located inside a Motor Operations and Storage Facility, or an explosives operating facility. It provides a work location for test team personnel who are directly supporting the day-to-day operations, which involve explosive components.

Transportation Mode—Any in-transit movement of explosives by any mode (rail, highway, air or water) except movement by Munitions Material Handling Equipment.

Ufer Ground —A grounding system consisting of concrete with rebar or steel mesh to lower the impedance of the ground system. Concrete absorbs water and retains it for long periods. This system is used where the earth is dry or to augment other grounding systems.

Unoccupied Facility —A facility where personnel are not usually present. Includes magazines, unmanned sewerage treatment plants, hardened aircraft shelters, etc. An unoccupied facility may at any given time have personnel present. (See occupied facility.)

Utilities—Utilities include water, natural gas, steam, air lines, electrical lines, communication lines and environmental facilities or equipment. The term "Utility" does not apply to services provided to individual or group explosives facilities when that service is not also secondarily provided to other parts of the installation or community (this includes underground POL lines servicing hardened aircraft shelters). See **Table 3.3.**, Note 24 and paragraph **3.13.1.** for additional separation guidance.

Waiver—Written authority for a specific short term departure from a mandatory quantity-distance requirement of this manual. These should be corrected in less than five years.

Warehouse—These are facilities for storing material and supplies where personnel are infrequently present. The material may, or may not be associated with ammunition and explosives. Facilities must be sited as warehouses if they are used to store inert munitions components which are part of the accountable munitions stockpile. For Q-D requirements see paragraph **3.18.**

Attachment 2

SOURCES FOR NON-AIR FORCE REFERENCE PUBLICATIONS

Publication	**Source** (Note 4)
A2.1. Tariff number BOE-6000-A, Hazardous Materials Regulations of the Department of Transportation Air, Rail, Highway, Water and Military Explosives By Water, including Specifications for Shipping (see note 1)	Association of American Railroads 1920 L Street NW Washington DC 20036
A2.2. Bureau of Explosives Pamphlet No. 6 Illustrating Methods for Loading and Bracing Carload and Less-Than-Carload Shipments of Explosives and other Dangerous Articles (see note 1)	Same
A2.3. Bureau of Explosives Pamphlet No. 6C, Illustrating Methods for Loading and Bracing Carload and Less-Than-Carload Shipments of Loaded Projectiles, Loaded Bombs, etc. (see note 1)	Same
A2.4. Military Standard 444 (MIL-STD--444 and Definitions in the Ammunition Area (see note 2)	Naval Nomenclature Publications and Forms Center 5801 Tabor Avenue Philadelphia PA 19120
A2.5. Title 42, Code of Federal Regulations Part 72.25, Etiologic Agents (see note 1)	Superintendent of Documents US Government Printing Office Washington DC 20402
A2.6. Title 49, Code of Federal Regulations, Transportation (see note 1)	Same
A2.7. Underwriters Laboratories Bulletin 474, Dehumidifiers (see note 1)	Underwriters Laboratories 207 East Ohio St. Chicago IL 60611
A2.8. Official Air Transport Restricted Tariff No. 6D (ICAO No. 37/CAB No.82) (see note 1)	Airline Tariff Publishers Dulles International Airport PO Box 17232 Washington DC 20041
A2.9. American National Standards Institute Safety Codes (see note 1)	American National Stds Institute 1430 Broadway New York NY 10018
A2.10. American Society of Mechanical Engineers Standards (Eleven Sections) (see note 1)	American Society of Mechanical Engineers 345 East 47th St New York NY 10017

A2.11. DoD Flight Information Pamphlet (FLIP) Enroute, Instrument Flight Rules (IFR)--Visual Flight Rules (VFR) Supplements (see note 3)	Defense Mapping Agency AeroSpace Center St Louis AFS MO 63118
A2.12. Federal Acquisition Regulations (FAR) [see note 3]	(See AFIND 4)
A2.13. DoD Manual 4145.26, DoD Contractors Safety Manual for Ammunition, Explosives, and Related Dangerous Material (see note 3)	(See AFIND 4)
A2.14. Occupational Safety and Health Administration (OSHA) Standard 1910.109 (OSHA Safety and Health Standards/29 CFR 1910) [see note 3]	(See AFIND 17)
A2.15. Air Force Occupational Safety and Health (AFOSH) Standards [see note 3]	(See AFIND 17)
A2.16. National Fire Protection Association (NFPA) "National Fire Codes" (see note 1)	National Fire Protection Assn Batterymarch Park Quincy MA 02269

NOTES:

1. Available through base library.
2. Available through base master publications library.
3. Available through base publishing distribution office (PDO).
4. Some references are available through the internet.

Attachment 3

HOW TO COMPLETE AF FORM 2047, EXPLOSIVES FACILITY LICENSE

A3.1. Item 1. Self-explanatory.

A3.2. Item 2. Self-explanatory.

A3.3. Item 3. The installation weapons safety manager will assign this number that will consist of the last two digits of the calendar year and a serial number, assigned in numerical sequence. (For example, the first license issued in 1990 would be numbered 90-1, the second would be 90-2.)

A3.4. Section I:

A3.4.1. Item 4. Insert building number as shown on TAB C-1 of the base comprehensive plan. For an unnumbered facility, insert narrative description such as outdoor storage (intransit).

A3.4.2. Item 5. Insert, for example, alert hangar, small arms range, egress shop, security and administrative building, rod and gun club, or life support shop, as applicable.

A3.4.3. Item 6. Identify by number assigned.

A3.4.4. Item 7. Enter if item 8 is entered.

A3.4.5. Item 8. Enter if item 7 is entered.

A3.4.6. Item 9. Enter a brief description of facility.

A3.5. Section II:

A3.5.1. Column A. Insert class/division (DOT Class may be used when the facility is used exclusively for explosives in transportation cycle).

A3.5.2. Column B. Insert compatibility groups authorized by TO 11A-1-46 or AFJMAN 24-2-4, as applicable.

A3.5.3. Column C. Insert stocklist nomenclature for each specific type item authorized in the location and national stock number (NSN) or federal supply class and Department of Defense Identification Code (DODIC).

A3.5.4. Column D. Insert number of items authorized (both serviceable and unserviceable).

A3.5.5. Column E. Insert total explosives weight based on number of items authorized (class/division 1.4 items are excluded).

A3.5.6. Column F. Insert fire symbol and chemical hazard symbol as required.

A3.6. Section III. Commander of organization or functional manager requesting the license will be the certifying official.

A3.7. Section IV. The individual who is assigned installation weapons safety responsibilities completes and signs all copies.

A3.8. Remarks. The base fire chief will enter the specific type, quantity, and physical placement of fire extinguishers for the location. Also, when proper, conditions of approval, expiration date (if other than indefinite), reasons pertaining to disapproval, comments of requesting organization, technical manual references, etc., should be included.

A3.8. (PACAF) Licenses issued solely for exercise-use munitions, such as GBSs and smoke grenades, must state in the remarks section of the AF Form 2047 and in the applicable OI, *"FOR DURATION OF EXERCISE ONLY, Munitions will be returned to the munitions storage area within 3 calendar days of the end of each exercise"*. Licenses need not be rescinded at the end of each exercise. Annotate personnel limits in this section.

A3.9. Section V. Enter office symbols, dates, and names of coordinators. If privately owned ammunition is to be stored in locations outside the Continental United States (except Alaska, Hawaii, and Guam), obtain judge advocate coordination.

Attachment 4

HOW TO COMPLETE AF FORM 943, EXPLOSIVES SITE PLAN

A4.1. Form Purpose: Use this form to describe the quantity-distance relationships when siting a new PES or non-explosive ES (at less than IBD), updating a previous siting action or submission of explosive waivers and exemptions. (See Figure A4.1*, AF Form 943*). If additional space is needed to explain any information required on this form, use the transmittal letter (for example, a referenced action number, requested exception expiration dates, etc.).

A4.2. Section I--General Information.

A4.2.1. Action Number. Use a four part number as follows to identify the action.

A4.2.1.1. The requesting MAJCOM designation, followed by the tenant MAJCOM designation where needed to show the siting is for a tenant PES (host and tenant, such as: USAFE-AMC).

A4.2.1.2. The base or location where the action is located (for example, HILL, RAMSTEIN, LOGAN, etc.).

A4.2.1.3. Calendar year designation (99, 00, 01).

A4.2.1.4. An (S) identifier for the site plan request followed by a sequence number (1 through 999). Number each request sequentially for each calendar year. For example, the first site plan for the year would be S1. If more than one PES is included in the request, include an identifier for each (e.g., S4, S5, or S6). Canceled requests will not affect the numbering of subsequent requests. For example, if site plan USAFE-RAMSTEIN 99-S10 was canceled, the next siting submitted for Ramstein AB in 1999 would be 99-S11. If the siting involves Q-D exceptions, include the statement, "WITH EXCEPTIONS" immediately following the site plan identification number. Detail the exceptions in Section III.

A4.2.2. Base/Location. Location of the siting action. For example Hill AFB, UT. If other than a military base, list civilian or commercial address.

A4.3. Section II-- Site Data:

A4.3.1. Site Information. Use this section to describe the facility/operation being sited and Q-D relationships.

A4.3.1.1. Column 1. Identify the facility or location by its assigned CE number or other identifier (Bldg. 123 or F123).

A4.3.1.2. Column 2. First line: Describe, using the descriptions in **Table 3.3.** the type of facility or location being sited. For example: Earth-covered magazine, 7 Bar. State the facility/operation being sited has a barricade if it affects Q-D.

Second line: Identify the primary operation normally expected at the facility/operation. Example: shipping/receiving, maintenance/inspection or missile storage, bomb build-up, AFK, trailer maintenance, SCPS-2, etc. If facility type determines Q-D criteria applied, include definition of build-

ing such as Korean Tab Vee, 3rd Gen HAS, 26x60 igloo, 26x40 igloo, etc. Show definitive drawing numbers when available.

Third Line: Identify the MAJCOM and unit designation of the agency occupying the facility (e.g., USAFE-52FS).

Fourth Line: Show the total number of people (M for Military or DoD Civilian, C for Non-DoD Civilian and FN for Foreign Nationals) normally assigned to the location. Do not include casuals such as inspectors or quality control evaluators.

A4.3.1.3. Column 3. Show the proposed NEWQD for the new or updated PES, or the previously approved weights for existing sites being updated. List all hazard classes (*Exception:* HC/D 1.2.3, 1.5 and 1.6 may be omitted unless quantities are to be sited). If no explosives in a particular hazard class will be sited, type "None". The explosive authorization must always show the sited, waived, or exempted weights, whichever is greater. Type "None" for each HC/D for non-explosives sitings. For multiple room or bay facilities, show the NEWQD for each room or bay. For HC/D 1.1, 1.2.1, 1.2.2, 1.2.3, and 1.3 show a number; for HC/D 1.4 show "Capacity or op limit". The proposed NEWQD should reflect the mission need or physical capacity not necessarily what the distance will allow. Even though a facility may be sited for physical capacity, store only minimum essential quantities required for the current mission.

A4.3.1.4. Column 4. Show all class/divisions categories regardless if there will be an amount sited (*Exception:* HC/D 1.2.3, 1.5, and 1.6 may be omitted unless quantities are to be sited). List separately for each room or bay as applicable.

A4.4. PES/ES Information: Use this section to describe the most restrictive Q-D relationship between the proposed siting and other exposed sites (ES) or potential explosion sites (PES) for each Hazard Class/Division. As a minimum, when siting a PES show all exposures within IBD. In addition, when siting a non-explosive ES show all PESs which are within the evaluation zone (EZ) of the ES. When the EZ for a PES being sited exceeds that of the IBD, show only the PESs between the IBD and EZ. The evaluation zone (see glossary) is based on the Q-D type of the ES (e.g., Operating Location, Combat Aircraft Parking Area) and the applicable K Factor or minimum distances of HC/Ds in the PES (see **Figure 4.1.**). Use the largest amount of NEWQD or MCE as applicable for each HC/D authorized on the base to determine the size of the EZ.

A4.4.1. Columns 5 through 8. Same data elements as shown for columns 1 through 4. For exposures requiring only 50' min or no QD separation distance, use one line entry. If exceptions are involved, assign each exception a unique identification number using the format as described in paragraph **A4.2.1.** in column 6. This unique identification number will be based on the approval level. For example, use 388FW-Hill-99-W1 as the first wing level identification number for the calendar year 1999. Use ACC-Hill-99-W1 as the first MAJCOM level identification number, not W2. Subsequent site plan submissions with Q-D exceptions would use the next available exception number. For example, the next wing level exception identification action number would be 388FW-Hill-99-W2, not W1. This method will allow accurate tracking of exceptions based on the approval levels and calendar

year. Annotate the identification number preceding each ES or PES with exception. Use the identifiers (W) for waivers and (E) for exemptions. Include superseded waiver or exemption identification numbers if applicable. If either the facility/operation being sited or the ES has a barricade affecting Q-D, indicate this after the facility description in Column 6. Example: Above Ground Magazine (Barricaded).

A4.4.1. (PACAF) When documenting on and off-base exposures apply the risk-based nomograph to determine the approval level of the violation. In Korea, this guidance also applies to the exposures previously covered by the SECAF exemptions. Contact PACAF/SEW for additional guidance on applicability/amendments.

A4.4.2. Column 9. Show the actual distance from the facility listed in column 2 to facility listed in column 6. For exposures requiring only 50' min or no QD separation distance, use one line entry.

A4.4.3. Column 10. Show the *most restrictive* (greatest) separation distance, for each class/division, looking both ways required between columns 2 and 6. For exposures requiring only 50' min or no QD separation distance, use one line entry.

A4.4.4. Column 11. Enter the **Table 3.3.** Column/Line and note (if applicable) being used to obtain the distance in column 10. If there is a specific facility or situation that is not listed in **Table 3.3.**, use note 72.

A4.5. Section III - Exemption/Waiver Data. Complete this section if there are exceptions . See **Attachment 5** for an example of an additional cover letter that the MAJCOM must prepare for site plans containing exceptions.

A4.5.1. Item 1. Indicate the effect a maximum credible event at the PES would have on the unit mission, or other supported agencies. Describe the impact if the requested action is not approved. Carefully consider fragment and blast damage radii. supported agencies. Use **Table 4.2.** to estimate damage. The following are examples of expected loss: aircraft, moderate damage; 10 percent of aircraft maintenance facilities; 100 percent of POL facilities; and time periods related to recovery. Examples would be 100 percent for two days, 20 percent loss for an additional five days. Best estimates are acceptable.

A4.5.2. Item 2. Describe any corrective actions, compensatory precautions, and controls to achieve safety during operations if the request is approved. State whether corrective action can or cannot be done locally with available funds or other resources. If there is no planned construction or other corrective actions, explain why. Show planned or programmed (funded and unfunded) actions to eliminate exceptions . Such action might include recommendations to higher headquarters, assigning priorities, funding revisions to standard facilities, etc. If there are other local projects underway that involve funding, show the following: Construction priority assigned, Military Construction Program (MCP) item number and fiscal year for construction. Include any operational controls necessary.

A4.5.2. (PACAF) If compensatory measures are used to mitigate or eliminate violations, identify or attach locally approved written guidance.

A4.5.3. Item 3. Give the reason for the request. Describe the impact if the requested action is not approved.

A4.6. Section IV – Certification. Use if needed for exceptions, or if compensatory measures are used to avoid an exception . Modify the signature blocks or add an additional signature page to meet local needs

for routing or more signature blocks. The installation commander's signature shows that the request is needed for the mission. The approving authority certifies that the risks are acceptable for strategic or compelling reasons.

Figure A4.1. AF Form 943. *(NOTE: Document is shown representatively to illustrate use.)*

EXPLOSIVES SITE PLAN

SECTION I -- GENERAL INFORMATION

ACTION NUMBER	BASE/LOCATION	DATE
AFMC-ACC-Hill-99-S1 WITH EXCEPTIONS	Hill AFB, Utah	30 Jan 2001

SECTION II -- SITE DATA

SITE INFORMATION				PES/ES INFORMATION						
FAC NO. 1	FACILITY/OPERATION DESCRIPTION Owning Unit and No. Of People 2	SITED NEWQD 3	HC/D & MCE 4	FAC NO. 5	FACILITY/OPERATION DESCRIPTION Owning Unit and No. Of People Waiver/Exemption No.	SITED NEWQD 7	HC/D & MCE 8	DIST ACT 9	DIST REQ 10	SEP FACTOR Table 3.3 Col/Line/Note 11
999	Operating Location Bomb Build-Up Pad ACC -388FW – 10 M * Denotes the authorized IB parenthetical hazardous fragment distance and the largest single round NEWQD for Unit Risk HC/D 1.2.3 items permitted at this location.	60,000 145,526 100,000 5,000 5,000 Op Limit	1.1 1.2.1>450 1.2.2 *(14)≤450 1.3 1.4	930	Storage Magazine- AboveGround - Barricaded Bomb component storage ACC-388 MXS	6,446 3,751 500,000 70,000 70,000 Capacity	1.1 1.2.1≤202 1.2.2 *(09)≤450 1.3 1.4	335’	335’ 335’ 282’ 324’ 185’ 50’	6/8 16-17/8(77) 18/8 19/8 20/8 (58) 21/8
				Ogden Street	Public Traffic Route On-base road - Medium traffic density AFMC-375 ABW	None None None None None None	1.1 1.2.1 1.2.2 1.2.3 1.3 1.4	950’	940’ 891’ 386’ 840’ 115’ 100’	8/25 (9) 1617/25(77) 18/25 19/25 20/25(59) 21/25
				938	Operating Location 20MM/Flare/Chaff Processing ACC-388 MXS 6M	None None 10,000 5,000 5,000 Op Limit	1.1 1.2.1 1.2.2 *(03)≤450 1.3 1.4	750’	705’ 535’ 232’ 504’ 75’ 50’	8/8 16-17/8(77) 18/8 19/8 20/8 (58) 21/8
				938-A	Paint Locker ACC-388MXS	None	None	800’	50’	8/27 (36)
				950	Earth-Covered Igloo 7 Bar Dwg # 421-80-06 Side Exposure ACC-388MXS	30,000 28,118 500,000 500,000 500,000 Capacity	1.1 1.2.1>450 1.2.2 *(12)≤450 1.3 1.4	990’	498’ 50’ 50’ 50’ 400’ 100’	1/8 (61) 16/8 (57) 18/8 (57) 19/8 (57) 20/8 (58) 21/8
				5000	***388FW-Hill-99-W1*** Public Traffic Route POV Parking (Admin) ACC-388 FW **ACC-Hill-99-W1**	None None None None None None	1.1 1.2.1 1.2.2 1.2.3 1.3 1.4	920’	940’ 891’ 362’ 840’ 115’ 100’	8/25 16-7/25(77) 18/25 19/25 20/25 (59) 21/25
				5001	Inhabited Building Military Personnel Flight(MPF) ACC-388 FW 35M Defensive Fighting Position	None None None None None None	1.1 1.2.1 1.2.2 1.2.3 1.3 1.4	1000’	1566’ 1485’ 643’ 1400’ 115’ 100’	8/28 16-17 (77) 18/28 19/28 20/28 (59) 21/28
				9000	ACC-388SPS 2M	None	None	25’	0’	8/27 (36)

AF FORM 943, JAN 01 PAGE 1 OF 1 PAGE

FOR OFFICIAL USE ONLY
(Unclassified Sample)

Section III - EXEMPTION/WAIVER DATA

1. IMPACT ON MISSION IF MISHAP OCCURS

388FW-Hill-99-W1: The MPF POV parking lot requires K24 separation, but is located at K23.5 from facility 999. A maximum credible event at 9999 would not have any adverse affect on mission accomplishment since it is a POV parking lot. Some injuries/deaths may occur to personnel transiting the parking lot from flying debris and fragments. Based on the nomograph, the approval level for this exception is the NAF/CC (delegated to the wing commander). **388FW-Hill-99-W2:** The MPF requires K40 separation, but is located at K25.5 from facility 999. Facility 1255 would receive significant structural damage from blast effects approximating 20% of the replacement cost. Moderate fragment damage is expected, depending largely upon the munitions involved and its fragmentation characteristic. Personnel in the open are not expected to receive serious injuries; however some injury is expected due to fragments. Personnel in the facility may suffer serious injuries from secondary effects, such as building debris and glass breakage. Impact on the MPF's mission capability would be interrupted for approximately one month. Based on the nomograph, the approval level for this exception is the MAJCOM/CC.

2. ACTIONS TAKEN TO MINIMIZE RISK (Unusual controls, precautions, etc.) AND PROGRAMMING CONSTRUCTION ACTIONS TAKEN TO CORRECT EXCEPTIONS, RECOMMENDED ACTION FOR HIGHER HEADQUARTERS

Munitions activities will be limited to nightly operations to the maximum extent possible limiting the length of time the MPF is exposed to the potential explosion site. The amount of munitions present on the bomb build-up pad will be limited to an operational necessity and this pad will not be utilized as a storage or holding area for munitions. Munitions supervisory personnel will ensure all personnel are certified for munitions operations conducted on the pad. Safety personnel will conduct spot inspections during bomb build-up operations. Glass windows in the MPF facing the pad will have a protective film applied to minimize hazards from flying glass shards. A new MPF facility and parking lot is programmed for FY 2001, (project #01-97-007). The new facility's location is outside of any explosives clear zone and will eliminate the two quantity-distance exceptions.

3. JUSTIFICATION OR IMPACT ON MISSION IF SITE PLAN IS NOT APPROVED

New mission requirements of the 388FW predicate continuous munitions support. The proposed bomb build-up pad request and the two associated quantity-distance exceptions present the best alternative considering available land, operational requirements, and practical safety applications. There is currently no other facility space available to utilize in the interim.. The requested net explosives weights are the minimum needed to meet the new mission requirements. Relocating the MPF and its associated POV parking lot before utilizing the bomb build-up pad was not feasible due to the immediate implementation of the tasking for munitions support and the timelines needed for budgeting and relocating the MPF and parking lot. Disapproval of this request will adversely affect the 388FW's mission readiness.

SECTION IV - CERTIFICATION

COMMANDER CONCURRENCE			
TENANT UNIT (When Applicable)			
☐ Concur	☐ Non-Concur	**PRINTED OR TYPED NAME**	**SIGNATURE**
INSTALLATION/WING			
☐ Concur	☐ Non-Concur	**PRINTED OR TYPED NAME**	**SIGNATURE**
INTERMEDIATE COMMAND/STATE ADJUTANT GENERAL (ANG only)			
☐ Concur	☐ Non-Concur	**PRINTED OR TYPED NAME**	**SIGNATURE**
MAJOR COMMAND			
☐ Concur	☐ Non-Concur	**PRINTED OR TYPED NAME**	**SIGNATURE**

AF FORM 943, JAN 01 (REVERSE) **FOR OFFICIAL USE ONLY**
(Unclassified Sample)

Attachment 5

SAMPLE EXPLOSIVES SITE PLAN TRANSMITTAL LETTER AND MAP

30 Nov 01

MEMORANDUM FOR AFMC/SEW
FROM: OO-ALC/SEW
7290 8th Street

Hill AFB, UT 85056-5003

SUBJECT: ***Preliminary*** Explosive Site Plan (ESP) Submission - AFMC-Hill AFB-98-S5 - Cartridge Actuated Devices (CAD) and Propellant Actuated Devices (PAD) Storage Magazine

1. Request routine processing and preliminary approval of subject ESP for the purpose of siting an above-ground magazine to store cartridge actuated devices (CAD) and propellant actuated devices (PAD). ESP approval will enable the Ogden Air Logistics Center to more efficiently support daily and contingency mission requirements by consolidating CAD/PAD items closer to the shipping activity.

2. ESP package is submitted for processing in accordance with AFMAN 91-201, ***Explosive Safety Standards,*** dated 1 Jan 98. All explosive safety criteria will be met. It does not expose assigned tenant units. There are no compensatory actions associated with this ESP.

3. This package contains a general location map, 1” = 400’ PES/ES Map, specific location map, an AF Form 943 ***EXPLOSIVE SITE PLAN/WAIVER/ EXEMPTION*** showing Potential Explosion Site(s) (PESs) and Exposed Site(s) (ESs) relationships, a line drawing of the proposed facility and base master plan reconciliation minutes. Maps are computer generated and verified by the base civil engineer. Design drawings and appropriate analysis will be provided when the final ESP is submitted.

4. The AF Form 943 is annotated in Column 11 to show the most restrictive relationship between the PES and the ES. This annotation is as follows: > Shows that the Q-D separation from the PES to the ES is the more restrictive for the HC/D indicated. < Shows that the Q-D separation from the ES to the PES is the more restrictive for the HC/D indicated. = Shows that the same separation is required in both directions for the HC/D indicated.

5. The following information is provided to assist in the ESP review.

a. The explosive authorizations will be 200,000 HC/D 1.3 and unlimited HC/D 1.4.

b. The storage magazine was evaluated as a PES and as an ES. Evaluating all exposures within inhabited building distance (IBD) is adequate to insure compliance with quantity-distance (Q-D) criteria. However, when an evaluation zone exceeds the IBD clear zone, PESs in the evaluation zone must also be evaluated. An evaluation zone is that area which exceeds the IBD clear zone when the PES being sited is evaluated as an ES. In the case of this PES, the IBD is 375' based on 200,000 pounds of HC/D 1.3. As an ES, this building is an aboveground magazine requiring K-11 distance from other PESs. The evaluation zone is the distance between 375' and 875'. 875' is based on 500,000 pounds of HC/D 1.1 at K-11. 500,000 pounds was used because there are PESs at Hill AFB sited for 500,000 of HC/D 1.1.

c. The magazine, identified as Building 1361, will be located in the main munitions storage area of Hill AFB (see **Attachment 1**). Specific location siting distances are shown on **Attachment 3**. The proposed magazine floor plan is shown on **Attachment 5**.

d. It will be used to store only Hazard Class/Division 1.3 and 1.4 CAD/PAD items and some inert associated components. Operations, beyond normal storage functions, will be limited to opening outer containers for removal of inner containers. Additional processing of these items will be completed in an approved operating location.

e. The magazine will be new construction. The project Identification and Programming, Design and Construction number is KRSM 933002.

f. Two structures, 1367 and 1319, are shown within the clear zone of the new magazine. These structures can meet quantity distance requirements only if used to provide direct support to the new storage magazine. As they are not needed for direct support, they will be scheduled for demolition or not authorized for use. Documentation of this will be provided in the final ESP submittal. Although these two structures are shown on the map they are not shown on the AF Form 943.

g. A lightning protection system will be installed.

h. There will be 2 rows of 6 automated storage bins.

i. The clear zone was evaluated for utilities. There are no utilities requiring Q-D separation in the clear zone. Those utilities in the clear zone serve only the explosives area.

j. Electro-Magnetic Radiation (EMR) hazards were evaluated. Ammunition containing Electro-Explosive Devices will be in their proper shipping containers. Our analysis shows no EMR hazards to the area being sited.

6. The proposed siting has been reconciled with the base master plan using a current land survey. No off-base Civilian Property/Base Boundary/Easements are violated. See **Attachment 6**.

7. Implementation of this site plan will not adversely affect operations currently conducted in the area. Personnel and explosive limits will be controlled by operating instructions and held to a minimum commensurate with safe and efficient operations. ESPs are maintained by OO-ALC Weapons Safety office for oversight and copies are provided to the user to ensure compliance.

8. Direct questions to George Stratman, DSN 777-1425 or E-Mail: **mailto:stratmag@hillwpos.hill.af .mil**.

RAY W. TIDWELL
Chief of Weapons Safety

Attachments:
1. General ESP Location Map
2. 1” = 400’ PES/ES Map
3. AF Form 943
4. Specific Location Map
5. Floor Plan Drawing
6. Base Comprehensive Plan Reconciliation Minutes

SAMPLE 1" = 400' PES/ES MAP

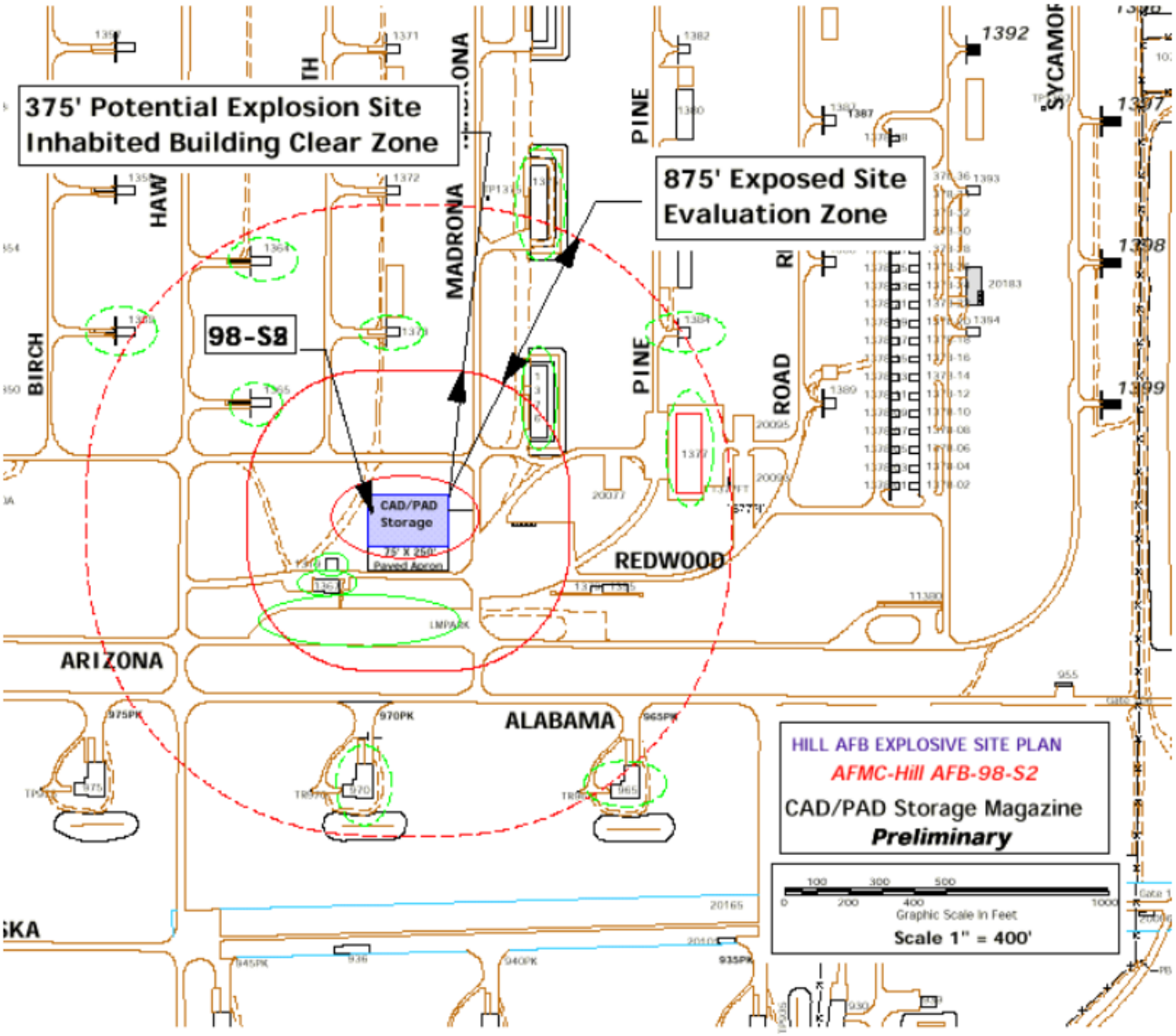

Attachment 6

SAMPLE NARRATIVE FOR AIR FORCE QUANTITY-DISTANCE EXEMPTION REQUEST

AFMC-ACC-Hill AFB-97-W1

********** The following paragraphs are <u>mandatory</u> for all exemption/waiver submissions. *********

<u>STANDARD(S) NOT MET</u>. List specific exception(s) to Q-D Standards

<u>JUSTIFICATION</u>. State the strategic or compelling reason(s) for the exemption/waiver. If explosives safety standards were one of several factors in considering this project, discuss those factors which were judged to outweigh safety and drive this exception.

<u>ALTERNATIVE(S).</u> List option(s) which could prevent the exception. For each alternative, provide rationale that precludes implementation.

<u>CONTROL MEASURES</u>.

<u>Compensatory Measures</u>. Fully discuss all measures implemented to mitigate the adverse effects of and decrease the probability of an accidental explosion. Provide the title and number of the specific plan, OI, etc. which directs compensatory measures.

<u>Elimination</u>. Fully discuss planned investment strategy and other actions to eliminate the exception. Include sources of funding.

Attachment 7

SELECTED SECRETARY OF THE AIR FORCE EXEMPTIONS

(Some offices and symbols have changed)

SEP 18 1986

OFFICE OF THE SECRETARY

MEMORANDUM FOR AF/IG

SUBJECT: Exemption of Explosives Safety Quantity-Distance (Q-D) Criteria for USAF Explosives Locations in the Republic of Korea (ROK) - INFORMATION MEMORANDUM

The United States Air Force has a requirement to maintain sufficient supplies of ammunition and explosives within the ROK to support wartime and contingency operational plans. Wherever and whenever possible, these munitions are stored to comply with explosives Q-D requirements. However, due to the limited real estate available and encroachment of the Korean civilian population into the explosives clear zones, there are a large number of off-installation exposures. The Air Force must work closely with the ROK authorities and support their efforts, however, control of off-installation clear zones is a ROK responsibility.

As requested by CINCPACAF (*now PACAF/CC)* in his letter of 7 April 1986 to HQ Air Force Inspection and Safety Center (AFISC) *(now AFSC)*, I am granting a permanent Korean-wide exemption of off-base exposures associated with USAF controlled munitions. My decision is based on the fact that (a) the quantities of munitions being stored are required to support war-fighting capabilities, (b) no other suitable locations that meet Q-D requirements are available, and (c) the encroachment into off-installation clear zones is beyond the control of the USAF. This exemption applies for all violations within the off-base clear zones identified on the maps that accompany the PACAF exemption request (**Attachment 1**). Exemption is granted for construction of new facilities which are properly sited, provided the clear zones required do not exceed the currently exempted off-base clear zones. Any construction that exceeds the current off-base clear zones must be approved by HQ PACAF and submitted to this office for an amendment to this exemption.

In order to ensure the greatest degree of safety, the following conditions are imposed: (a) Operations will be conducted by qualified personnel following approved procedures; (b) the degree of hazard will be reduced by strict adherence to safety and maintenance standards and procedures; (c) annual inspections will be made to assure explosives limits defined by the identified clear zones have not been exceeded; (d) munitions will be stored to reduce the hazards to the minimum degree possible consistent with operational requirements; and (e) permanent copies of this memorandum and the base maps showing established clear zones will be maintained at AFSC, HQ PACAF and the individual bases affected.

I want to reemphasize that this exemption must in no way reduce the Air Force effort to resolve the violations that exist. In applying this exemption, PACAF will at all times ensure adherence to the obligation of the United States under Article III, paragraph 3 of the SOFA to have due regard for the public safety in Korea. PACAF will continue to ensure that the ROK is aware of the required clear zones and of the potential hazards that exist. PACAF must continue also to work with ROK authorities to identify and obtain additional real estate and to remove people from the hazard areas. As stated in the exemption request, the exemption will be reviewed every five years and a copy of this exemption translated into Korean will be provided to the ROK Ministry of National Defense.

< signed >
E.C. Aldridge, Jr.
Secretary of the Air Force

SECRETARY OF THE AIR FORCE
WASHINGTON, D.C.

MEMORANDUM FOR SAF/IG JUN 29 1989

SUBJECT: Exemption of Explosives Safety Quantity-Distance (Q-D) Criteria for MAGNUM Locations in the Republic of Korea (ROK) - INFORMATION MEMORANDUM

The United States Air Force has a continuing requirement to maintain adequate supplies of ammunition and explosives within the ROK to support wartime and contingency operational plans. Since capabilities are limited on USAF-controlled installations, the US obtained additional storage capabilities through a concept known as MAGNUM (Munitions Storage Activities Gained by Negotiations of USAF/ROKAF Memorandum). MAGNUMs are a concept unique to Korea, where USAF-titled munitions are stored at facilities which are owned, operated, and protected by the ROKAF. Accordingly, the USAF has very little control over the storage of munitions within these areas and no authority to enforce the maintenance of Q-D clear zones. As a result of encroachment by the Korean civilians into the explosive clear zones, there are large numbers of exposures around the MAGNUMs.

As requested by CINCPACAF (*now PACAF/CC)* in his letter of 7 July 1986, to HQ Air Force Inspection and Safety Center (AFISC) *(now AFSC)*, I am granting a permanent exemption from US DOD Q-D standards for off-installation and ROK exposures created by storage of USAF munitions at MAGNUM locations. My decision is based on (1) operational requirements that preclude significant reduction of storage capabilities without significantly impacting war-fighting capabilities, (2) the absence of other suitable locations that meet Q-D requirements, and (3) the clear zone encroachment by Korean civilians that is beyond the control of the USAF. This exemption applies for all off-installation and ROK violations created by the originally sited net explosives weight (NEW) of storage structures located at the Osan, Kunsan, Suwon, Kwang Ju, Sachon, Taegu, and Cheong Ju MAGNUMs. Exemption is also granted for construction of new facilities at these sites, provided there are no intermagazine violations, no new exposures to US personnel and the clear zones required do not exceed the current off-installation clear zones. Any construction that exceeds the current off-installation clear zones must be approved by PACAF and submitted to this office for amendment to this exemption.

In order to ensure the greatest degree of safety, the following requirements are imposed: (1) intermagazine violations are not allowed; this will prevent simultaneous detonation, thus keeping clear zones to a minimum and assuring survival of munitions in the event of an accident; (2) within the inherent constraints of MAGNUM operations, USAF personnel will monitor ROKAF activities to ensure safety and maintenance standards and procedures are followed; (3) authorized NEW will be maintained and monitored by HQ PACAF safety and munitions personnel; and (4) permanent copies of this memorandum will be maintained at AFSC, HQ PACAF, and the host USAF installation providing support for the individual MAGNUM site.

This exemption must in no way reduce the USAF effort to resolve the violations that exist. In applying this exemption, PACAF will at all times ensure adherence to the obligation of the United States under Article III, paragraph 3, of the SOFA to have due regard for the public safety in the ROK. PACAF will continue to ensure that the ROK is aware of the required clear zones and of the potential hazards created by storage of explosives too close to civilian populations. PACAF must continue also to work with ROK authorities to correct these exposures wherever possible through such actions as obtaining additional real estate and removing people from hazard areas. This exemption will be reviewed every 5 years and a copy, translated into Korean, will be provided to the ROK Ministry of National Defense.

< SIGNED >

Donald B. Rice
Secretary of the Air Force

1 Attachment
Exemption Request

MEMORANDUM FOR: HQ PACAF/CV 29 MAR 1995

FROM: HQ USAF/SE
9700 G Ave SE, Suite 240
Kirtland AFB, NM 87117-5670

SUBJECT: Implementation Policy for SECAF Exemption for Korean MAGNUMs

I understand that confusion may exist over the intent of subject exemption. I have looked carefully at the entire package submitted to the SECAF to try to ascertain his mind-set. Two points were clear; 1) both the PACAF/CC and the SECAF noted that we have absolutely no control over off-base, and very little control over on-base, exposures; and 2) at the time of the request, there were already approved exemptions for on-base exposures at the MAGNUMs. Based on the above, the following guidance is provided:

a. All exposures to ROK facilities, both on- and off- site, are exempted. This recognizes the very real fact that we have absolutely no control over what they do on, or off, their bases.

b. All new construction or change in use of facilities requires the submission of a site plan to ensure no inter-magazine violations or exposure of US personnel and that the clear zone does not extend off-base beyond the originally sited clear zone.

c. Encroachment of US personnel/facilities is not permitted, either inside or outside of the MAGNUMs.

The exemption clearly stipulates that clear zone arcs cannot exceed those that existed at the time the exemption was signed or the exemption must be modified. Although this exemption preserves our storage capability, it does not relieve the USAF from diligently working with the ROKAF to remediate existing and prevent future violations. The last paragraph of the exemption is clear on this point.

< Signed >
ORIN L. GODSEY, Brig Gen, USAF
Commander

SECRETARY OF THE AIR FORCE

WASHINGTON, D.C.

Jul 1 1994

MEMORANDUM FOR DEPUTY UNDER SECRETARY (ENVIRONMENTAL SECURITY) OFFICE OF THE UNDER SECRETARY OF DEFENSE (ACQUISITION)

SUBJECT: Explosives Quantity-Distance (Q-D) Exemption for Siting Ports and Railheads used by US Air Forces Overseas

Pursuant to the requirements of DoD Directive 6055.9, Chapter 1, Paragraph C, please advise the DOD Explosives Safety Board (DDESB) that this memorandum exempts the US Air Force from the siting and Q-D requirements of DoD 6055.9-STD and AFMAN 91-201 for overseas ports and railheads used for the transshipments of munitions and explosives. This exemption is necessary to satisfy operational requirements.

We must continue to conduct operations abroad which require munitions at host nation ports and railheads as they are the only shipping points available. In all cases, the host nation directs which of their ports and railheads will be used for each shipment. Since we must comply with host nation regulations and restrictions, US site planning efforts are not always enforceable. In order to provide the safest possible conditions, we will continue to ship the minimum amount of munitions necessary to meet operational requirements. Under this exemption, MAJCOM Commanders must ensure the following procedures are used:

a. Operations conducted at host nation locations which have or use existing explosives safety criteria will be conducted in accordance with that criteria. MAJCOM's will forward host nation documentation [such as net explosive weight (NEW) limits, requirements, maps (if possible), and pertinent operational restrictions] to HQ AFSC/SE for review and forwarding to the DDESB for each port or railhead used. This exemption will provide acceptance of Q-D violations of US criteria which may exist at these locations.

b. Operations conducted at host nation locations which do not have or use explosives safety criteria will be conducted in accordance with DoD 6055.9-STD and Air Force regulations, where feasible. At those locations where US criteria cannot be met, a risk assessment will be prepared and forwarded to the MAJCOM commander for approval. US contracted commercial carriers will comply with appropriate NEW limits/restrictions established. This exemption will provide acceptance of the Q-D violations which may exist at these locations.

As a long term and more viable solution, I strongly recommend the DDESB provide instructions to the Services on how to evaluate and safely handle explosives shipments in foreign ports and railroads considering mission constraints and the potential hazards posed by the explosives. This exemption will remain in effect until no longer necessary and will be reviewed every five years for currency and applicability in accordance with AFMAN 91-201.

< Signed >

Sheila E. Widnall

Attachment 8

MUNITIONS APPROVED FOR STORAGE IN FLIGHTLINE ARMCO REVETMENTS

18 April 97

DDESB-KT

MEMORANDUM FOR DDESB MEMBERS AND ALTERNATES

SUBJECT: Munitions Suitable for Storage in ARMCO Revetments for Flight Line Operations

REFERENCES: (a) Minutes of 314 DDESB Board Meeting, Attachment F (4 Feb 1997)

(b) Letter, Michael Swisdak (NSWC) to Ray Sawyer (DDESB-KT), "Proposed ARMCO Revetment List," (17 Mar 1997)

Criteria were approved during the 314th DDESB Meeting Reference (a) for siting of munitions in ARMCO revetments during flight line, "load and unload operations." The DDESB Secretariat received an action item from the Board to develop and maintain a list of munitions suitable for storage in ARMCO revetments. Personnel from the Air Force and the Army prepared Reference (b) to support the assigned action. Reference (b) contains both a current listing of munitions suitable for use with an ARMCO revetment and a proposed methodology for adding other munitions to the list in the future.

At present, only those munitions common to the Air Force for flight line operations are listed. Operations in which the ARMCO Revetments would find applications for the other Services have not decided. However, if operations other than those on a flight line are approved, a methodology for screening new munitions will permit new munitions, common to all Services to be added in the future.

Attachment A contains the present listing of approved munitions while Attachment B contains the munitions screening procedure.

My POC for this action is Dr. Chester E. Canada (PH: 703-325-1369; FAX 703-325-6227; E-Mail **mailto:canadac@ix.netcom.com**).

<SIGNED>
W. Richard Wright
Colonel, USA
Chairman

MUNITIONS APPROVED FOR STORAGE IN ARMCO REVETMENTS DURING FLIGHT LINE OPERATIONS (16 April 1997)

HAZARD DIVISION	NOMENCLATURE	IDENTIFIER	REFERENCE
1.6	Any Item		1,2
1.4*	Any Item		1,2
1.3*	Any Item		1,2
1.2 (unit risk)	Any Item		1,2
1.2*	Any Item		1,2
1.1	Bomb, General Purpose	MK-81	3,4,5
	Bomb, General Purpose	MK-82	3,4,5
	Bomb, General Purpose	MK-83	3,4,5
	Bomb, General Purpose	MK-84	3,4,5
	Bomb, General Purpose	M-117	3,4,5
	Bomb, General Purpose	M-118	3,4,5
	Bomb, General Purpose	T56	3,4,5
	Bomb, General Purpose	BLU-31	3,4,5
	Bomb	BLU-82	6
	Bomb	BLU-109	6
	Guided Bomb	BLU-110	6
	Guided Bomb	BLU-119	6
	Bomb	BLU-113	6
	Bomb, Fragmentation	AN-M4lAl	3,4,5
	Bomb, Semi Armor Piercing	AN-M59Al	3,4,5
	Dispenser and Bomb	MK-20	10
	Dispenser and Bomb	CBU-38	10
	Dispenser and Bomb	CBU-58	10
	Dispenser and Bomb	CBU-71	10
	Dispenser and Bomb	CBU-87	10
	Dispenser and Bomb	CBU-89	10
	Guided Missile	AGM-45 (SHRIKE)	9
	Guided Missile	AGM-65 (MAVERICK)	6
	Guided Missile	AGM-84 (HARPOON)	6
	Guided Missile	AGM-86 (ALCM)	6
	Guided Missile	AGM-109 (TOMAHAWK)	6
	Guided Missile	AGM-119 (PENGUIN)	6
	Guided Missile	AGM-122 (SIDEARM)	9
	Guided Missile	AGM-123 (SKIPPER)	6
	Guided Missile	AGM-142 (HAVE NAP/POPEY)	6
	Guided Missile	AIM-7 (SPARROW)	7,8
	Guided Missile	AIM-9 (SIDEWINDER)	9
	Guided Missile	AIM-54 (PHOENIX)	9
	Torpedo	MK-48	7,8
	Torpedo	MK-48 ADCAP	7,8
	Torpedo	MK-48 ADCAP	7,8
	Torpedo	MK-46	7,8
	Projectile	M-107, 155 mm, HE	6
	Projectile	M-106, 8 inch. HE	6
1.1/1.2	Guided Missile	AGM-88	9
	Guided Missile	AIM-120	9
	Projectile	M-105 mm, HE	6

*Hazard Classification depends on packaging configuration.

REFERENCES

MUNITIONS APPROVED FOR STORAGE IN ARMCO REVETMENTS
DURING FLIGHT LINE OPERATIONS
(16 April 1997)

1. DoD 6055.9-STD, DoD Ammunition and Explosives Safety Standards, Oct 1992, latest version.

2. Minutes of 314th Board Meeting, Attachment F, 4 Feb 1997.

3. Peterson, F. H., "High Explosive Test (Big Papa)" AFWL-TR-67-132, May 1968.

4. McGuire, R. C., "Safe Parking Distances For Heavy Bomber Aircraft In Revetments (Project BIG MOMMA), "AFATL-TR-66-102,1966.

5. Jorgensen, J.M., "Aircraft Shelter Explosives Quantity-Distances Evaluation Concrete Sky Phase IXB, AFWL-TR-71-65, July 1971.

6. Analysis by M. Swisdak, based on definition of robust/non robust munitions and analogy with references 3,4,5.

7. Reeves, H., "Magazine Crush Tests Results for Thin-Skinned Ordnance Items" EMTC Report 0-FR-94-34, Energetic Materials Research and Testing Center, New Mexico Tech, Socorro, New Mexico.

8. Hager, K., Tancreto, J.E., and Swisdak, M., "Analysis of ARMCO Revetments to Prevent Sympathetic Detonation of Thin Case Munitions" NFESC TR-2059-SHR, May 1996.

9. Tancreto, J.E., Swisdak, M., and Malvar, J., "High Performance Magazine Acceptor Threshold Criteria," Minutes of the 26th DoD Explosives Safety Seminar, 16-18 Aug 1994.

10. Analysis by M. Swisdak and analogy with CBU-7, CBU-12, CBU-14, CBU-22, CBU-24, CBU -46, CBU-49, CBU-52, and CBU-58.

11. Definition of Robust Munitions from DoD 6055.9-STD: These are munitions having a ratio of the explosive weight to the empty case weight less than 1.00 and a nominal wall thickness of 0.4 inches. Examples of robust ammunition include MK 80 series bombs M107 projectiles, Tomahawk and Harpoon penetration warheads and 20, 25, and 30 mm cartridges. Examples of non-robust ammunition include CBUs, torpedo warheads, underwater mines and TOW, HELLFIRE, Sparrow, and Sidewinder missiles. Unless otherwise noted, all air-to-air missile warheads are defined as non-robust.

PROCEDURE FOR PLACING AN ITEM ON THE ARMCO
REVETMENT APPROVED MUNITIONS LIST
FOR FLIGHT LINE OPERATIONS

The typical procedure for adding munitions to the ARMCO Revetment, Approved Munitions List for flight line operations is outlined below.

Submit an approval request with the following information to the Chairman, DDESB:

-Configuration drawings showing case and explosives materials dimensions

-General information about the explosives fill (materials; weights; sensitivities); the casing (materials; weights; nominal dimensions; etc.); and the all-up item (nomenclature, sensitivity test data, etc.

-Hazard classification test data for single package, stack, and external fire tests

-Information about other items that are pertinent to the item in question

Addition of an item to the Approved List is warranted if either of the following is true:

-The item under consideration is considered equivalent to one already on the list; or

-Analyses, conducted IAW Reference (1), indicate that the item will not promptly detonate; or

-Experimental results, taken IAW Reference (2), indicate that the item will not promptly detonate

References:

1. Hager, K., Tancreto, J.E., and Swisdak, M., “Analysis of ARMCO Revetments to Prevent Sympathetic Detonation of Thin Case Munitions," N-FESC TR-2059-SHR (May 1996)

2. Tancreto, J., Swisdak, M., and Malvar, J., "High Performance Magazine Acceptor Threshold Criteria," Minutes of the 26th DoD Explosives Safety Seminar (16-18 Aug 1994)

Attachment 9

SUBJECT INDEX

SUBJECT INDEX **Paragraph**

Aeroclub Aircraft T3.3, N79
Air Transport Of Explosive ..... **2.77.**
Aircraft Battle Damage Repair Sites ..... **3.26.**
Aircraft Criteria ..... **3.35.**
Aircraft, Grounding ..... **2.57.**
Alarms, Fire ..... **2.20.**
Angled Storage ..... **3.37.**
Angled Storage Of Munitions In Has ..... **3.37.**
Approval Levels For Specific Explosives Site Plans ..... **4.8.**
Approved Equipment, Electrical ..... **4.40.**
Austere Areas ..... **3.21.**
Automatic Sprinkler Systems ..... **4.44.**
Barricade Value ..... **3.12.9.**
Barricades ..... **3.12.**
Barricades Typical, Stack Relationship ..... **Figure 3.2.**
Barricades, Artificial ..... **3.12.4.**
Barricades, Inspection ..... **3.12.6.**
Barricades, Magazines As ..... **3.12.8.**
Barricades, Natural ..... **3.12.3.**
Barricades, Siting ..... **3.12.7.**
Base Defense Support Munitions For Dispersed Locations ..... **2.38.**
Battery-Powered Materials Handling Equipment ..... **2.72.**
Blast Doors ..... **4.21.**
Blast Effects ..... **Table 4.2.**
Blast Pressure ..... **4.48.**
Bracing Guidance ..... **2.76.9.**
Buffered Storage Concept ..... **3.36.**

Building Exits ..... 4.22.
Burns Planned ..... 3.27.
Car Seals, Changing ..... 2.76.13.
Cargo Aircraft Separations ..... 3.13.4.
Changing Car Seals ..... 2.76.13.
Chemical Hazard Symbols ..... 2.25.2.
Chemical Symbol, Dimensions ..... 2.25.4.
Chemical, Exceptions To Posting ..... 2.25.8.
Chemical, Obtaining ..... 2.25.5.
Chemical, Posting ..... 2.25.7.
Choosing And Installing Hardware ..... 4.33.
Classification Yards ..... 2.76.17.
Clear Zones ..... 4.15.
Collection Of Explosives Dusts ..... 4.42.
Compatibility Groups ..... 2.42.4.
Compatibility Of Ammunition And Explosive Items ..... 2.42.
Compatibility Of Explosives During Transportation ..... 2.64.
Compatibility, Exceptions ..... 2.44.
Compatibility, Mixed Storage ..... 2.43.
Compatibility, Storage ..... Table 2.4.
Concurrent Operations ..... 3.3.
Control Of Vegetation Along Railroad Right-of-Way ..... 2.76.7.
Control Tower ..... 2.37.1.
Controlled Burning, Separation Criteria For ..... 2.21.4.
Damaged Containers And Unpackaged Items ..... 2.30.
Damaged Or Fail To Function Explosives, Shipment Of ..... 2.66.
Dangerously Unserviceable Explosives Items ..... 2.31.
Defensive Missile Battery Separation ..... 3.13.5.
Deluge Systems ..... 4.45.
Determination Of Quantity-Distance ..... 3.11.
Determining Explosives Content Of A PES ..... 3.8.
Detonation Planned ..... 3.27.

Developing Written Procedures ..... 2.4.
Direct Combat Aircraft Generation Related Facilities ..... 3.13.3.
Directional Firing Munitions ..... 3.25.1.
Disposal Ranges ..... 3.27.
Disposal, Demonstrations, And EOD Operations Using Burning ..... 3.27.2.
Disposal, Demonstrations, And EOD Operations Using Detonation ..... 3.27.1.
Distance, Measuring ..... 3.10.
Dividing Walls ..... 2.40.
Dot Explosive Placards ..... 2.25.6.
Drains And Sumps ..... 4.32.
Egress Systems Maintenance Shops ..... 2.37.4.
Electrical Equipment ..... 4.40.
Electrical Hazards ..... 2.45.
Electrical Service ..... 2.48.
Electrical Storms, Procedures In Event Of ..... 2.56.
Electrical Testing Of Explosive Items ..... 2.55.
Electrical Utilities ..... 3.19.
Electroexplosive Devices ..... 2.71.1.
Electromagnetic Radiation, Hazard To Electroexplosive Devices ..... 2.58.
Emergency Exits And Fire Escapes ..... 4.25.
Emergency Personnel, On-Scene Guidance ..... 2.25.
Emergency Withdrawal Distances ..... 2.24.
Emergency Withdrawal Distances ..... Table 2.1.
Emergency Withdrawal Distances For Essential Personnel ..... 2.24.1.
Emergency Withdrawal Distances For Nonessential Personnel ..... 2.24.2.
End Of Runway/ Dearm Crew Shelter ..... Table 3.3. (66).
EOD Disposal Range ..... 3.28.
EOD Tool Kits At Off-Range Locations ..... 3.28.3.
EOD Tool Kit Use ..... 3.28.3.
Evaluation Zones ..... 4.11.5.6.
Exceptions To Compatibility ..... 2.44.
Exceptions To Posting Fire Symbols ..... 2.25.8.

Exceptions To Q-D ..... 3.29.5.
Exceptions To Fire Symbols ..... 2.25.8.
Exceptions To Siting A Potential Explosive Sites(PES)..... 4.5.1.
Exceptions, General ..... 5.1.
Exit Doors ..... 4.23.
Explosive Dust Collection ..... 4.42.
Explosive Limits., Posting ..... 2.5.2.
Explosive Ordnance Disposal (EOD) Training ..... 3.28.
Explosive Safety Requirements - General Information ..... 2.1.
Explosives Fire Symbols ..... 2.25.1.
Explosives Loaded Aircraft ..... 3.25.
Explosives Movement Routes On Base ..... 2.68.
Explosives Stocks ..... 2.29.
Exposed Explosives Precautions ..... 2.71.6.
Exposed Site ..... 3.9.
Facilities Not Related..... 3.13.6.
Facility Modifications Or Change In Use, Siting ..... 4.7.
Factors For Converting Gallons Of Propellant Into Pounds ..... Table 3.20.
Federal Regulation ..... 2.60.
Fire Alarms ..... 2.20.
Fire Drills ..... 2.19.
Fire Extinguishers ..... 2.22.
Fire Prevention Requirements ..... 2.21.
Fire Protection Guidance ..... 2.18.
Fire Symbol Hazards And Actions ..... Table 2.2.
Fire Symbol, Dimensions ..... 2.25.4.
Fire Symbol, Exceptions To Posting..... 2.25.8.
Fire Symbol, Obtaining..... 2.25.5.
Fire Symbol, Posting..... 2.25.7.
Fire Walls ..... 4.19.
Firebreaks..... 2.21.3.
Firefighting Direction Symbol ..... 2.25.3.

Firefighting, Storage Of Water ..... 2.23.
Fireworks Displays ..... 2.9.
Fixed Ladders ..... 4.27.
Flammable Liquids For Cleaning ..... 2.21.5.
Flammable Material Storage ..... 2.21.6.
Flashlights And Lanterns ..... 2.50.
Flightline Munitions Holding Areas ..... 2.37.12.
Forward Firing Munitions ..... 3.25.1.
Fragment Distance ..... 4.49.
Fragments ..... 4.49.
Fusible Links ..... 2.27.8.
Gasoline Or Diesel-Powered Materials Handling Equipment ..... 2.73.
Government Owned Vehicle (GOV) Parking ..... 3.17.1.
Grounding Aircraft For Explosives Loading And Unloading ..... 2.57.
Grounding And Static Electricity ..... 2.51.
Hand Lights ..... 2.50.
Handling And Movement Precautions ..... 2.12.
Handling Equipment, Battery-Powered Materials ..... 2.72.
Handling Equipment, Gasoline Or Diesel-Powered Materials ..... 2.73.
Handloading ..... 2.37.9.
Hardened Aircraft Shelters ..... 3.20.
Hazard Classification Requirements ..... 2.63.
Hazard Symbol, Dimensions ..... 2.25.4.
Hazard Symbol, Exceptions To Posting ..... 2.25.8.
Hazard Symbol, Obtaining ..... 2.25.5.
Hazard Symbol, Posting ..... 2.25.7.
Health And Environment ..... 2.6.
Heat-Producing Devices ..... 2.21.1.
Housekeeping ..... 2.10.
Hunting ..... 2.13.
Incendiary Equipment And Document Destroyers ..... 2.37.6.
Incoming Shipments ..... 2.67.

Inhabited Building (IB)Distance ..... 3.2.1.
Inspection Of Incoming Loaded Railcars ..... 2.76.14.
Inspection Of Incoming Shipments ..... 2.74.15.
Inspection Of Outgoing Shipments ..... 2.74.16.
Inspections In Storage Structure Containing Explosives ..... 2.32.
Interior Finishes And Floors ..... 4.18.
Intermagazine Distance ..... 3.2.4.
Interservice Explosive Facilities ..... 3.13.3.
Intraline Distance ..... 3.2.3.
Inventory, Opening Containers For ..... 2.32.8.
Items Or Situations Not Requiring A License ..... 2.36.
Lanterns And Flashlights ..... 2.50.
Laundries ..... 4.37.
LGM-118 (Peacekeeper) ..... 3.33.
LGM-30 (Minuteman) ..... 3.32.
Licensed Explosives Storage Locations ..... 2.35.
Lighting, Permanent, For Magazines ..... 2.49.
Lightning Protection, Requirements And Exceptions ..... 2.54.
Liquefied Petroleum(LP)And Compressed Natural Gas(CNG)Fuel vehicles ..... 2.71.7.
Liquid Propellants ..... 3.30.
Load Protection ..... 2.71.3.
Load Stability ..... 2.71.4.
Loading And Bracing Guidance ..... 2.76.9.
Loading Docks ..... 3.15.
Loading Railcars ..... 2.76.8.
Local Written Procedures ..... 2.3.
Locomotives ..... 2.76.1.
Magazine Storage Requirements ..... 2.28.
Maintenance And Repairs To Equipment And Buildings: ..... 4.46.
Maintenance Of Vehicles Carrying Explosives: ..... 2.74.20.
Manufacturing And Loading Plants, Water Flow ..... 4.43.
Marking Railcars With Blue Flags Or Signals ..... 2.76.6.

Measuring Distance ..... 3.10.
Measuring Distance, Liquid Propellants ..... 3.30.7.
Minuteman Handling Team (MHT) Facility ..... 2.37.11.
Missile Separation ..... 3.34.
Missiles Mixed On Trailer ..... 3.34.8.
Missiles, Tactical Separation ..... 3.34.
Mixed Compatibility ..... 2.43.
Mixed Trailer Loads, Missiles ..... 3.34.10.
Modular Storage Restrictions ..... 3.23.
Module Description And Siting Criteria In Austere Areas ..... 3.22.
Morale, Welfare, And Recreation (MWR) Activities ..... 2.37.10.
Motor Vehicle Transportation: ..... 2.74.
Movement Of Explosives Shipments By Air ..... 2.77.
Movement Of Railcars Containing Explosives ..... 2.76.3.
Movement Routes For Explosives, Onbase ..... 2.68.
Multicubes ..... 2.41.
Munitions In Austere Areas ..... 3.21.
Munitions Maintenance Related Facilities ..... 3.13.2.
Net Explosives Weight for Quantity Distance (NEWQD) ..... 3.4.2.3.
On-Scene Guidance To Emergency Personnel ..... 2.25.
Open Storage Sites In Austere Areas ..... 3.24.
Opening Containers For Inventory ..... 2.32.8.
Opening Containers For Removal Of Items In Storage ..... 2.32.7.
Operating Inside Storage Spaces Containing Explosives ..... 2.32.
Operating Instructions (OIs) ..... 2.3.
Operating Limits, Posting ..... 2.5.3.
Operating Support Equipment ..... 2.21.7.
Outdoor Storage Sites ..... 2.28.4.
Packing ..... 2.65.
Paint And Other Flammable Material ..... 2.21.6.
Passageways ..... 4.29.
Personnel Limits, Posting ..... 2.5.3.

Personnel Limits ..... 2.5.
Personnel Qualifications ..... 2.2.
Petroleum, Oil, And Lubricants Facilities ..... 3.29.
Piggyback Explosives Loading And Unloading Sites ..... 2.76.18.
Placarding Of Railcars ..... 2.76.10.
Placarding Vehicles ..... 2.71.2.
Planned Detonation Or Burns ..... 3.27.
Planned Detonation ..... 3.27.
Planning For Contingencies ..... 1.4.
Platforms, Runways, And Railings ..... 4.28.
Posting Explosives Limits ..... 2.5.1.
Posting Operating Limits ..... 2.5.2.
Posting Personnel Limits ..... 2.5.3.
Posting Symbols ..... 2.25.7.
Powerhouse Equipment ..... 4.35.
Privately Owned Vehicles (POV) Parking ..... 3.17.2.
Processing Waivers And Exemptions ..... 5.6.
Proficiency Ranges ..... 3.28.1.
Protective Clothing And Equipment ..... Table 2.3.
Public Traffic Route Distance ..... 3.2.2.
Quantity Distance, Types Of Separations ..... 3.2.
Quantity-Distance ..... 3.1.
Quantity-Distance, Determining Separation ..... 3.11.
Quantity-Distance, Measuring Distance ..... 3.10.
Rail Holding Yards ..... 3.16.3.
Rail Interchange Yard ..... 3.16.2.
Railcar Marking With Blue Flags Or Signals ..... 2.76.6.
Railcar Requirements ..... 2.76.11.
Railcars Containing Explosives, Movement Of ..... 2.76.3.
Railcars Or Vehicles Spotted At Operating Buildings ..... 3.16.
Railcars, Loading ..... 2.76.8.
Railcars, Placarding Of ..... 2.76.10.

Railcars, Piggyback, Loading And Unloading Site ..... 2.76.18.
Railcars, Sealing Of ..... 2.76.12.
Railcars, Spotting At Operating Building ..... 2.76.4.
Railroad Right-of-Way, Control Of Vegetation Along ..... 2.76.7.
Railroad Transportation ..... 2.76.
Real Property Contaminated With Ammunition And Explosives ..... 6.1.
Refrigeration ..... 4.36.
Reinforced Concrete Walls ..... 4.20.
Related (Non) Facilities ..... 3.13.6.
Related Facilities ..... 3.13.
Repairing Containers ..... 2.33.
Repairing Explosives Facilities ..... 2.34.
Requirements For Storage Locations ..... 2.27.
Retail Stores ..... 2.37.8.
Risk Assessment ..... 4.47.
Risk Assessment ..... 1.5.
Risk Assessment Of Training And Exercise Plans ..... 2.16.
Roads, Drainage ..... 2.27.4.
Roads, Walks, And Gates ..... 4.30.
Rocket Storage Checkout And Assembly Building ..... 3.14.
Rod And Gun Clubs ..... 2.37.7.
Safety Certification Of Munitions Systems ..... 2.8.
Safety Chutes ..... 4.24.
Safety Chains ..... 2.71.8.
Safety Requirements For Specific Facilities And Explosives ..... 2.27.
Separation Criteria For Controlled Burning ..... 2.21.4.
Separation Requirements For Licensed Explosives Storage Locations ..... 2.35.3.
Shipment Of Explosives, Damaged Or Failed To Function ..... 2.66.
Shipments, Air ..... 2.77.
Shipments, Inspection Of Incoming ..... 2.74.15.
Shipments, Inspection Of Outgoing ..... 2.74.16.
Shipments, Incoming ..... 2.67.

Shipments, Railroad ..... 2.76.
Simulators And Smoke Producing Munitions ..... 2.15.
Site Planning Format Options ..... 4.13.
Site Plans Involving Violations Of Explosives Safety Standards ..... 4.9.
Site Plan Submission Process ..... 4.3.
Site Planning, Computerized ..... 4.12.
Site Plans, Basic Guidance ..... 4.2.
Siting COBs Or Other Bases Used Only For Contingencies Or Exercises ..... 4.14.
Siting For Contingencies Or Exercises ..... 4.14.
Siting Non Explosive Exposed Sites (Es) ..... 4.6.
Siting Non Explosive Exposed Sites (Es), Exceptions ..... 4.6.
Siting Potential Explosive Sites (PES) ..... 4.5.
Siting Potential Explosive Sites (PES), Exceptions ..... 4.5.1.
Siting, Computerized ..... 4.12.
Siting, Tiered ..... 4.10.
Smoke Grenades, Use In Training/Exercises ..... 2.15.
Smoking ..... 2.11.
Specific Items And Situations, Minimum Distances ..... Table 3.26.
Specific Situations Requiring Explosives Site Plan Submission ..... 4.4.
Sprinkler Systems, Automatic ..... 4.44.
Stacking Combustible Material ..... 2.21.8.
Stairways ..... 4.26.
Static Electricity ..... 2.51.
Static Grounding ..... 2.52.
Static Or Public Display ..... 2.7.
Steam For Processing And Heating ..... 4.38.
Storage Magazines ..... 2.28.
Storage ..... 2.26.
Storing Water For Firefighting ..... 2.23.
Substantial Dividing Walls ..... 2.41.
Survival/Rescue Equipment ..... 2.37.2.
Tactical Missile Separations ..... 3.34.

Temporary Storage ..... 2.63.2.
Termination of Use of Facilities Storing Ammunition and Explosives ..... 6.6.
Testing, Disassembly And Modification Of Explosives ..... 2.79.
Tier Siting And Risk Management ..... 4.10.
Track Layout ..... 2.76.2.
Trailers Or Flatcars, Loading Or Unloading Site ..... 2.76.18.
Training Ammunition Within Munitions Storage Area ..... 2.14.
Training And Exercise Plans ..... 2.16.
Transportation Guidance ..... 2.71.
Transportation Of Explosives By Water ..... 2.78.
Transportation, Railroad ..... 2.76.
Transporting Dangerously Unserviceable Explosive Items For Disposal ..... 2.75.
Transporting Electroexplosive Device ..... 2.71.1.
Transporting Explosives ..... 2.71.
Tunnels ..... 4.34.
Unserviceable Explosives Items ..... 2.31.
Using EOD Tool Kits At Off-Range Locations ..... 3.28.3.
Vegetation Along Railroad Right-of-Way ..... 2.76.7.
Vegetation Control ..... 2.21.2.
Vegetation, Burning ..... 2.21.4.
Vehicle And Material Handling Equipment General Safety Requirements ..... 2.70.
Vehicle Chocks ..... 2.74.4.
Vehicle Inspection Requirement ..... 2.74.3.
Vehicle Operations Inside Structures ..... 2.71.10.
Vehicle Parking Areas ..... 3.17.
Vehicle Refueling ..... 2.71.5.
Ventilation ..... 4.39.
Waivers, Exemptions & Deviations - General Information ..... 5.1.
War Reserve Material (WRM) Vehicles Parking ..... 3.17.3.
Warehouses ..... 3.18.
Waste Military Munitions ..... 7.3.
Water Flow For Explosives Manufacturing Areas And Loading Plants ..... 4.43.

Windows And Skylights ..... **4.31.**
Withdrawal Distances For Planned Detonations ..... **3.27.**
Withdrawal Distances ..... **Table 2.1.**
Withdrawal Distances For Essential Personnel ..... **2.24.**
Withdrawal Distances For Nonessential Personnel ..... **2.24.2.**
Written Procedures..... **2.3.**

Attachment 10

Q-D GUIDANCE FOR ON-BASE ROADS

A10.1. In order to prevent the generation of a significant number of quantity-distance exemptions, the new DoD 6055.9-STD requirements allow the DoD components to establish procedures for assessing, documenting, and accepting the risks associated with application of Q-D criteria to on-base roads for Potential Explosion Site (PES)/on-base road relationships which existed prior to 1 Oct 00. Q-D criteria is based on the traffic density (PTR or IBD). After 1 Oct 00, any changes to a PES which increase its Q-D arc, construction of a new PES, or construction of a new on-base road, will require application of Q-D criteria to on-base roads which are traveled by personnel not involved in PES-related operations. If Q-D criteria cannot be met, the formal exemption requirements of AFMAN 91-201 must be followed.

A10.2. For those sited (DDESB- or AFSC-approved or MAJCOM baseline-approved) PES/on-base road relationships which existed prior to 1 Oct 00, we require the following risk assessment and documentation be accomplished:

A10.2.1. On a copy of the installation map, identify the following:

A10.2.1.1. All PESs having Q-D arcs (PTR or IBD based on traffic density) encompassing on-base roads traveled by personnel not involved in munitions-related operations.

A10.2.1.2. The Net Explosives Weight for Quantity-Distance (NEWQD) of the above PESs.

A10.2.1.3. The applicable Q-D arcs (PTR or IBD) of the above PESs based on the traffic density.

A10.2.1.4. The segments of the applicable on-base roads which pass through the above arcs.

A10.2.2. Perform a risk assessment of the relationships shown above in accordance with Operational Risk Management procedures. Some factors that might be considered include:

A10.2.2.1. Operational necessity.

A10.2.2.2. The operation being performed (e.g., static storage, maintenance, and production).

A10.2.2.3. Operational activity cycles.

A10.2.2.4. Alternate routes.

A10.2.2.5. Traffic density.

A10.2.2.6. Accident records.

A10.2.2.7. Time interval of exposure.

A10.2.2.8. Type and quantity of munitions in proximity to the area transited.

A10.2.2.9. The closest distance from the area transited to the PES.

A10.2.2.10. The need for installation-related personnel to transit the ESQD arc.

A10.2.3. Document the commander's risk acceptance through a formal memorandum. This memorandum must include the map showing the relationships for which he/she is accepting risk, a summary of the risk assessment, and a statement that the subject relationships existed as of 1 Oct 00.

A10.3. It is highly recommended that the above risk assessment and documentation be accomplished as soon as possible to accurately capture the relationships, which existed as of 1 Oct 00, and to avoid DDESB survey findings. The commander's risk acceptance and attached map must be included in amendments to site plans (for PESs which existed prior to 1 Oct 00), or referenced if previously submitted with another site plan amendment, which do not increase the Q-D arc. As stated previously, after 1 Oct 00, any changes to a PES which increase its Q-D arc, construction of a new PES, or construction of a new on-base road, will require application of Q-D criteria to on-base roads which are traveled by personnel not involved in PES-related operations.

Attachment 11

TEXT OF IC 2001-1 TO AFMAN 91-201

IC 2001-1 TO AFMAN 91-201, EXPLOSIVES SAFETY STANDARDS

18 October 2001

SUMMARY OF REVISIONS

This change incorporates new Department of Defense Explosives Safety Board (DDESB) criteria, clarifies guidance, and updates references. Specifically it list MAJCOM JA coordination for non-DoD munitions storage requests (paragraph **1.3.2.**); updates Operational Risk Management references throughout the manual; adds information on fusible links (paragraph **2.27.7.**); clarifies explosives license procedures (paragraphs **2.35.** - **2.35.6.**); clarifies static electricity and grounding guidance (paragraphs **2.51.** - **2.51.3.2.**); clarifies side flash guidance (paragraph **2.54.1.3.**); updates electromagnetic radiation hazard guidance (paragraphs 2.54.2.1. - 2.54.2.5.); provides expanded guidance on clear zones extending past the base boundary (paragraph **3.2.1.1.**); updates quantity-distance criteria and notes (**Table 3.3.**.); incorporates new criteria for EOD procedures (paragraphs **3.28.1.**, **3.28.1.7.**, **3.28.3.6.**, 3.28.7., **3.28.4.4.**, **3.28.4.9.** and **3.28.4.10.**); updates AIM-7 with WAU-17 warhead guidance (paragraphs **3.34.5.** - **3.34.6.**, and **Table 3.26.**.); adds new terms and definitions to glossary; updates AF Form 943 guidance (**Attachment 4**); provides new DDESB guidance for PTR criteria (**Attachment 10**). A star (↔) indicates revision from the previous edition.

1.1.1. Observe explosives safety practices during all operations (includes war time, preparation for war, armistice, heightened tensions, etc.) that include the use of live explosives.

1.3.1. Listed below are examples of storage or disposal activities involving non-DoD owned or non-Air Force approved ammunition and explosives or other energetic materials on Air Force installations that may be authorized provided the requirements set forth in paragraphs **4.1.3.5.** and **5.2.8.**, and Table 3.27 are met:

1.3.2. Requests for Secretary of Defense or SAF determinations (as referenced above) will be in memorandum format. Units will forward requests through their MAJCOMs, and will obtain MAJCOM SE and JA coordination (JA refer to full text of 10 USC 2692 with 1998 Authorization Act changes) prior to forwarding to HQ AFSC/SEP. Units need not always submit a single letter for each and every time non-DoD explosives must be stored on base. Instead, units can list the items, quantities and length of time they know or can reasonably expect they'll have to store for the coming year, or for however far into the future they can realistically predict. Include in these requests explanations of how the storage of the non-DoD explosives will directly or indirectly benefit either the US government or its citizenry. Examples of potentially justifiable reasons include (but are not necessarily limited to) public safety, support to a federal agency other than DoD; cooperation with state and local governments; support for US Government Foreign Military Sales; DoD-supported commercial space launch activities; enhanced military operations or products, greater military personnel proficiency, and national defense.

1.3.5. For licenses involving privately owned ammunition outside the United States and Guam, obtain the installation's judge advocate coordination in part V of the AF Form 2047, **Explosives Facility License**; this will ensure no host nation laws are being violated.

1.5. Commanders Risk Assessment. Explosives safety criteria in this manual help commanders make informed decisions on the proper mix of combat readiness and safety. These criteria specify minimum acceptable standards for explosives safety. Departure from explosives safety standards must only result from operational necessity and all risks associated with the departure must be completely understood and accepted by the appropriate approval authority. According to AFI 90-901*, Operational Risk Management*, the following ORM principles apply: (1) Accept no unnecessary risk, (2) Make risk decisions at the appropriate level, (3) Accept risk when benefits outweigh the costs, (4) Integrate ORM into Air Force Doctrine and planning at all levels. Refer to AFPAM 90-902, *Operational Risk Management (ORM) Guidelines and Tools*, for methods on eliminating or reducing risk to support the six-step process of Operational Risk Management (see **Figure 1.1.**). If explosives safety quantity-distance standards cannot be met, the WSM will process the exception in accordance with **Chapter 5**.

2.2. Personnel Qualifications. Personnel who work with explosives will be trained in accordance with AFI 91-202, Chapter 10, and qualified in the tasks to be performed. They must understand all safety standards, requirements, and precautions that apply to their operations. The supervisor must be knowledgeable of all the hazards involved in the operation, convey emergency procedures to the workers and visitors, and maintain strict housekeeping standards. The supervisor must also know what steps to take when abnormal conditions arise.

2.3. Locally Written Instructions. Develop written instructions, approved by the squadron commander or equivalent, for explosives operations. If other documents such as technical orders and safety briefings cover all applicable items required in paragraph **2.4.** below, separate written instructions are not required.

2.8.1. Purchase of commercial off the shelf (COTS) explosives or munitions items is prohibited unless they are approved for purchase by OO-ALC/WMOI, 6064 Dogwood Avenue, Hill AFB, UT 84056-5816. Submit requests for approval according to AFI 21-201, *Management and Maintenance of Non-Nuclear Munitions*, Chapter 32.

2.8.2. Emergency requirements are approved by HQ AFSC/SE, 9700 Avenue G SE, Kirtland AFB NM 87117-5671. Air Force laboratories or research and development activities are exempt from these purchasing limitations.

2.12. Handling Explosives and Movement Precautions. Only trained personnel under the supervision of an individual who understands the hazards and risks involved in the operation are to handle explosives. This paragraph applies to handling explosives and movement of explosives within the immediate vicinity of the operation. Follow this guidance:

2.12.8. Always consider vehicle and handling equipment type, type of load, and prevailing weather and surface conditions when determining if safe movement is feasible.

2.12.9. Restraining devices designed for use with vehicle and handling equipment will be used in accordance with applicable technical orders.

2.15.3.9. Required distances may be reduced by barriers designed in accordance with TM5-1300, *Structures to Resist the Effects of Accidental Explosions*. Provide the design criteria to HQ AFSC/SEW for approval.

2.15.5. Ground burst or hand grenade simulators present a blast hazard. Exercise caution around people, facilities and equipment. Free the area of combustible material within a ten feet radius. Monitor for proper functioning and disposal of residue. Notify EOD or other qualified personnel when a munition malfunctions. The on scene commander will determine minimum withdrawal distance for malfunctioned ground burst or hand grenade simulators for the given situation. This distance will never be less than the minimum distances given in paragraph **2.24.2.**, or applicable item TOs, whichever is greater.

2.24.2. Non-Essential Personnel. For guidance on how far to withdraw nonessential personnel during fires involving explosives, use **Table 2.1.** When explosives are not involved in fire, such as dropped munitions or partially armed munitions, clear the area initially to a distance of 300 feet (125 feet for simulators and smoke producing devices). After evaluation of the situation, the on-scene commander may adjust the withdrawal distance for non-essential personnel. Nuclear weapons withdrawal distances are listed in TO 11N-20-11, *General Fire Fighting Guidance*.

2.24.3. Withdraw all non-essential personnel an initial distance of 500 feet for improvised explosive devices (IED) up to box size (large briefcase/package 2 cubic feet) and 1,000 feet for barrel size or vehicle type IEDs. On-scene authorities may expand/shrink this distance when the situational analysis warrants it.

2.26.1.2. Place explosives items received without an assigned hazard classification in segregated storage (HC/D 1.1L). Contact HQ AFSC/SEW or OO-ALC/WMOI for assistance.

2.27.8. Where fusible links are installed, leave unpainted, and ensure they are serviceable, properly installed, and rated for a maximum temperature of 155° F to 165° F (NSN 4210-00-033-6032 or suitable substitute). Fusible links are designed to release the vent when an outside fire or source of heat threatens the igloo.

2.35. Licensed Explosives Locations. Use AF Form 2047, **Explosive Facility License**, for ammunition and explosives storage locations (not for explosives operations), which are normally outside the base explosives storage area, but within the US Air Force Area of Control. Licenses to store munitions are requested from the installation or host safety office. Quantities of munitions depicted on the license are limited to minimum quantities necessary to support specific, mission essential, explosives operations or missions. Licenses are not to be used for convenience. Individual AF Forms 2047 must be signed by the requesting organization (see **Attachment 3**); coordinated through Munitions Accountable System Officer, the local Security Forces Resource Protection office and the Base Fire Protection agency prior to being signed by the Base Weapons Safety Office. Display licenses at the licensed facility.

2.35.1. Licensed Compatibility. Compatibility groups A, K, and L are not to be licensed. Compatibility requirements specified elsewhere in this manual do not apply.

2.35.2. Quantity Distance. Except for specific quantity distance requirements outlined below, quantity distance requirements depicted elsewhere in this manual do not apply.

2.35.2.1. Quantity distance is not a factor for any amount of licensed hazard class/division 1.4 explosives.

2.35.2.2. A minimum separation of 25 feet is required between licensed locations containing hazard class/division 1.3 explosives and adjacent explosives operations, personnel, or other licensed locations containing hazard class/division 1.3, (04)1.2, or 1.2.2. Where 25 feet cannot be obtained, a 2 hour fire wall, constructed in accordance with paragraph **4.19.** is required.

2.35.2.3. A minimum separation of 100 feet is required between licensed locations containing hazard class/division (04)1.2 or 1.2.2 explosives and adjacent explosives operations, personnel, or other licensed

locations containing hazard class/division 1.3, (04)1.2 or 1.2.2 explosives. Where 100 feet cannot be maintained, a fragment barrier that provides protection equal to 1/4 inch mild steel plate or one layer of sand bags is required. A barrier or wall constructed in accordance with paragraph **4.20.** is acceptable without supporting analysis.

2.35.3. Maximum Licensed Quantities. The quantities of explosives, expressed as NEWQD may not be exceeded on any one license.

2.35.3.1. Mission essential quantities of hazard class/division 1.4 explosives.

2.35.3.2. Hazard class/division 1.3 explosives, 100 pounds NEWQD.

2.35.3.3. Hazard class/division 1.2.2 or (04)1.2, 50 pounds NEWQD.

2.35.3.4. Where hazard class/division 1.3 and 1.2.2 or (04)1.2 are licensed in the same location, the cumulative NEWQD is limited to 100 pounds, not to exceed 50 pounds HC/D 1.2.2 or (04)1.2.

2.35.4. Operations Involving Licensed Explosives. The unit/squadron commander (or equivalent) approves local written procedures (see paragraph **2.4.**) as the authorization for operations involving licensed explosives. An ESP is not required as a PES, but may be required as an ES if located within any other PES clear zone. Safe separation distances must meet the minimum distances specified in paragraph **2.35.2.** above.

2.35.5. Mobility Storage. Explosives and chemical items designated for mobility should be stored within the base munitions storage area until ready for shipment (exception: deploying unit has an extremely short timeline requirement that makes it impossible to store within the MSA). Licensing pre-positioned mobility explosives is permitted if a properly sited area is not available. The license is valid only for the duration of the mobility tasking.

2.35.6. Exercises. Licensing munitions locations used solely for exercises, such as the ground burst simulators, smoke grenade storage, etc., is permitted. This license is valid only for the duration of the exercise.

2.35.7. Validation and Inspection of Explosives Facility License. Base weapons safety personnel validate the license request and the quantity of explosives to be kept, ensuring only the smallest quantities needed to support requirements are authorized. Before granting the license, the installation weapons safety and security representatives must physically inspect the facility to ensure:

2.35.7.1. The structure or room used for storage can be locked to prevent pilferage and unauthorized handling. Contact Security Forces for resource protection requirements.

2.35.7.2. Fire and chemical symbols are available for posting in accordance with paragraph **2.25.7.1.**

2.35.7.3. When necessary use dunnage to provide ventilation around explosives stocks and protect them from moisture and heat buildup.

2.35.7.4. The base fire chief has coordinated on the license and included the type and quantity of fire extinguishers, their placement at the licensed location and any additional fire prevention practices.

2.35.8. Renew licenses each time a hazard class, type or quantity of explosives changes. Review each license at least annually for continued requirement and applicability. Revoke licenses when the requirement no longer exists. Ensure the user displays a copy of the license and operating procedures at each storage location. When Munitions Operations (AFK) issues suitable substitutions for stock listed items, revision and renewal of the license is not required as long as the hazard/ class division, NEWQD, compatibility group, and quantity does not change. Place an asterisk (*) next to the stock number listed in column

"C" of the AF Form 2047 that is posted at the location and enter in the "Remarks" block, "*Suitable substitute issued."

2.36. Items or Situations not Requiring a License. Paragraph **2.35.** does not apply to the storage of small arms ammunition (.50 caliber or less), commercial maritime distress signals and like items held by base exchanges and individuals in family housing. However, if the base exchange stores primers and smokeless powder, complete a license and apply the limitations of paragraph **2.37.8.** This exception also applies to locations storing less than 1000 rounds of HC/D 1.4 small arms ammunition or cartridges for cartridge actuated tools (up to 5,000 feet of shock tube) and locations storing thermal batteries. However, this exception for quantities less than 1,000 rounds of HC/D 1.4 does not apply to the on base storage of bird scare ammunition, privately owned ammunition belonging to dormitory and billeting residents; or approved commercial off the shelf explosives, (except as noted in this manual). These ammunitions will always be stored in approved, licensed explosives storage locations, regardless of quantity. See also paragraph **2.37.2.**

2.37.2. Survival/Rescue Equipment. A license is not required for assembled parachutes, survival and rescue kits, life rafts and life preservers containing authorized explosives when kept in personnel equipment rooms or life raft, survival equipment and life support shops. A license will be required for those areas in which survival equipment explosive components are stored. An operating instruction, approved by the commander (see paragraph **2.4.**), is required for all survival/rescue shop operations involving explosive components.

2.37.3. Riot Control Items. If required, store riot control and smoke grenades (except white phosphorus "WP" grenades) with small arms ammunition in arms rooms and other such locations. However, if the arms room is collocated with a facility where personnel are under physical restraint or confinement, the National Fire Codes, Standard 101, Life Safety Code, applies. Don't store 40 millimeter grenades, pyrotechnics, tear gas or chemical irritant in the room regardless of the Q-D class/division or compatibility, unless the arms room has protective features which completely protect detainees from the effects of accidental explosives activation. Protective features include fragment barriers, blast doors, and exhaust fans. Qualified engineers must evaluate capabilities of protective features. Limit the quantity to the smallest amount needed to support approved contingency plans.

2.37.4.1. Ejection seats, canopies, and explosives components not undergoing actual maintenance, will be stored in a separate location other than within the maintenance area. Ejection seats may only be stored in the maintenance area while maintenance is being conducted on other seats, if all explosive components have been removed from the seats to be stored and placed in a separate storage location.

2.37.4.3. Turn in unserviceable explosive components/items to the base munitions storage area as quickly as possible to preclude build-up of unserviceable NEWQD. Unserviceable NEWQD must be counted against the total NEWQD of the licensed facility.

2.37.9.13. Cover tables used for hand loading with a seamless, nonporous, non-sparking conductive material.

2.37.12. Flightline Munitions Holding Areas. Identify these areas by a physical boundary (such as rope and stanchions). Post signs to keep unauthorized personnel out of the area and to prohibit smoking within 50 feet. Post explosives limits and ensure authorizations are not exceeded. Provide fire extinguishers and post fire symbols. If providing permanent shelter for personnel, position missiles so the shelter is out of radial alignment with the warheads. Secure according to AFI 31-101 and DoD 5100.76-M, or return munitions to MSA for storage.

2.37.13. (Delete this paragraph)

(Change paragraph number 2.37.14 to 2.37.13)

2.41.1. Cells with 12-inch reinforced concrete substantial dividing walls or equivalent protection may be filled to capacity with HC/D 1.2.2 and 1.2.3 items. This also applies to HC/D 1.2.1 items if there is a 3 feet stand off and the NEWQD per package is less than 100 pounds. Also the Maximum Credible Event (MCE) must be less than 425 pounds. See paragraph **3.5.2.3.** for determining MCE. When using the provisions in this subparagraph, each cell may be considered a separate facility with equivalent IM distance between cells, for determining NEWQD in Q-D calculations.

2.51. Static Electricity. Static electricity is created when charges are allowed to accumulate to the point where an uncontrolled discharge occurs. This discharge can cause a mishap if it occurs through, or in the presence of, a hazardous substance susceptible to electrostatic initiation.

2.51.1. Some hazardous substances are more susceptible to electrostatic initiation than others. Extra caution should be used to minimize the potential of electrostatic discharge during operations involving:

2.51.1.1. Exposed propellants (excluding C-4).

2.51.1.2. Unpacked electrically initiated explosive devices.

2.51.1.3. Hazardous locations (see paragraph **2.46.**).

2.51.2. Personnel can minimize the possibility and severity of a buildup of static electricity by:

2.51.2.1. Avoiding using rags or wearing outer garments made of materials which have high-static generating characteristics (e.g., 100% polyester, nylon, rayon, silk, wool, etc.). Wool socks, glove inserts, and caps as well as undergarments of synthetic fabrics are less of a hazard than outer garments such as jackets or pants.

2.51.2.2. Using rags or wearing outer garments made of cotton or a cotton-synthetic blend. Normally, clothing materials acceptable for flightline use (per TA 016) are acceptable for handling munitions. This includes Gortex which is 100% nylon.

2.51.2.3. Minimizing exposure to conditions which aid the buildup of static electricity such as cold, dry climates or dry, windy climates.

2.51.2.4. Minimizing activities which aid the buildup of static electricity such as physical motion or contact with moving non-conductive substances.

2.51.3. Personnel can minimize the possibility and severity of a discharge of static electricity by:

2.51.3.1. Discharging their static electric potential (or equalizing it to that of the system being handled) prior to touching the system. NOTE: Always avoid directly touching an electrical primer.

2.51.3.2. Minimizing activities which can discharge static such as removing outer garments.

2.52.1. Grounding Equipment. The method generally used to eliminate or reduce the hazard from static electricity is to provide an electrically continuous path to ground. A resistance of 25 ohms is common. These grounds should be one continuous ground wire/cable/strap. Short ground wires/cables/straps should not be connected together to make a longer one. Additionally, each ground wire/cable/strap should be connected to the item and/or facility ground individually. Connecting multiple ground wires/cables/straps to another ground wire/cable/strap connecting mechanism (alligator clip, clamp, etc.) should be avoided.

2.52.1.5. When making a grounding connection, you should attach the ground wire/cable/strap to the item requiring grounding first, then connect the other end of the ground wire/cable/strap to the approved facility grounding system; this ensures that if a spark occurs, it will occur at the connection to the facility grounding system instead of at the item. When a different or new ground is needed for the same item, always make the new ground connection first (in the same manner as previously described) before you disconnect the existing ground connection (make-before-break grounding); this ensures that the item will be grounded at all times while transitioning from one ground connection to another.

2.54.1.3.1. Side flash protection for nuclear weapons. In the following sentences, the term "intrusive maintenance" means maintenance that includes operations performed inside the weapon's sealed case. When conducting intrusive maintenance operations inside a HAS, maintain a 7-foot minimum distance between an LPS unmodified WMT and the ceiling, walls, and metallic conductors (such as a tool box or metal cabinet) inside the HAS. If no WMT is being used, maintain that same 7 feet distance from the weapon itself and the HAS's ceiling, walls, and metallic objects. When using an LPS unmodified WMT, include the stairs and attached support equipment while measuring the 7-foot distance. When using an LPS modified WMT, no minimum distance is required provided all additional safety requirements are adhered to in accordance with TO 11N-20-7.

2.54.1.3.1.2. If any metallic conductor is within 7 feet of a facility's wall or ceiling, the buffer between the weapon and the wall or ceiling must be at least 7 feet plus the width of the metallic conductor(s). For example, a weapon may not be placed closer than 10 feet from a wall having a 3-foot wide toolbox against it.

2.54.1.8. Lightning Protection Exceptions. Properly maintained lightning protection is required for ammunition and explosives facilities, with the following exceptions provided that the responsible commander accepts the loss of resources and structure at the location without LPS or inadequate LPS and any potential collateral damage to other nearby exposures (except for sub-paragraphs **2.54.1.8.3.**, **2.54.1.8.4.**, and **2.54.1.8.8.**). The commander's risk acceptance must be documented by letter (i.e., signed by the commander stating he/she understands and accepts the potential loss of resources and structures at the location without LPS and any potential collateral damage to other nearby exposures) and this letter must be submitted as part of the explosives site plan request package.

2.54.1.8.2. Facilities where personnel are not expected to sustain injury and, at the same time, the resulting economic loss of the structure, its contents or surrounding facilities is minimal.

2.54.1.8.3. Air terminal systems are not required on HASs or on metal aircraft shelters.

2.54.1.8.4. Lightning protection systems may be omitted on flightline PESs if the system interferes with flightline criteria.

2.54.1.8.5. Facilities used for temporary (non-recurring) storage of munitions.

2.54.1.8.6. Structures, facilities, or mobile equipment housing explosives or explosives operations not regularly situated at a fixed location.

2.54.1.8.7. Structures and facilities limited to the storage or handling of small arms ammunition where the value of the ammunition is $10,000 or less.

2.54.1.8.8. Licensed explosives locations outside the explosives storage area but situated in buildings primarily used for other purposes and that have relatively small quantities of explosives. ***NOTE:*** This exemption from additional or special lightning protection is made because of the explosives. Other contents of the building may require protection.

2.54.2. (Delete this paragraph)

2.54.2.1 through 2.54.2.5. (Delete these paragraphs)

2.55.2.2. Unless the test equipment is incapable of initiating the item being tested, operational shields should be provided where needed to protect personnel from injury.

2.58.2.1. EEDs are typically designed to be initiated by low levels of electrical energy. As such, they are susceptible to unintentional ignition by many forms of direct or induced electrical energy such as from lightning discharges, static electricity, or turbo-electric (friction-generated) effects. Another aspect of this hazard is the accidental initiation of EEDs by radio frequency (RF) energy due to ground and airborne emitters.

2.58.2.2. Electromagnetic energy can be either conducted or radiated. Conducted electromagnetic energy is imposed on circuits from other subsystems or sources by various methods. Examples are inductive or capacitive coupling from other cabling, sneak ground circuits, defective components or wiring, or errors in design.

2.58.3. The requirements in this section are designed to preclude inadvertent EED initiation from radiated electromagnetic energy. Susceptibility to electromagnetic radiation (EMR) is dependent on a number of variables. Among these are the no-fire sensitivity level of the EED; the configuration of the leads, circuit, or installation; and the frequency and power density of the EMR environment.

2.58.4. The primary means for insuring EMR does not cause inadvertent EED initiation is by limiting the power density to levels below the no-fire sensitivity threshold of the EEDs. This is done by maintaining a safe separation distance between the emitter and the EED(s). This distance is a factor of the effective radiated power (ERP) and frequency of the emitter. ERP is a product of the transmitter power and the gain of the transmitting antenna. Antenna gain is a measure of the power channeled by a directional antenna. It is usually provided in decibels (dB). Sometimes it is provided as a unitless number, G_t. Use the following formula to convert between G(dB) and G_t:

$$G_t = \log^{-1}[G(dB)/10] = 10^{[G(dB)/10]}$$

Frequency is measured in hertz (Hz) or cycles per second. Use the following formulas to convert between kHz (1000 Hz), MHz (1,000,000 Hz), and GHz (1,000,000,000 Hz):

1 kHz = .001 MHz

1 GHz = 1000 MHz

Transmitter power, P_t, is expressed in watts (W). If a transmitter is pulsed, it will have both a peak and average P_t. Generally, peak P_t is the best number to use when determining ERP. However, pulsed systems with small pulse widths (less than 1 millisecond) may be more accurately represented by average power (see note 3 to **Table 2.5.**).

2.58.5. **Table 2.5.** should be used as a guide in setting up safe separation distances between EEDs and the transmitting antenna of all RF emitters or determining the maximum power density allowable for an EED. These calculations are based on “worst-case” assumptions, such as EEDs with a maximum no-fire sensitivity of 50 mW and far-field conditions. The far field of the antenna provides a more consistent power density environment than that found in the near field. The following formula can be used to determine where the far field begins:

$R_{ff} = 2D^2f/c$ where

R_{ff} = distance, in meters, from transmitting antenna where the far field begins

D = largest dimension of the antenna, meters

F = frequency (Hz)

c = speed of light, 3×10^8 m/s

For near field conditions, see TO 31Z-10-4, Chapter 4, Section 2.

2.58.6. Safe Separation Distance Criteria.

2.58.6.1. Column A, Worst Case or Unknown Configuration. When EEDs are unshielded, or the leads or circuitry could inadvertently be formed into a resonant dipole or loop antenna, or the configuration of the EEDs is unknown.

2.58.6.2. Column B, Exposed EEDs. When EEDs are exposed due to maintenance, assembly, or disassembly or the item or munition which contains the EED is exposed due to maintenance, assembly, or disassembly.

2.58.6.3. Column C, EEDs in Storage or Ground Transport in a Metallic Container. When EEDs are stored or in a ground transport configuration inside a conductive (metallic) container. This includes EEDs assembled in a weaponized configuration when the weapon case provides a conductive shield.

2.58.6.4. Column D, EEDs in Storage or Ground Transport in a Non-Metallic Container. When EEDs are stored or in a ground transport configuration inside a non-conductive (non-metallic) container such as wood or plastic.

2.58.6.5. Column E, EEDs In or On Aircraft. When EEDs or the item or munition containing them are in a transport configuration inside cargo aircraft or externally loaded on an aircraft.

2.58.6.6. Column F, Leadless EEDs. When EEDs do not have lead wires and are in the original shipping configurations and/or containers. This does not include handling and/or installing leadless EEDs (column B applies).

2.58.6.7. When unclear about the appropriate configuration and column to apply from **Table 2.5.**, use the most conservative, i.e., the greatest distance or largest power density.

2.58.7. Maximum Power Density Criteria.

2.58.7.1. When electrical characteristics of the EEDs are not known or when the minimum safe separation distances cannot be complied with because of lack of real estate or other limitations, a power density and field intensity survey should be made. Compare the measured power density with the recommended maximum power density calculated from **Table 2.5.** The measured power density must be no greater than the maximum power density.

2.58.7.2. When more than one transmitter is operating in an area, each at a different frequency, the maximum allowable power density is the greatest power density calculated for each of the transmitters.

2.58.8. Approximate calculations for safe separation distances can also be made using the nomograph provided in **Figure 2.3.** Example 1 in paragraph **2.58.10.** illustrates how to apply this nomograph.

2.58.9. Assistance Requests. Same as **2.58.10.**, except change “SA-ALC/NWI” to “AAC/WN.”

(Change subsequent paragraph numbers as follows: 2.58.10.1 to 2.58.9.1; 2.58.10.2 to 2.58.9.2; 2.58.10.3 to 2.58.9.3; 2.58.10.4 to 2.58.9.4; and 2.58.11 to 2.58.10)

Table 2.5. Recommended EED Safe Separation Distances and Power Densities.

Column	**A**	**B**		**C**	**D**		**E**	**F**
Configuration of EED	**Worst Case or Unknown**	**Exposed EED**		**EED in Storage or Transport**			**EED in Or On Aircraft**	**Leadless EED**
				(Metal Container)	**(Non-metal Container)**			
Recommended Separation Distance (or Formula for Distance)	Use **Figure 2.3.** or Column B	**Frequency**	**Formula**	$D = .093 \times \sqrt{P_t G_t}$	**Frequency**	**Formula**	$D = .093 \times \sqrt{P_t G_t}$	D=10 feet
		Up to 20khz	$D = .093 \times \sqrt{P_t G_t}$		Up to 63kHz	$D = .093 \times \sqrt{P_t G_t}$		
		20kHz to 2MHz	$D = 4.63 f \times \sqrt{P_t G_t}$		63kHz to 2MHz	$D = 1.46 f \times \sqrt{P_t G_t}$		
		2MHz to 48.5 MHz	$D = 9.26 \times \sqrt{P_t G_t}$		2 MHz to 48.5 MHz	$D = 2.93 \times \sqrt{P_t G_t}$		
		48.5 MHz to 4.85GHz	$D = \frac{450}{f} \times \sqrt{P_t G_t}$		48.5 MHz to 1.53 GHz	$D = \frac{142}{f} \times \sqrt{P_t G_t}$		
		4.85GHz to 45GHz	$D = .093 \times \sqrt{P_t G_t}$		1.53 GHz to 45 GHz	$D = .093 \times \sqrt{P_t G_t}$		
Recommended Maximum Power Density	$P_o = \frac{0.01W}{m^2}$	Up to 20kHz	$P_o = \frac{100W}{m^2}$	$P_o = \frac{100W}{m^2}$	Up to 63kHz	$P_o = \frac{100W}{m^2}$	$P_o = \frac{100W}{m^2}$	Not Applicable
		20kHz to 2 MHz	$P_o = \frac{.04}{f^2}$		63kHz to 2 MHz	$P_o = \frac{.4}{f^2}$		
		2MHz to 48.5 MHz	$P_o = \frac{0.01W}{m^2}$		2MHz to 48.5MHz	$P_o = \frac{0.1W}{m^2}$		

Column	A	B		C	D		E	F
Configuration of EED	Worst Case or Unknown	Exposed EED		EED in Storage or Transport			EED in Or On Aircraft	Leadless EED
				(Metal Container)	(Non-metal Container)			
		Frequency	Formula		Frequency	Formula		
		48.5 MHz to 4.85 GHz			48.5MHz to 1.53GHz	$P_o = 4.256 \times 10^{-5} \times f^2$		
		4.85GHz to 45GHz	$P_o = \frac{100W}{m^2}$		1.53GHz to 45GHz	$P_o = \frac{100W}{m^2}$		

NOTES:

1. In the formulas above:

D = distance (ft)

f = frequency (MHz)

P_t = transmitter power (W)

G_t = antenna gain. To convert from G (dB), use $G_t = \log^{-1}[G(dB)/10]$

P_o = maximum power density (W/m^2)

2. Use peak power for P_t except for pulsed systems with pulse widths less than one millisecond (ms). In this case, use the larger of 1) the average power or 2) (peak power) x (largest pulse width expressed in ms)/1 ms. Note: 1 ms = .001 seconds.

3. For EEDs with a no-fire sensitivity less than 50 mW, request assistance in accordance with paragraph **2.58.10.**

4. For frequencies outside the ranges specified in **Table 2.5.**, request assistance in accordance with paragraph **2.58.10.**

5. Formulas in **Table 2.5.** apply to the far field of the antenna only. For near field requirements, see TO 31Z-10-4, Chapter 4, Section 2. Far field is determined by

$R_{ff} = 2D^2f/c$

R_{ff} = far field range in meters

D = largest dimension of the antenna in meters

f = frequency in Hz

c = speed of light, 3×10^8 m/s

2.67. Guides for Controlling Incoming Explosives Shipments. Review guidance in the Transportation Facilities Guide maintained by Military Traffic Management Command (MTMC). Contact the base transportation officer for this guide. The base transportation officer is responsible for maintaining the base information current in the MTMC database. Clearly state in notification procedures the NEWQD (and MCE if applicable), by hazard class/division, that can be received at unloading facilities (i.e., railheads, ports, hot cargo pads, etc).

2.70.1. For emergency responses in vehicles without separate cargo compartments (i.e., Robot Vans, Metro type vehicles, HMMWV), EOD units are authorized to transport minimum essential quantities of all HC/Ds inside the vehicle. Separate the incompatible explosives to the maximum extent possible.

2.74.14.3. Drivers must be qualified to operate the vehicle and knowledgeable of the explosives being transported and associated hazards. In addition, Air Force civilian drivers must have a Commercial Drivers License, with a hazardous materials endorsement, to transport explosives off a military installation. See AFI 24-301, *Vehicle Operations*.

2.74.18.3. No restrictions are imposed on tractor maintenance when the tractor is separated by at least 100 feet from an explosives-loaded trailer.

2.81.1. Don't use live munitions items for verification, validation, or electrical testing of aircraft or other weapons systems. This does not prevent the conduct of RDT&E and OT&E flight testing or “Built In Test” (BIT) checks or other low-current aircraft testing with live explosives installed, as long as doing so does not conflict with other USAF/DoD guidance, such as T.O. 11A-1-33. If inert munitions items are not available in the inventory, obtain MAJCOM approval prior to using live items. Provide MAJCOM a risk assessment that includes appropriate compensatory measures.

2.85. Support Facilities. These include those facilities used to store, stage, or process large rocket motors and motor segments. The same facility may be used for both staging and processing these motors. Take thermal and toxic properties as well as potential explosive effects in accordance with applicable directives such as TM5-1300, *Structures to Resist the Effects of Accidental Explosions,* into consideration prior to selecting or constructing operational maintenance and staging facilities for large rocket motors and motor segments.

3.2.1.1. Base Boundary. If a proposed PES would create an IBD clear zone extending beyond the base boundary, the hazard becomes a legal issue and the installation must obtain a restrictive easement from the land owner for the off-base land encumbered by the clear zone prior to establishing or constructing the PES. The only exception is if the area (land or water) is open and both manifestly unsuitable for habitation and for public gatherings. Only appropriate local government agencies for public safety, environment and health can declare land outside the base boundary unsuitable for habitation or public gatherings. Documentation determining this land unsuitable for habitation must be maintained with real property records. The commander, Facility Board, and facility user must be briefed and accept the need to reduce/eliminate NEWQD in the PES creating the clear zone to prevent an exception should a new encumbrance occur. The commander will designate personnel to perform a quarterly review of the area to ensure it remains open, uninhabited and unused and he/she should periodically reconsider obtaining a restrictive easement or purchasing the land. The commander, Facility Board, and facility user must be briefed and accept the need to reduce/eliminate NEWQD in the user’s facility to prevent an exception should a new encumbrance occur before funding construction of the user’s proposed facility. Upon DDESB-KO preliminary approval of the proposed site plan, the unit will secure the restrictive easement to prevent the encroachment from

non-related personnel and facilities. Documentation substantiating the easement agreement will be submitted with the final approval request.

3.2.1.1.1. Existing Restrictive Easements. Prior to establishing any PES that will have an explosives safety clear zone extending past the base boundary SE, CE, and JA representatives must review and ensure compliance with applicable in-place restrictive easement rights.

3.2.1.9. High density public traffic routes. These routes are considered "high density" if they have 10,000 or more car and/or rail passengers per day, or 2,000 or more ship passengers per day. When making an estimate of traffic density, use the default value of two passengers per car. Traffic density shall be averaged over a normal (non-holiday) week in terms of the passengers during a 24-hour period. See **Attachment 10** for additional guidance.

3.2.1.10. Ground control approach (GCA), radar approach control (RAPCON), and air traffic control towers that support a joint use airfield (from all PESs). Use incremental IBD for GCA, RAPCON, and air traffic control towers that support a military use only airfield from non-flightline PES.

3.2.1.13. (Delete this paragraph)

3.2.1.14. (Delete this paragraph)

3.2.2. Public Traffic Route (PTR) Distance. This is the minimum permissible distance between PESs and PTR exposures. For HC/D 1.1 and 1.2, it is normally 60% of inhabited building distance. PTR and IB for HC/D 1.3 and 1.4 are the same. Apply PTR separation to: (list is not all inclusive) (see **Attachment 10** for additional guidance)

3.2.2.6. Medium Traffic Density. If routes have 400 or more, but less than 10,000 car and/or rail passengers per day, or 80 or more, but less than 2,000 ship passengers per day, then 60% of the specified minimum fragmentation distance for IB applies. Medium traffic density criteria apply, as a minimum, to recreational activity that is extensive and occurs on a regular basis. If routes have less than 400 car and/or rail passengers per day, or less than 80 ship passengers per day, then no minimum fragmentation distance is required (this small number of passengers is considered low density). Minimum distance shall be based on blast criteria (K24/K30) only. See **Attachment 10** for additional guidance.

(Change subsequent paragraph numbers as follows: 3.2.2.8 to 3.2.2.7; 3.2.2.9 to 3.2.2.8; and 3.2.2.10 to 3.2.2.9)

3.2.3.8. GCA, RAPCON, and air traffic control towers that support a military use only airfield from flightline PES.

3.3.3. Partial calculated criteria to prevent breaching (intraline protection) based on a 12 inch reinforced concrete wall with explosives 3 feet off of floor (see **Table 3.1.**).

3.5.1.4. Explosives and munitions in HC/D 1.1 will also generally present a fragmentation hazard, either from the case of the explosive device or from the packaging or facility in which the explosives are stored. Unless otherwise specified, a minimum distance of 1,250 feet will be used to separate HC/D 1.1 explosives NEWQD of 450 pounds or more from inhabited buildings. For NEWQD between 31-450 pounds use **Table 3.9.** or **Table 3.26.** Some munitions items have been tested and demonstrated to have less than the specified 1,250 ft fragment hazard. In these instances, the minimum IBD will be given in parentheses where the hazard classification is listed, such as (07)1.1 for a 700-foot minimum IBD.

3.5.4. Class/Division 1.4 (Moderate Fire, No Blast). These items present a fire hazard but no blast hazard. There is virtually no fragmentation or toxic hazard beyond the fire hazard clearance ordinarily specified for high-risk materials.

3.10.4. Where explosives are outdoors on open vehicle or open railcars, measure distances to and from the explosives. This also applies to explosives carried externally on aircraft which are parked either in the open or inside approved lightweight shelters.

3.10.7. Measure to the nearest point of a non-explosives location, building, aircraft or taxiway.

3.10.14. Measure from the edge of facility pad if it will be used to hold munitions.

3.10.15. Measure to edge of aircraft cargo hold for internally-loaded explosives.

3.10.16. Measure to the edge of the roadway/pavement for PTRD.

3.11.2.2. Specific minimum distances for HC/D 1.2.x and some HC/D 1.1 and 1.3 explosives. Based on testing or analogy, fragment distances have been determined for some specific stocklisted items. Specific minimum distances, when known, are shown in hundreds of feet by a numerical Figure (in parentheses) to the left of the HC/D designator. For example, (07)1.1 would indicate a HC/D 1.1 item with a 700-foot-minimum IB distance. Minimum PTR distance (paragraph **3.2.2.**) would be 60 percent of 700 feet, or 420 feet.

3.12.1. Protection against high-speed, low-angle fragments. Properly constructed or natural barricades provide protection against low angle fragments. Barricades or earth-covered structures eliminate the risk of propagating explosions caused by low-angle, high-speed fragments and should prevent simultaneous detonation of an explosion. Barricade elevation is effective when a straight line, drawn from a point described in paragraph **3.12.1.1.** to a point described in paragraph **3.12.1.2.**, passes through the top width of the barricade. A barricade of this elevation should prevent simultaneous detonation of an explosion from one quantity of mass-detonating explosives to another (see **Figure 3.2.**).

3.12.1.2.1. The highest point of any exposure being protected.

3.12.1.2.4. (Delete this paragraph)

3.12.4. Artificial Barricades. Select cohesive earth fill, free from unhealthy organic matter, trash, debris and frozen material. Don't use stones heavier than 10 pounds or larger than 6 inches and keep in the lower center of the barricade. Compact and prepare the surface to keep structural integrity and control erosion. Effective artificial barricades are:

3.20.1. The separations shown in **Table 3.16.** provide reasonable assurance that aircraft in closed hardened shelters will remain operable should an explosion occur in an adjacent shelter or ready service storage facility. These aircraft may not be immediately removable due to debris. For shelters with third generation-type rear doors, the aircraft may be damaged substantially unless modifications have been made to prevent the rear doors from being blown against the aircraft.

3.20.4. HASs used solely as permanent maintenance facilities would normally be classified as related facilities and require IL separation from supported PES (HAS containing combat configured aircraft, etc.). However, because TAB VEE and second and third generation HAS provide increased protection to equipment and personnel, the reduced separations shown in **Table 3.16.** are permitted with the following provisions:

3.20.5. AIM-7, AIM-9, and AGM-65 missiles meeting the missile-to-missile separation requirements of paragraph **3.34.** may use the separations in **Table 3.18.** For the AIM-7M with the WAU-17/B warhead, use **Table 3.18.**, if no more than three warheads are in radial alignment. If necessary, store 20mm and 30mm ammunition with these missiles.

3.20.5.1. (Delete this paragraph)

3.20.5.2. (Delete this paragraph)

3.20.5.3. (Delete this paragraph)

3.21.10. Site tri-service or joint use storage facilities under the standard criteria, DoD 6055.9. However, if operational requirements prescribe, austere area criteria apply to any part of the facility falling directly under Air Force control.

3.21.6. Open Storage. Open storage is authorized for all HC/D of munitions and explosives. Give priority for cover to items requiring protection from the elements, considering the type packing material involved. Comply with **Table 3.3.** except for separation between open storage sites, pads, and modules (above ground magazines), used solely for the storage of non-mass detonating CBUs in metal containers and/or 20mm and 30mm ammunition in metal containers. Such locations will be separated from each other by a minimum distance of 70 feet for a maximum of 500,000 pounds NEWQD. All other normal Q-D requirements apply.

3.22.4. Barricades must comply with the appropriate requirements of this chapter. Module barricades must comply with the 2-degree rule in paragraph **3.12.**

3.24. Reserved For Future Use.

3.25.2. Airfield Explosives-Prohibited Areas. Explosives, explosive facilities, and parked explosives-loaded aircraft will be excluded from Runway Clear Zones and Accident Potential Zones I and II. For rotary wing aircraft, do not site explosives or activities involving explosives within the Landing Lane Clear Zone and Accident Potential Zone. For further details, see AFMAN 32-1123 (I), *Airfield and Heliport Planning and Design,* AFI 32-7063, Air *Installation Compatible Use Zone Program,* and AFH 32-7084, *AICUZ Program Managers Guide.*

3.25.4. ***EXCEPTION:*** Aircraft configured with the items listed below are exempt from Q-D site planning requirements when evaluated as a PES. This does not include ammunition and explosives carried as cargo. Park in a designated aircraft parking area meeting airfield criteria and treat the aircraft as explosives-loaded in all other respects. The following munitions can be uploaded and downloaded at the designated aircraft parking area provided that the quantity of munitions being loaded or unloaded is limited to a single aircraft load. Munitions delivery trailers (i.e., UALS, BDU, flare & chaff mods, captive-carry missiles) are considered in the transportation mode (QD-exempt) provided the trailers do not remain at the designated aircraft parking area longer than the loading/unloading operation being conducted.

3.25.4.2. HC/D 1.3 Installed Aircraft Defensive Flares. Externally loaded munitions such as LUU-1/2 flares and 2.75” training rockets require Q-D.

3.25.4.3. HC/D 1.4 munitions (i.e., chaff squibs, captive-carry training missiles, BDU-33s).

3.25.4.4. Installed explosives necessary for safe flight operations. See glossary and TO 11A-1-33 for further information.

3.25.5. Uploading and downloading of munitions will be conducted in explosives sited aircraft parking areas with the exceptions listed in paragraph **3.25.4.** and its subparagraphs.

3.25.6. (Delete this paragraph)

3.27.1.6. (Delete this paragraph)

(Change subsequent paragraph number 3.27.1.7 to 3.27.1.6)

3.27.1.1.4. Check environmental compliance and Resource Conservation and Recovery Act (RCRA) requirements and permits for this operation. For overseas locations, check Status of Forces Agreement and/or applicable technical agreements for any applicable environmental protection requirements.

3.27.2.2. From burning areas to all locations involving personnel that are not essential to the planned burn, or for non-explosives related facilities apply K40 (1,250-foot minimum).

3.28.1. Proficiency Ranges. Because the quantity of explosives required to maintain EOD proficiency is small, criteria for an EOD training range are not as stringent as required for actual disposal operations. Limit EOD training ranges to a maximum of 5 pounds of demolition explosives. Use only non-fragmenting charges (Boot Banger, bare C-4, Conical Liquid Follow Through, etc.), shaped charges (Mk 7 series, Mk 2, flex linear etc) explosive powered tools (Mk-2 dearmer, Percussion Actuated Non-electric Disruptor, etc). Explosively formed penetrators including but not limited to the Mk 23, Mk 24, and Mk 788 Main Charge Disruptor are not authorized for use. When siting these ranges, as an ES use incremental PTR distance from other PES based on the NEWQD of the other PESs. Construct and site as follows:

3.28.1.7. If the proficiency training range is located on an existing disposal range and meets separation distance from the detonation point to the perimeter of the disposal range in accordance with the requirements listed in TO 11A-1-42, section 1, then barricades identified in paragraph **3.28.1.2.** are not required.

3.28.3.6. Stand-off disrupter.

3.28.3.7. Stand-off dearmer.

3.28.4.4. Twenty feet of standard detonating cord (DODIC M456).

3.28.4.9. Five stand-off disrupter blank cartridges.

3.28.4.10. Shock Tube as required.

3.34. Tactical Missile Separations (see Table 3.26.).

3.34.3. AIM-7 Missiles with WAU-17 Warhead in an AURC. All missiles in an AURC will sympathetically detonate, therefore the MCE is all four warheads in the AURC (36 lbs x 4 or 144 lbs).

3.34.4. When AIM-7 missiles (with WAU-17) are in the open or light structures that do not stop primary fragments, the hazardous fragment distance (IBD) varies with the number of warheads subject to sympathetic detonation (those in radial alignment and at less than 100 inches from each other) as follows:

# Warheads	IBD
1	280
2	565
3	770

# Warheads	IBD
4	955
5	1,120
6	1,245
≥7	1,250

3.34.5. When AIM-7 missiles (with WAU-17) are in a heavy structure (other than ECMs) capable of stopping primary fragments, use **Table 3.9.** to determine the hazardous fragment distance. MCE is the total number of warheads in the structure, unless a lesser MCE is approved by AFSC/SEW. Heavy structures are those with a wall thickness ≥12 inches of reinforced concrete and a roof thickness >5.9 inches of reinforced concrete. For ECMs, use **Table 3.26.**, Line 8.

3.35.3.1. For F-16, Configuration 3, with only AIM-120A, AIM-120B, and AIM-120C1 through C3 missiles: NEWQD = 16.9 lbs, IMD = 29 ft, ILD = 47 ft, PTR = 300 ft, and IBD = 500 ft.

3.40.8. (Delete this paragraph)

3.40.9. (Delete this paragraph)

(Change subsequent paragraph numbers as follows: 3.40.10 to 3.40.8; 3.40.10.1 to 3.40.8.1; 3.40.10.2 to 3.40.8.2; 3.40.11 to 3.40.9; 3.40.12 to 3.40.10; 3.40.13 to 3.40.11; 3.40.13.1 to 3.40.11.1; 3.40.13.2 to 3.40.11.2; 3.40.13.2.1 to 3.40.11.2.1; 3.40.13.2.2. to 3.40.11.2.2; 3.40.13.2.3 to 3.40.11.2.3; 3.40.13.2.4 to 3.40.11.2.4; 3.40.13.2.5 to 3.40.11.2.5; 3.40.13.2.6 to 3.40.11.2.6; 3.40.13.3 to 3.40.11.3; 3.40.14 to 3.40.12; 3.40.14.1 to 3.40.12.1; and 3.40.14.2 to 3.40.12.2)

3.41. 40mm Ammunition in Armories. Cartridges, 40mm, HEDP, M433 stored in CNU 541/E Containers (modified MK 387 MOD 0 containers with CEMCOM buffer liners) are hazard classified as HD 1.2.2, with an NEWQD of 0.102 pounds per cartridge. This hazard classification is for storage only. Cartridges may not be offered for transportation by commercial carriers in this packaging configuration.

Table 3.2. Maximum HC/D 1.1, 1.2.1, and 1.2.2 Explosives Allowed.

Table 3.3. Quantity Distance Criteria.

HAZARD CLASS/DIVISION 1.1 (35)												
	COLUMN		1	2	3	4	5	6	7	8	9	10	
LINE	FROM: POTENTIAL EXPLOSIVES SITE (PES) TO: EXPOSED SITE (ES) (10)(72)(76)		EARTH COVERED IGLOO (1) SIDE (61)	REAR (61)	FRONT (5)(39)	BARRI-CADED MODULE (38)	ABOVE GROUND MAGAZINE UNBARRI-CADED (2) (3) (5)	ABOVE GROUND MAGAZINE BARRI-CADED (2) (3) (5)	OPERATING LOCATION REMOTELY CONTROLLED (76)	OPERATING LOCATION UNBARRI-CADED (46) (5)	OPERATING LOCATION BARRI-CADED (3) (46) (5)	MISSILE BATTERY DEFENSIVE	LINE
1	Side	7 Bar	K1.25 (14)	K1.25 (14)	K2.75 (14)	K4.5	K4.5	K4.5	K4.5	K4.5	K4.5	K4.5	1
	Side	3 Bar	K1.25 (14)	K1.25 (14)	K2.75 (14)	K6	K6	K6	K6	K6	K6	K6	
	EARTH	Undef	K1.25 (63)	K1.25 (63)	K4.5 (63)	K6	K6	K6	K6	K6	K6	K6	
	COVERED	"	K2 (64)	K2 (64)	K6 (64)								
2	IGLOO (1)	7 Bar	K1.25 (14)	K1.25 (14)	K2	K4.5	K4.5	K4.5	K4.5	K4.5	K4.5	K4.5	2
	Rear	3 Bar	K1.25 (14)	K1.25 (14)	K2	K6	K6	K6	K6	K6	K6	K6	
	Rear	Undef	K1.25 (14)	K1.25 (14)	K2	K6	K6	K6	K6	K6	K6	K6	
3	Front	7 Bar	K2.75 (14)	K2	K6	K6	K6	K6	K6	K6	K6	K6	3
	(39)Unbari	3 Bar	K4.5	K4.5	K9	K9	K9	K9	K9	K9	K9	K9	
	(5) -caded	Undef	K6	K6	K11	K11	K11	K11	K11	K11	K11	K11	
4	Front	7 Bar	K2.75 (14)	K2	K6	K6	K6	K6	K6	K6	K6	K6	4
	Barri	3 Bar	K4.5	K4.5	K6	K6	K6	K6	K6	K6	K6	K6	
	-caded	Undef	K6	K6	K6	K6	K6	K6	K6	K6	K6	K6	
5	ABOVE GROUND MAGAZINE UNBARRICADED (2)		K6	K6	K11 (7)	K6	K11 (78)	K6	K11	K11	K6	K11 (7)	5
6	ABOVE GROUND MAGAZINE BARRICADED (2) (3)(5)		K6	K6	K6	K6	K6	K6	K6	K6	K6	K6	6
7	BARRICADED MODULE (38)		K1.25 (14)	K1.25 (14)	K6	K1.1 (4)	K6	K6	K6	K6	K6	K6	7
8	OPERATING LOCATION UNBARRICADED		K18 (6) (61)	K18 (6) (61)	K18 (61)	K18 (6)	K18	K18 (6)	K24	K18	K18 (6)	K18	8
9	OPERATING LOCATION BARRICADED (3) (5)		K18 (6) (61)	K18 (6) (61)	K18 (6) (61)	K18 (6)	K18 (6)	K18 (6)	K24	K18 (6)	K18 (6)	K18 (6)	9
10	COMBAT AIRCRAFT PARKINGAREA (65)		K30	K30	K30	K30	K30	K30	K30	K30	K30	K30 (7)(23)(68)	10
11	AIRCRAFT EXPLOSIVES CARGO (32) PARKING AREA		K6 (68)	K6 (68)	K11 (7)(68)	K6 (68)	K11 (7)(68)	K6 (68)	K30	K11 (7)(68)	K6 (68)	K11 (7)(23)(68)	11
12	FLIGHTLINE MUNITIONS HOLDING AREA		K6	K6	K11 (7)	K6	K11 (7)	K6	K24	K11 (7)	K6	K11 (7)	12
13	HARDENED AIRCRAFT SHELTER (12) (37)		K5 (51)	K5 (51)	K8 (51)	K8 (51)	K8 (51)	K8 (51)	K24	K8 (51)	K8 (51)	K18 (51)	13
14	DEFENSIVE MISSILE BATTERY		K6	K6	K11 (7)	K6	K11 (7)	K6	K24	K11 (7)	K6	K11 (7)	14
	COLUMN		1	2	3	4	5	6	7	8	9	10	

Table 3.3. Continued.

	Hazard Class/Division 1.1 (35)					Hazard Class/Division 1.2				HC/D 1.3	HC/D 1.4	
	11	12	13	14	15	16	17	18	19	20	21	
LINE	COMBAT AIRCRAFT PARKING AREA (18)(37)(67)	AIRCRAFT EXPLOSIVE CARGO PARKING AREA (32)	FLIGHT-LINE MUNITIONS HOLDING AREA	HARDENED AIRCRAFT SHELTER (EXCEPT 3RD GENERATION (12)(37)(70)	HARDENED AIRCRAFT SHELTER3RD GENERATION (12)(37)(70)	ALL TYPES OF POTENTIAL EXPLOSION SITES (11) (13)(57)(75)(78) 1.2.1 MCE >100 lbs	1.2.1 MCE <100 lbs	1.2.2	(xx)1.2.3 (74)	ALL TYPES OF POTENTIAL EXPLOSION SITES (13) (21) (31)(55)(76)	ALL TYPES OF POTENTIAL EXPLOSION SITES (13)(19) (20)	LINE
1	K4.5 K6 K6	K4.5 K6 K6	K4.5 K6 K6	K4.5 K6 K6	K4.5 K6 K6	50' MIN (26)	50' MIN (26)	50' MIN (26)	50' MIN (26)	(58)	50' MIN (26)	1
2	K4.5 K6 K6	K4.5 K6 K6	K4.5 K6 K6	K4.5 K6 K6	K4.5 K6 K6	50' MIN (26)	50' MIN (26)	50' MIN (26)	50' MIN (26)	(58)	50' MIN (26)	2
3	K6 K9 K11	K6 K9 K11	K6 K9 K11	K6 K9 K11	K6 K9 K11	50' MIN (26) 300' MIN	50' MIN (26) 200' MIN	50' MIN (26) 100' MIN	50' MIN (26)	(58)	50' MIN (26)	3
4	K6 K6 K6	K6 K6 K6	K6 K6 K6	K6 K6 K6	K6 K6 K6	50' MIN (26)	50' MIN (26)	50' MIN (26)	50' MIN (26)	(58)	50' MIN (26)	4
5	K11 (7)	K11 (7)	K11 (7)	K11 (8)	K11 (8)	300' MIN (16)(75) (78)	200' MIN (16)(75) (78)	100' MIN (16)(75) (78)	50' MIN (26) (75)(78)	(58) (78)	50' MIN (26)	5
6	K6	K6	K6	K6	K6	300' MIN (16)(75)	200' MIN (16)(75)	100' MIN (16)(75)	50' MIN (26) (75)	(58)	50' MIN (26)	6
7	K6	K6	K6	K6	K6	300' MIN (16)	200' MIN (16)	100' MIN (16)	50' MIN (26)	(58)	50' MIN (26)	7
8	K18	K18 (6)	K18 (6)	K18 300' MIN (6)(40)(41)	IL (62)	T3.8/3.9 IL 300' MIN (77)	T3.8 IL 200' MIN (77)	T3.10 IL 100' MIN	T3.13 .36(IB) 50' MIN (26)	(58)	50' MIN (26)	8
9	K18	K18 (6)	K18 (6)	K18 300' MIN (6)(40)(41)	IL (62)	T3.8/3.9 IL 300' MIN (77)	T3.8 IL 200' MIN (77)	T3.10 IL 100' MIN	T3.13 .36(IB) 50' MIN (26)	(58)	50' MIN (26)	9
10	K18 (7)(22)(23) (68)	K30 (7)(23)(68)	K30 (7)(23)(68)	K30 (8)(23)(68)	K30 (8)(23)(68)	300' MIN (17)(77)	200' MIN (17)(77)	100' MIN (17)	50' MIN (17)	(59) (17)	50' MIN (26)(29) (17)	10
11	K11 (7) (68)	K11 (7) (68)	K11 (7) (68)	K11 (8) (68)	K11 (8) (68)	300' MIN (17)	200' MIN (17)	100' MIN (17)	50' MIN (17)	(58) (17)	50' MIN (26)(29) (17)	11
12	K11 (7)	K11 (7)	K11 (7)	USE Table 3.17.	USE Table 3.17.	300' MIN (16)(17)	200' MIN (16)(17)	100' MIN (16)(17)	50' MIN (17)	(58) (17)	50' MIN (26) (17)	12
13	K18 (50)	K18 (50)	SEE PARA 3.20.	SEE PARA 3.20.	SEE PARA 3.20.	300' MIN (16)(17)	200' MIN (16)(17)	100' MIN (16)(17)	50' MIN (17)(26)	(58) (17)	50' MIN (17)	13
14	K11 (7)	K11 (7)	K11 (7)	K11 (8)	K11 (8)	300' MIN (16)	200' MIN (16)	100' MIN (16)	50' MIN	(58)	50' MIN (26)	14
	11	12	13	14	15	16	17	18	19	20	21	

Table 3.3. Continued.

HAZARD CLASS/DIVISION 1.1 (35)													
	COLUMN		1	2	3	4	5	6	7	8	9	10	
LINE	FROM: POTENTIAL EXPLOSIVES SITE (PES) TO: EXPOSED SITE (ES) (72)(76)		EARTH COVERED IGLOO (1)			BARRI-CADED MODULE (38)	ABOVE GROUND MAGAZINE UNBARRI-CADED (2) (3) (5)	ABOVE GROUND MAGAZINE BARRI-CADED (2) (3) (5)	OPERATING LOCATION REMOTELY CONTROLLED (76)	OPERATING LOCATION UNBARRI-CADED (46) (5)	OPERATING LOCATION BARRI-CADED (3) (46) (5)	MISSILE BATTERY DEFENSIVE	LINE
			SIDE (61)	REAR (61)	FRONT (5)(39)								
15	AIRFIELD MILITARY USE ONLY (66)	RUN-WAY	K21/30 750' MIN (30)	K15/30 750' MIN (30)	K21/30 750' MIN (30)	K24/30 750' MIN (30)	K24/30 750' MIN (30)	K24/30 750' MIN (30)	K24/30 750' MIN	K24/30 750' MIN (30)	K24/30 750' MIN (30)	NONE REQUIRED	15
16		*TAXI*-WAY	K18 (30)	K18 (30)	K21/30 750'MIN (30)	K24/30 750'MIN (30)	K24/30 750'MIN (30)	K24/30 750'MIN (30)	K24/30 750'MIN	K24/30 750'MIN (30)	K24/30 750'MIN (30)	NONE REQUIRED	16
17	AIRFIELD, JOINT MILITARY/ NON MILITARY USE (66)	RUN-WAY	K35/50 1250'MIN (47) (52)	K25/50 1250'MIN (47) (52)	K35/50 1250'MIN (47) (52)	K40/50 1250'MIN (47)	K40/50 1250'MIN (47)	K40/50 1250'MIN (47)	K40/50 1250'MIN	K40/50 1250'MIN (47)	K40/50 1250'MIN (47)	K40/50 1250'MIN	17
18		TAXI-WAY	K21/30 750'MIN (48) (53)	K15/30 750'MIN (48) (53)	K21/30 750'MIN (48) (53)	K24/30 750'MIN (48)	K24/30 750'MIN (48)	K24/30 750'MIN (48)	K24/30 750'MIN	K24/30 750'MIN (48)	K24/30 750'MIN (48)	K24/30 750'MIN	18
19	NON-EXPLOSIVES LOADED AIRCRAFT (79)		K35/50 1250'MIN (42)(47) (52)	K25/50 1250'MIN (42)(47) (52)	K35/50 1250'MIN (42)(47) (52)	K40/50 1250'MIN (42)(47)	K40/50 1250'MIN (42)(47)	K40/50 1250'MIN (42)(47)	K40/50 1250'MIN	K40/50 1250'MIN (42) (47)	K40/50 1250'MIN (42) (47)	K30 (43)	19
20	PASSENGER LOAD/UNLOAD AREA (45)		K21/30 750'MIN (48) (53)	K15/30 750'MIN (48) (53)	K21/30 750'MIN (48) (53)	K24/30 750'MIN (48)	K24/30 750'MIN (48)	K24/30 750'MIN (48)	K24/30 750'MIN	K24/30 750'MIN (48)	K24/30 750'MIN (48)	K30	20
21	FACILITIES FOR COMBAT A/C ALERT FORCES (49)		K18 (61)	K18 (61)	K18 (61)	K18	K18	K18	K24	K18	K18	K18	21
22	ABOVE GROUND UTILITIES (6)(24)		K21/30 750'MIN (48) (53)	K15/30 750'MIN (48) (53)	K21/30 750'MIN (48) (53)	K24/30 750'MIN (48)	K24/30 750'MIN (48)	K24/30 750'MIN (48)	K24/30 750'MIN	K24/30 750'MIN (48)	K24/30 750'MIN (48)	K24/30 750'MIN	22
23	UNDERGROUND UTILITIES & BULK POL FACILITIES (24)(44)		K3 80' MIN	K3 80' MIN	K3 80' MIN	K3 80' MIN	K3 80' MIN	K3 80' MIN	K3 80' MIN	K3 80' MIN	K3 80' MIN	K3 80' MIN	23
24	ABOVE GROUND BULK POL FACILITIES (44)		K35/50 1250'MIN (47) (54)	K25/50 1250'MIN (47) (54)	K35/50 1250'MIN (47) (54)	K40/50 1250'MIN (47)	K40/50 1250'MIN (47)	K40/50 1250'MIN (47)	K40/50 1250'MIN	K40/50 1250'MIN (47)	K40/50 1250'MIN (47)	K40/50 1250'MIN	24
25	PUBLIC TRAFFIC ROUTE (9)		K21/30 750'MIN (48) (53)	K15/30 750'MIN (48) (53)	K21/30 750'MIN (48) (53)	K24/30 750'MIN (48)	K24/30 750'MIN (48)	K24/30 750'MIN (48)	K24/30 750'MIN	K24/30 750'MIN (48)	K24/30 750'MIN (48)	K24/30 750'MIN	25
26	RECREATION AREA/FACILITY (34)		K21/30 750'MIN (48) (53)	K15/30 750'MIN (48) (53)	K21/30 750'MIN (48) (53)	K24/30 750'MIN (48)	K24/30 750'MIN (48)	K24/30 750'MIN (48)	K24/30 750'MIN	K24/30 750'MIN (48)	K24/30 750'MIN (48)	K24/30 750'MIN	26
27	RELATED FACILITY (36)		K18 (6)(41) (61)	K18 (6)(41) (61)	K18 (6)(41) (61)	K18 (6) (41)	K18 (6) (41)	K18 (6) (41)	K24	K18 (6) (41)	K18 (6) (41)	K18 (6) (41)	27
28	INHABITED BUILDING (60) (33)		K35/50 1250'MIN (47) (52)	K25/50 1250'MIN (47) (52)	K35/50 1250'MIN (47) (52)	K40/50 1250'MIN (47)	K40/50 1250'MIN (47)	K40/50 1250'MIN (47)	K40/50 1250'MIN	K40/50 1250'MIN (47)	K40/50 1250'MIN (47)	K40/50 1250'MIN	28
	COLUMN		1	2	3	4	5	6	7	8	9	10	

Table 3.3. Continued.

	Hazard Class/Division 1.1 (35)					Hazard Class/Division 1.2				HC/D 1.3	HC/D 1.4	
	11	12	13	14	15	16	17	18	19	20	21	
LINE	COMBAT AIRCRAFT PARKING AREA (18)(37) (67)	AIRCRAFT EXPLOSIVE CARGO PARKING AREA (32)	FLIGHT-LINE MUNITIONS HOLDING AREA (30)	HARDENED AIRCRAFT SHELTER (EXCEPT 3RD GENERATION (12)(13) (37)(70)	HARDENED AIRCRAFT SHELTER 3RD GENERATION (12)(13) (37)(70)	ALL TYPES OF POTENTIAL EXPLOSION SITES (11)(13)(57)(75)(78) 1.2.1 MCE >100 lbs	1.2.1 MCE <100 lbs	1.2.2	(xx)1.2.3 (74)	ALL TYPES OF POTENTIAL EXPLOSION SITES (13) (21) (31)(55)(76)	ALL TYPES OF POTENTIAL EXPLOSION SITES (13)(19) (20)	LINE
15	NONE REQUIRED (56)	NONE REQUIRED (56)	NONE REQUIRED (56)	NONE REQUIRED (56)	NONE REQUIRED (56)	T3.8/3.9 PTR 300' MIN (17)(30) (77)	T3.8 PTR 200' MIN (17)(30)(77)	T3.10 PTR 100' MIN (17)(30)	T3.13 .6(IB) (17)(30)	17)(30) (59)	100' MIN (17)(15)	15
16	NONE REQUIRED (56)	NONE REQUIRED (56)	NONE REQUIRED (56)	NONE REQUIRED (56)	NONE REQUIRED (12)(56)	T3.8/3.9 PTR 300' MIN (17)(27) (30)(77)	T3.8 PTR 200' MIN (17) (27)(30)(77)	T3.10 PTR 100' MIN (17)(27)(30)	T3.13 .6(IB) (17)(27)(30)	(17)(30) (59)	100' MIN (17)(15)	16
17	K40/50 1250'MIN (47)	K40/50 1250'MIN (47)	K40/50 1250'MIN (47)	K40 REAR K62 SIDE K50 FRONT (40)	IB (62)	T3.8/3.9 IB 300' MIN (77)	T3.8/ IB 200' MIN (77)	T3.10 IB 100' MIN	T3.13 IB (xx) MIN	(59)	100' MIN (15)	17
18	K24/30 750'MIN (48)	K24/30 750'MIN (48)	K24/30 750'MIN (48)	K24/30 REAR K37 SIDE K30 FRT (40)	PTR (62)	T3.8/3.9 PTR 300' MIN (77)	T3.8 PTR 200' MIN (77)	T3.10 PTR 100' MIN	T3.13 .6(IB)	(59)	100' MIN (15)	18
19	K40/50 1250'MIN (43)(47)	K40/50 1250'MIN (43)(47)	K40/50 1250'MIN (43)(47)	K40 REAR K62 SIDE K50 FRONT (40)	IB (62)	T3.8/3.9 IB 300' MIN (43)(77)	T3.8 IB 200' MIN (43)(77)	T3.10 IB 100' MIN (43)	T3.13 IB (xx) MIN (43)	(43) (59)	100' MIN (15)(43)	19
20	K24/30 750'MIN (48)	K24/30 750'MIN (48)	K24/30 750'MIN (48)	K24/30 REAR K37 SIDE K30 FRT (40)	PTR (62)	T3.8/3.9 PTR 300' MIN (77)	T3.8 PTR 200' MIN (77)	T3.10 PTR 100' MIN	T3.13 .6(IB)	(59)	100' MIN (15)	20
21	K18 (6)	K18 (6)	K18 (6)	K18 300' MIN (6)(40)(41)	IL (62)	T3.8/3.9 IL (77) 300' MIN	T3.8 IL (77) 200' MIN	T3.10 IL 100' MIN	T3.13 .36(IB) 50' MIN (26)	(58)	50' MIN (26)	21
22	K24/30 750'MIN (48)	K24/30 750'MIN (48)	K24/30 750'MIN (48)	K24/30 REAR K37 SIDE K30 FRT (40)	PTR (62)	T3.8/3.9 PTR 300' MIN (77)	T3.8 PTR 200' MIN (77)	T3.10 PTR 100' MIN	T3.13 .6(IB)	(59)	50' MIN	22
23	K3 80' MIN	K3 80' MIN	K3 80' MIN	K3 80' MIN	K3 80' MIN	80' MIN (69)	80' MIN (69)	80' MIN (69)	80' MIN (69)	80' MIN (69)	50' MIN (69)	23
24	K40/50 1250'MIN (47)	K40/50 1250'MIN (47)	K40/50 1250'MIN (47)	K40 REAR K62 SIDE K50 FRONT (40)	IB (62)	T3.8/3.9 IB 300' MIN (77)	T3.8 IB 200' MIN (77)	T3.10 IB 100' MIN	T3.13 IB (xx) MIN	100' MIN (29)(59)	100' MIN (15)(28)	24
25	K24/30 750'MIN (48)	K24/30 750'MIN (48)	K24/30 750'MIN (48)	K24/30 REAR K37 SIDE K30 FRT (40)	PTR (62)	T3.8/3.9 PTR 300' MIN (77)	T3.8 PTR 200' MIN (77)	T3.10 PTR 100' MIN	T3.13 .6(IB)	(59)	100' MIN (15)	25
26	K24/30 750'MIN (48)	K24/30 750'MIN (48)	K24/30 750'MIN (48)	K24/30 REAR K37 SIDE K30 FRT (40)	PTR at (62)	T3.8/3.9 PTR 300' MIN (77)	T3.8 PTR 200' MIN (77)	T3.10 PTR 100' MIN	T3.13 .6(IB)	(59)	100' MIN (15)	26
27	K18 (6)(41)	K18 (6)(41)	K18 (6)(41)	K18 300' MIN (6)(40)(41)	IL (62)	T3.8/3.9 IL 300' MIN (77)	T3.8 IL 200' MIN (77)	T3.10 IL 100' MIN	T3.13 .36(IB) 50' MIN (26)	(58)	50 MIN (26)	27
28	K40/50 1250'MIN (47)	K40/50 1250'MIN (47)	K40/50 1250'MIN (47)	K40 REAR K62 SIDE K50 FRONT (40)	IB (62)	T3.8/3.9 IB 300' MIN (77)	T3.8 IB 200' MIN (77)	T3.10 IB 100' MIN	T3.13 IB (xx) MIN	(59)	100' MIN (15)	28
	11	12	13	14	15	16	17	18	19	20	21	

NOTES:

1. To use this criteria, earth-covered igloos constructed/sited prior to February 1999 must meet the requirements of paragraph **3.2.** and the definition of "earth-covered magazine" in **Attachment 1**. Non-standard constructed/sited prior to February 1999 for explosives weights not exceeding 250,000 pounds remain valid (see paragraph **1.2.3.**). Future sitings must reflect the appropriate criteria.

2. Includes open air munitions stocks, light structures (for example, some Butler buildings), and trucks, trailers or railcars loaded with explosives. See paragraph **3.16.1.** for vehicle inspection point criteria. Also includes modules, see paragraphs **3.22.** through **3.24.**

3. Barricades must meet the requirements of paragraph **3.12.** For igloos the barricades in front of these structures will count for Q-D purposes only when the facility is being looked at as an ES; for these facilities, no credit is given for a front barricaded PES.

4. K1.1 is the minimum separation permitted between stacks of explosives in adjacent barricaded cells within a module and between adjacent barricaded modules. Cells containing structures heavier than metal Butler-type buildings require K6 barricaded and K11 unbarricaded to all other cells containing HC/D 1.1 explosives.

5. For barricading consideration see paragraph **3.12.8.** magazines as Barricaded Structures.

6. Continue to use K9 to properly barricaded facilities sited at K9 before 1 June 1980 until a revised siting of that facility is necessary, except as noted below. K18 separations, or reduced intraline distances from earth-covered igloos in **Table 3.7.** are required for new or revised sitings. Barricades should continue to be used in designing new facilities to limit fragment damage. Continue to use K9 for the following properly barricaded facilities.

a. Hardened response force tactical facilities (RFTF). No barricade is required to use K9 for RFTFs.

b. Facilities of a tactical missile site (from the missiles of the Tactical Missile Site to its manned facilities; also applies to Defensive Missile Batteries).

c. Field operations in magazine areas when performing minor maintenance, packaging or surveillance inspections from adjacent magazines.

d. Unoccupied auxiliary power facilities, transformer stations, water treatment and pollution abatement facilities and other utilities that serve the PES and are not an integral function in the PES. Loss must not create an immediate secondary hazard. These applications need not be barricaded. *Exceptions*: Unoccupied power plants or transformers that exclusively support an explosives area or facility may be separated according NFPA standards. Transformers that directly support a single PES requires no separation.

7. Use K6 if a barricade meeting the requirements of paragraph **3.12.1.** is between the PES and the ES.

8. Use K11 where no revetment wall or barricade protects the ES from the PES. Use K6 where a revetment wall or barricade protects the ES from the PES. No credit is allowed for a shelter wall on a PES.

9. See paragraph **3.2.** for additional exposures requiring PTR separation.

10. MILVAN/ISO container stuffing and unstuffing in a magazine area or munitions storage area are permitted at intermagazine distances.

11. Items in this division present a risk of propagation to adjacent aboveground magazines, particularly when packed in combustible containers. Distances shown are not to be reduced by the presence of barricades or earth cover. Storage in earth-covered igloos is preferred.

12. Separations are based on shelter doors remaining closed, except for aircraft towing, fueling, servicing, run up, or taxi and during integrated combat turnarounds or short periods when maintenance equipment or munitions are being moved into or out of shelters. If doors are left open for extended periods, normal combat aircraft parking area criteria apply out the front.

13. A HAS sited for HC/D 1.2.x (MCE <100 lbs for HC/D 1.2.1), 1.3 or 1.4 explosives doesn't generate a Q-D clear zone except out the front. See FN 15 for additional HC/D 1.4 guidance. For HC/D 1.2.1 (MCE>100), such as HC/D 1.2 CBUs, Durandals, AGM 88s, and 2.75" WP rockets, see **Table 3.3.**, Col 16.

14. When required in austere areas (paragraph **3.21.**), reduce K1.25 to K1.1; reduce K2.75 to K2.5 when limiting igloo contents to those items listed in paragraph **3.23.2.**

15. HC/D 1.4S items may be stored (including associated handling) without regard to Q-D criteria. IBD and PTR will be 75 feet instead of 100 feet for quantities of HC/D 1.4 (other than compatibility group S) for quantities <3000 pounds. IBD and PTR will remain at 100 feet for quantities >3000 pounds. Fire separation distance of 50 feet is required out the sides and rear of earth-covered igloos (except to other igloo side/rear relationships). Out the front of earth-covered igloos 75 feet or 100 feet, as applicable, will be required. All other magazines will apply 75 feet or 100 feet IBD/PTR clear zones as applicable.

16. See paragraph **3.24.** for reduced separations for austere area storage of non mass-detonating CBUs and 20 and 30 mm ammunition.

17. If PES is a combat aircraft parking area, flightline munitions holding area, HAS, or explosives loaded cargo aircraft parking area, no separation is necessary unless the MAJCOM has determined Q-D application is necessary for aircraft survivability. If PES is a non-flightline PES such as a MSA, then use PTR (exception: from MSA PES to an explosives-loaded cargo aircraft parking area ES, use IMD), unless the MAJCOM has determined Q-D application is necessary for aircraft survivability. If aircraft survivability is the objective from any PES, use 1.2x IBD. See **Table 3.8.**, **Table 3.9.**, **Table 3.10.**, and **Table 3.13.** for 1.2.x PTR/IBD as applicable. For aircraft parked inside of a HAS hazarded by 1.2x PES, also use IBD but only consider line-of-sight frontal exposure. A HAS with door normally kept closed and acting as an ES is considered adequate for aircraft survivability. If the MAJCOM chooses not to apply any Q-D separation, they (or wing representative) must inform the commander owning the assets (exposed sites) of the fragmentation hazards of the applicable 1.2x PESs. If PES is a defensive missile battery use IM separation. See paragraphs **3.25.4.** and **3.25.5.** for HC/D 1.3 and 1.4 guidance.

18. Aircraft undergoing end-of-runway arming or dearming are considered in the transportation mode and are exempt from Q-D.

19. Greater than 3,000 pounds of HC/D 1.4 may be sited at 50 feet (100 feet if the ES is of combustible construction) from all other magazines or explosives operating locations regardless of the HC/D or quantity of explosives authorized in the adjacent structures. The responsible commander must accept the fact that an explosion in adjacent structures could result in loss of the HC/D 1.4 stocks and the storage structure. The commander's risk acceptance must be documented by letter (i.e., signed by the commander stating he/she understands and accepts the potential loss of HC/D 1.4 stocks and the storage structure) and this letter must be submitted as part of the explosives site plan request package. Earth-covered structures

may be filled to physical capacity with HC/D 1.4 explosives without requirement for separation to other facilities. See FN 15 for additional guidance.

20. When required for operational necessity, store limited quantities of HC/D 1.4 items without regard for Q-D. See paragraph **2.35.** for licensing requirements.

21. For reasons of operational necessity, 100-pounds NEWQD or less of HC/D 1.3 items may be stored at a licensed location without regard for Q-D. See paragraph **2.35.** for licensing requirements.

22. When parking explosives-loaded combat aircraft at less than intermagazine distance between aircraft within a group, obtain approval from at least the Numbered Air Force (NAF) Vice Commander owning the exposed aircraft (except for ARMCO revetted cells containing two aircraft). If grouping is required for support of a Unified Commander, the Major Air Component Vice Commander having operational control of the aircraft will be the lowest approval. Use K18 between groups. Intervening barricades, although recommended, don't reduce the required separation between groups. With NAF approval, K11 between groups may be used for contingency operations. See paragraph **3.25.** for additional parking criteria. For approved aircraft configurations in a CAPA, see **Figure 3.7.** and **3.8.** and paragraph **3.35.**

23. K30 is required to provide aircraft survivability from blast overpressure. This distance may be reduced to K11 if commanders responsible for the aircraft are advised of and accept the additional risk if aircraft are parked at less than K30.

24. See definition of "Utilities" in **Attachment 1**. If the exposure does not meet the definition of utility, identify the exposure as a service line (see paragraph **2.48.**). Paragraph **3.13.** contains additional guidance on separations required for specific utilities. Refer to paragraph **3.19.** for additional Q-D guidance on electrical utilities. Use paragraph **2.23.** for storage of water for fire fighting. Locate all unprotected water towers and above ground water tanks, whose loss is unacceptable, a minimum of inhabited building distance (IBD) from explosives locations. If loss of the water tower is acceptable, no Q-D is required. Locate tanks and reservoirs below ground level at underground POL separations. Manned or critical environmental exposures such as, operable units, monitoring and test wells that must be located in an explosive clear zone must be separated from a PES by incremental PTR. Other unmanned or non-critical environmental exposures require no separation. Underground electrical and communications lines may be sited at incremental K3 with no minimum required.

25. Reserved for future use.

26. A 75 or 100 foot separation distance, as applicable, must be used to an ES of combustible construction. Wood frame structures are an example of combustible construction. Concrete, masonry, and metal structures are examples of non-combustible construction.

27. No Q-D separation is necessary between an explosives-loaded aircraft parking area and the taxiways exclusively serving or constructed as part of the area.

28. At least 50 feet from combat aircraft parking areas and aircraft explosives cargo parking areas for quantities >3000 pounds (excluding HC/D 1.4S items). Use 75' for ≤3000 pounds or 100' for >3000 pounds for all other PESs (excluding HC/D 1.4S items).

29. The 75 or 100-foot separation distance, as applicable, does not apply to combat aircraft parking areas and aircraft explosives cargo parking areas. All other requirements apply.

30. When required at overseas locations only, use K4.5 (750 min doesn't apply) for HC/D 1.1 PES's and 125 feet for non-mass-detonating PESs. In NATO, use the equation: D=1.8Q1/3, where D is the distance

in meters and Q equals the NEWQD in kilograms. The use of these reduced separations depends on operational necessity, providing the commander accepts the transient risk to military aircraft movements. If siting facilities, the MAJCOM/CC or CV must provide HQ AFSC/SE a letter listing all bases at which these distances will apply and state acceptance of transient risk to military aircraft movements.

31. For intentional static firing for shelf life testing or similar operations see paragraph **3.27.3.**

32. No Q-D separation is necessary from explosives-loaded cargo aircraft when parked 24 hours or less for refueling, servicing, crew rest or change, or maintenance performed under TO 11A-1-33, Handling and Maintenance of Explosives Loaded Aircraft, (applies with all HC/Ds). Keep the aircraft under constant surveillance and do not load, unload, or handle explosives. Park these aircraft on the hot cargo pad. When this is not possible, park as remotely as practical from other explosives or populated areas. Comply with minimum airfield criteria in AFH 32-1084.

33. See paragraph **3.2.1.** for additional exposures requiring IBD separation.

34. Use the listed distances for recreational areas in the open, such as golf courses or tennis courts without structures. Use inhabited building separation where structures, including bleachers, are part of the facility (such as indoor tennis courts or golf clubhouses). No separation is necessary to recreational areas used exclusively by personnel supporting the PES, however, use IL separation from other related PESs.

35. For class division 1.5 items, use C/D 1.1 criteria.

36. See paragraph **3.13.** for additional information and specific requirements. For non-explosive War Reserve Materiel (WRM) see paragraph **3.17.** and **3.18.** For hardened facility criteria see paragraph **3.11.6.**

37. See paragraph **3.20.** for additional information and specific requirements. Use combat aircraft parking area criteria for steel bin revetments and the unhardened front or rear of Korean TAB VEE or Flowthru shelters. See **Table 3.16.** For HC/Ds 1.2, 1.3, and 1.4, use intermagazine separation to protect HAS and maintenance HAS from unrelated PES (such as operating locations, igloos, and above ground magazines). See footnote 17 if aircraft survivability is required.

38. Separations shown apply to side, rear, and barricaded front exposures. For exposures to or from the unbarricaded front of a module, use unbarricaded aboveground magazine criteria. K1.1 is the minimum separation authorized between stacks of munitions in adjacent cells and modules. See paragraphs **3.22.** and **3.23.** for additional guidance concerning modules.

39. Consider the front of an igloo unbarricaded within 60 degrees from either side of the door centerline unless a barricade meeting the requirements of paragraph **3.12.** protects the igloo.

40. Applies to all class/division 1.1 munitions except AIM-7, AIM-9, and AGM-65 missiles. See paragraph 3.20.5.3. for separation distances for these items. Only 50-foot separation is necessary from the sides or rear of the HAS (other than 3rd Generation) for 500 pounds NEW or less.

41. Use the minimum IL distance for specific items and situations in paragraph **3.39.** (**Table 3.26.**).

42. Criteria shown apply to nonmilitary aircraft. Use incremental K30 to military non-explosives loaded aircraft.
MAJCOMs may require greater protection for unique mission or high value airframes.

43. Q-D separations to non-explosives military aircraft parking areas from combat aircraft parking areas, flightline munitions holding areas, and explosives cargo aircraft parking areas are a MAJCOM responsibility. Refer to paragraph **3.13.3.1.** for collocating combat operations.

44. Consider cut and cover POL tanks as underground. Site berm fuel bladders at incremental K40/50 distance with a minimum 400 feet from the PES supported. Q-D from igloos is K35/50 for fronts and sides and K25/50 for rears. (Fuel bladders must be fueled from trucks, underground lines or aboveground lines that have automatic shutoffs.) These standards apply only to bulk POL and the supply lines supporting the storage location. All other fuel systems will be constructed according to NFPA and national consensus standards.

45. Applies to open locations where passengers enplane or deplane. For structures where passengers assemble, such as terminal buildings, use IB distance.

46. See paragraph **3.14.** for specific criteria for rocket storage, checkout and assembly buildings.

47. Use the minimum IB distance for specific items and situations (paragraphs **3.32.** through **3.39.**) or authorized under paragraph **3.11.** in place of the 1,250-foot minimum distance.

48. Use the minimum PTR distance for specific items and situations (paragraphs **3.32.** through **3.39.**) or authorized under paragraph **3.11.** in place of the 750-foot minimum distance.

49. Alert force facilities which house alert crews and essential support personnel for alert aircraft, may be sited at less than K18 if equivalent protection is provided by substantial dividing walls and blast doors. Use greater separation where response time will permit. See Note 76 if the PES hazarding the alert facility is for remotely controlled operations.

50. Use K2.75 to protect against simultaneous detonation. Use K6 barricaded and K9 unbarricaded to the front of a TAB VEE or TAB VEE Modified. Use K8 to maintenance HAS or for aircraft and shelter survival. However, survival criteria to the front of a TAB VEE or modified TAB VEE is K18.

51. All munitions storage area PESs to TAB VEE fronts will apply K 18 if serviceability status of the doors allows them to be closed when aircraft are inside. Otherwise, apply K30 criteria to TAB VEE fronts.

52. K-factors shown apply to 26- by 60-feet or larger igloos. For smaller igloos, use K40/50.

53. K-factors shown apply to 26- by 60-feet or larger igloos. For smaller igloos, use K24/30.

54. K-factors shown apply to 26- by 60-feet or larger igloos. For smaller igloos, use K40/50.

55. When necessary, fill earth-covered igloos to their physical capacity for HC/D 1.3, provided the igloos are properly sited for at least 100 pounds of HC/D 1.1 material.

56. No explosives safety separation required. Apply airfield safety criteria (see paragraph **3.25.**).

57. For front exposures from all earth covered igloos acting as a PES, use **Table 3.3.** columns 16, 17, 18, or 19. For side and rear exposures from all earth covered igloos acting as a PES, use **Table 3.12.**

58. Use **Table 3.13.**, IM and IL column.

59. Use **Table 3.13.**, PTR and IB column.

60. For sparsely populated locations, reduce the minimum 1,250-foot fragment distance to 900 feet [270 meters (m)] if the PES does not exceed 11,400 pounds (5,140 kg). Allow no more than 25 persons in any sector bounded by the sides of a 45 degree angle, with the vertex at the PES, and the 900 feet (270 m) and 1,250 feet (380 m) arcs from the PES. See **Figure 3.1.**

61. When required, reduce specific distances for certain exposures. Testing proved there is attenuation of the airblast overpressures from the sides and rear of earth-covered igloos compared to an unconfined surface burst. Some slight overpressure increase occurs at the front. Compute intraline distances from earth-covered igloos from **Table 3.4.** Interpolation formulas in the notes for **Table 3.6.** may be used for explosives weights not listed in these tables. The barricaded columns of **Table 3.4.** can only be used for ES authorized K-9 separation in note 6. The provisions of this note do not apply when the ES is a military only taxiway or runway.

62. Use the following table to determine Q-D from a US Third-generation Hardened Aircraft Shelter PES to an Unhardened ES (see note 12 above). Munitions should be separated from the Hardened Aircraft Shelter walls at a distance sufficient to eliminate local breaching. For less than 1,100 pounds, a 3-foot separation distance from the wall is sufficient. For IM distances see paragraph **3.20.**

63. Use this K factor for NEW in PES up to 250,000 pounds.

64. Use this K factor for NEW in PES above 250,000 pounds.

65. The K factor indicated will provide protection from blast overpressure. Barricades are required if protection from low angle, high velocity fragments is desired.

66. Use Runway, Airfield Military Use Only, criteria for End-of-Runway and Dearm Crew shelters (see paragraph **3.13.4.**).

67. Intraline is the minimum distance between separate groups of explosives loaded combat configured aircraft or between aircraft and a pre-load or site that serves to support aircraft. Integrated Combat Turn (ICT) operations using either live or inert munitions are considered a Combat Aircraft Parking Area and must be sited according to procedures in **Chapter 4**, **Section 4A**. All aircraft undergoing Hot Pit refueling are considered to be in transportation mode and are exempt from Q-D requirements as a PES.

68. The K factor indicated will provide IM protection only. K30 is required if blast overpressure protection is desired.

69. An 80-foot minimum distance is advisory, but not mandatory.

70. All hazard class/division (HC/D) 1.1 material, regardless of specific known fragment distances, will drive HAS inhabited building (IB) clear zones based on the specific HAS Q-D criteria and the maximum credible event (MCE) for the shelter. For example, 2,500 pounds of HC/D (14)1.1 material in a 3rd Generation HAS would require K62 (841 feet) from the sides, K50 (679 feet) from the front, and K40 (543 feet) from the rear. This guidance is predicated on the mass detonating characteristics of HC/D 1.1 material and the demonstrated effects of a HC/D 1.1 event in a HAS.

71. Reserved for future use.

72. If a specific facility is not listed in **Table 3.3.**, see **Section 3C**--*Q-D Criteria For Specific Facilities or Situations,* for the applicable criteria.

73. Reserved for future use.

74. For open/light PES locations: HC/D 1.2.3 IMD from a PES containing HD 1.2.3 items to an ES containing other than HC/D 1.2.3 is K11 (50’ min) based on the NEWQD of a single round of the largest (greatest NEWQD) HC/D 1.2.3 item in the PES. For an ES containing only HC/D 1.2.3 items, the IMD from any PES to such an ES is 50 feet. For heavy structures: 50 feet is the required IMD to PES exposures. See **Table 3.12.** for igloo-to-igloo side/rear orientations. A heavy structure is defined as a structure

with a wall thickness ≥12 inches of reinforced concrete (18.7 inches brick); a roof thickness ≥5.9 inches of reinforced concrete and a barricade between the door and any PES, constructed for protection against high-speed, low-angle fragments (i.e., an earth-covered magazine with a barricaded front). See **Table 3.13.**, Note 7 for IL/PTR/IB guidance.

75. If the ES is a hardened aboveground, non earth-covered structure, apply only a 50' minimum for all quantities and sub-divisions of HC/D 1.2. A hardened structure for this purpose is a buildings with wall thickness ≥12 inches of reinforced concrete (18.7 inches brick); a roof thickness >5.9 inches of reinforced concrete and a barricade between the door and any PES, constructed for protection against high-speed, low-angle fragments according to paragraph **3.12.1.**

76. See paragraph **2.82.** for personnel protection guidance. Remotely controlled operations must be terminated when operating personnel must perform duties at less than PTR from a remotely controlled operation, or when fragmentation protection and PTR separation is no longer provided. This should be documented in local procedures.

77. When stored in structures that may contribute to the debris hazard, the IB, PTR and IL for items whose MCE is greater than 31 pounds is determined by using the larger of the following two distances: those given in **Table 3.8.** for the appropriate Explosive Weight or those given in **Table 3.9.** for the appropriate MCE. Explosives in any building are assumed to create building debris unless an engineering analysis shows fragments will not go beyond a lesser distance.

78. See paragraph **2.41.**, *Multicube or Segregated Magazines,* for special considerations when storing limited amounts of explosives.

79. Consider parked aeroclub aircraft as non-military aircraft for Q-D purposes.

80. (Delete this note)

Table 3.4. Factors for Computing IL from Igloos.

Exposure	NEW Range (lbs.)	K-FACTOR Barricaded	K-FACTOR Unbarricaded
Front	1 - 300K	10	18
	300K - 500K	10 - 9	18
Side	1 - 300K	7	16
	300K - 400K	7 - 9	16 – 18
	Over 400K	9	18
Rear	1 - 100K	6	12
	100K - 300K	6	12 – 14
	300K - 400K	6-9	14 – 18
	Over 400	9	18

Table 3.5. Quantity-Distance for 3rd Generation HAS to Unhardened ES.

NEW (Pounds)	FRONT (IB/PTR/IL)	SIDES (IB/PTR/IL)	REAR (IB/PTR/IL)
0 - 5	50’	50’	50’
6 - 500	230’	50’	50’
501 - 1100	230’	395’	165’
1101-11000	IB=K50 PTR=K26 Min 300’ IL=K18 Min 300’	IB=K62 PTR=K32 Min 395’ IL=K22 Min 395’	IB=K40 PTR=K20 Min 300’ IL=K14 Min 300’

Table 3.8. Hazard Sub-Division 1.2.1 Quantity-Distances (IB, PTR, IL)[8,9] For Munitions With NEWQD > 1.60 Pounds. [7]

Explosive Weight (1)	Inhabited Building Distance (2)(3)(4)	Public Traffic Route Distance (5)	Intraline Distance (6)	Explosive Weight (1)	Inhabited Building Distance (2)(3)(4)	Public Traffic Route Distance (5)	Intraline Distance (6)
				7,000	1033	620	372
2	200	200	200	8,000	1055	633	380
5	200	200	200	9,000	1074	644	386
10	200	200	200	10,000	1090	654	392
20	200	200	200	15,000	1154	692	415
40	200	200	200	20,000	1198	719	431
60	200	200	200	25,000	1232	739	444
80	224	200	200	30,000	1260	756	453
100	268	200	200	40,000	1302	781	469
150	348	209	200	50,000	1335	801	481
200	404	242	200	60,000	1361	817	490
300	481	289	200	70,000	1383	830	498
400	535	321	200	80,000	1402	841	505
600	610	366	219	90,000	1419	851	511
800	662	397	238	100,000	1433	860	516
1,000	702	421	253	150,000	1489	893	536
1,500	774	464	278	200,000	1528	917	550
2,000	824	494	296	250,000	1557	934	561
2,500	862	517	310	300,000	1581	949	569
3,000	893	536	321	350,000	1601	961	576
3,500	919	551	331	400,000	1618	971	582
4,000	941	565	339	450,000	1633	980	588
5,000	978	587	352	500,000	1646	988	593
6,000	1008	605	363				

NOTES:

1. Explosive Weight = Number of Items x NEWQD.

2. IB = -735.186 + [237.559 x (ln(number of items x NEWQD))] – [4.274 x (ln(number of items x NEWQD))^2] IB in feet, NEWQD in pounds; ln is natural logarithm, with a minimum of 200 feet.

3. Number of items x NEWQD = exp[27.791-(600.392-0.234 x IB)$^{1\backslash 2}$]. IB in feet; NEWQD in pounds; exp(x) is e^x.

4. Use of equations given in Note 2 and 3 to determine IB/weight combinations is allowed.

5. PTR = 60% of IB with a minimum of 200 feet.

6. ILD = 36% of IB with a minimum of 200 feet.

7. When stored in structures which may contribute to the debris hazard, the IB for items whose MCE is greater than 31 pounds is determined by using the larger of the following two distances: those given in this table for the appropriate Explosive Weight or those given in **Table 3.9.** for the appropriate MCE. Explosives in any building are assumed to create building debris unless an engineering analysis shows fragments will not go beyond a lesser distance.

8. For IM criteria, see **Table 3.3.**, Columns 16 & 17, Rows 1-7 and 11-14.

9. See **Table 3.12.** for side and rear exposures of igloos.

Table 3.10. Hazard Sub-Division 1.2.2 Quantity Distances (IB,PTR,IL)[7,8] For Munitions with NEWQD ≤ 1.6 Pounds.

Explosive Weight (1)	Inhabited Building Distance (2)(3)(4)	Public Traffic Route Distance (5)	Intraline Distance (6)	Explosive Weight (1)	Inhabited Building Distance (2)(3)(4)	Public Traffic Route Distance (5)	Intraline Distance (6)
1	100	100	100	7,000	366	220	132
2	100	100	100	8,000	376	226	135
5	100	100	100	9,000	385	231	139
10	100	100	100	10,000	394	236	142
20	100	100	100	15,000	427	256	154
40	113	100	100	20,000	451	271	162
60	123	100	100	25,000	471	282	169
80	131	100	100	30,000	487	292	175
100	138	100	100	40,000	514	308	185
150	152	100	100	50,000	535	321	193
200	162	100	100	60,000	553	332	199
300	179	107	100	70,000	568	341	204
400	192	115	100	80,000	581	349	209
600	211	127	100	90,000	593	356	214
800	226	136	100	100,000	604	362	217
1,000	238	143	100	150,000	647	388	233
1,500	262	157	100	200,000	678	407	244
2,000	279	168	101	250,000	703	422	253
2,500	294	176	106	300,000	723	434	260
3,000	306	183	110	350,000	741	445	267
3,500	316	190	114	400,000	757	454	272
4,000	325	195	117	450,000	771	462	277
5,000	341	205	123	500,000	783	470	282
6,000	355	213	128				

Table 3.11. (Delete this table) **Reserved For Future Use.**

Table 3.12. Hazard Class Division 1.2 Separation Distances From Side and Rear Exposures of All Igloos.[1]

Category	HC/D 1.2.1 MCE ≥100 pounds	HC/D1.2.1 MCE <100 pounds	HC/D 1.2.2	HC/D 1.2.3
Intermagazine[2] Distance	50’	50’	50’	50’
Intraline[2] Distance	50’	50’	50’	50’ MIN (3)
Public Traffic Route Distance	300’	200’	100’	50’ MIN (3)
Inhabited Building Distance	300’	200’	100’	50’ MIN (3)

Notes:

1. For front exposures from all igloos acting as a PES, use **Table 3.3.**, columns 16, 17, 18 or 19, as applicable.

2. No separation is required to other side/rear igloo exposures.

3. See **Table 3.13.**, Note 7.

Table 3.13. Hazard/Class Division 1.3 and 1.2.3 Separation Distances. (1) (2)(4)(7)(8)(9)

Notes:

1. For quantities less than 1,000 lbs, the required distances are those specified for 1,000 lbs. The use of lesser distances may be approved when supported by test data and/or analysis. Linear interpolation of NEW quantities between table entries is permitted. For quantities above 1,000,000 lbs, the values given above will be extrapolated by means of cube-root scaling as follows:

a. For inhabited building distance (IB) and public traffic route (PTR) distance, use $D = 8\ W^{1/3}$.

b. For aboveground intermagazine distance (IM) and intraline distance (IL), use $D = 5\ W^{1/3}$.

2. List of items (examples only): Military pyrotechnics; solid propellants in bulk, in containers, or in ammunition items; and nontoxic chemical ammunition.

3. Items will be placed in this hazard division if they qualify for assignment to it after evaluation in accordance with **Chapter 2**.

4. For reasons of operational necessity, limited quantities of items in this hazard division, such as document destroyers, signaling devices, riot control munitions and the like, may be stored without regard to quantity-distance in accordance with fire protection regulations in facilities such as hangars, arms rooms, and operating buildings.

5. The same distances are used for IB and PTR.

6. The same distances are used for aboveground IM and IL. Earth-covered buildings may be used to their physical capacity for this hazard division provided they comply with the construction and siting requirements of **Chapter 3** for HC/D 1.1. Earth-covered magazines used to store only HC/D 1.3 items must be sited for a minimum of 100 lbs of HC/D 1.1 item.

7. The IBD for Unit Risk HC/D 1.2.3 is determined by using **Table 3.13.** (Hazard Class Division 1.3 and 1.2.3 Separation Distances) for the NEWQD of the HD 1.2.3 item multiplied by the number of rounds present, but with a minimum IBD determined as follows: If the items are in a structure that can interrupt primary fragments and can contribute debris, the minimum IBD is the hazardous debris distance given in **Table 3.9.** for an MCE equal to the NEWQD of a single round. If the items are in the open or in a light structure that will not interrupt primary fragments, the minimum IBD is the hazardous primary fragment distance based on the HD 1.1 hazardous fragment area number density criteria applied to a single HD 1.2.3 item. The hazardous fragment distance applicable to items in the open is specified in hundreds of feet in parentheses as "(xx) 1.2.3." PTR for HD 1.2.3 is equal to 60% of IBD. ILD is computed as 36% of IBD, with a minimum distance equal to the Intermagazine Distance (IMD). See **Table 3.3.**, column 19 for IMD guidance.

8. See paragraph **2.41.**, *Multicube or Segregated Magazines,* for special considerations when storing limited amounts of explosives.

9. See **Table 3.12.** for side and rear exposures of igloos (HC/D 1.2.3 only).

Table 3.18. Separation Distances for Missiles in Aircraft Shelters.

Note 9. (Delete this note)

Figure 3.7. F-15 Aircraft Criteria.

Note: IM or IL criteria for the internal HC/D 1.2 gun ammunition and internal HC/D 1.3 flares do not need to be considered with these loads. The AIM-120s shown are for the 16.9 pound warhead only. AIM-120 models C4/C5 have 19 pound warheads and will require new missile configuration requests in accordance with paragraph **3.35.4.**

Figure 3.8. F-16 Aircraft Criteria.

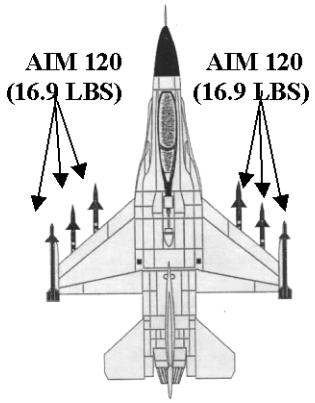

F-16
CONFIG: 3
NEW: 16.9
IM: 29' IL: 47'
IBD: 500'
PTR: 300'

Note: IM or IL criteria for the internal HC/D 1.2 gun ammunition and internal HC/D 1.3 flares do not need to be considered with these loads. The AIM-120s shown are for the 16.9 pound warhead only. AIM-120 models C4/C5 have 19 pound warheads and will require new missile configuration requests in accordance with paragraph **3.35.4.**

Table 3.26. Minimum Distances for Specific Items and Situations.

Line	Item/Situation	Quantity of Explosives	Required Distance (Feet)		
			IB (NOTE)	PTR (NOTE)	IL (NOTE)
1	Above ground storage of demolition explosives, thin cased low fragmentation munitions and in-process explosives	<100 lbs NEWQD	(1)	(1)	(6)
1.1	Above ground storage – all HC/D 1.1 munitions and explosives	100-450 lbs NEWQD	(1)	(9) (1)	(6)
1.2		451- 11,400 lbs NEWQD	900 (2)	750	(6)
1.3		11,400-30,500 lbs NEWQD(2)	1250 (1)	750 (2)	(6)
2	Earth covered igloos – all HC/D 1.1 munitions and explosives	1-150 lbs NEWQD	500 front 250 side/rear	300 front 150 side/rear	(8)
2.1		151-450 lbs NEWQD	700 front 250 side/rear	420 front 150 side/rear	(7) (8)
2.2	For ECMs < 26’ x 60’	451-11,400 lbs NEWQD (2)	900	750	(7) (8)
2.3	For ECMs ≥ 26’ x 60’	451-17,000 lbs NEWQD (2)	900	750	(7)(8)
3	Locations where structures, blast mats, and personnel shielding will completely confine fragments and debris (for igloos see line 2)	50 lbs NEWQD or less	K40/50	K24/30	(6)
4	Explosives detector dog training in facilities or buildings	7 lbs NEWQD or less dispersed in structure	100 (4)	100 (4)	50
5	Explosives detector dog training Security Police Academy, Lackland AFB TX	10 lbs NEWQD or less dispersed in structure	100	100	50
6	2.75” rockets having 4-in. parallel and vertical separation	All quantities (AUR)	400	240	50 (7)
6.1	2.75” rockets stored and maintained in RSCA buildings (5)	All quantities	0	0	0
7 7.1	AIM-7 series AUR missiles with other than WAU-17 warhead. Single missiles separated according to paragraph **3.34.1.**	All quantities	700	420	(6) (7)
7.2	Packed in AUR containers - igloo storage only	All quantities	500 front 250 side/rear (3)	300 front 150 side/rear (3)	(8)
7.3	Packed in AUR containers - Facilities with aboveground magazines other than igloos	All quantities	700	420	(6) (7)
8	AIM-7 Series AUR missiles with WAU-17 in igloo storage only				
8.1	Alternately stacked containers (according to paragraph **3.34.3.**) and trailers not in radial alignment	All quantities	500 front 250 side/rear (3)	300 front 150 side/rear (3)	(8)

Line	Item/Situation	Quantity of Explosives	Required Distance (Feet)		
			IB (NOTE)	PTR (NOTE)	IL (NOTE)
8.2	Alternately stacked containers (according to paragraph 3.34.3.) and no more than 3 trailers in radial alignment	All quantities	700 Front 250 Side/Rear	420 Front 150 Side/Rear	(8)
8.3	More than 3 trailers in radial alignment, or storage with other AIM-7 or AIM-9 missiles	MCE = total warheads in igloo (11)	Same as line 2 above	Same as line 2 above	Same as line 2 above
9	AIM-7 AUR (not WAU-17) on trailer with or without other AIM-7 (not WAU-17) or 9 missiles stored in igloos	Total quantity of all warheads radially aligned (10)	Same as line 2 above	Same as line 2 above	(8)
10	AIM-7 AUR (not WAU-17) on trailer with other AIM-7 missiles (not WAU-17) not stored in igloos	2-24 warheads radially aligned	700	420	(6) (7)
11					
12	AIM 7 missiles (not WAU-17) stored in facilities other than igloos	MCE - 100 lbs or less	700	400	(6)
13	Single AIM-9 series missiles, separated according to paragraph 3.34.6., in the open	All quantities	400	240	50 (3)
14	MK 82 GP bomb in the open	1 bomb	670	400	(6)(7)
15	M117 GP bomb in the open	1 bomb	690	415	(6)(7)

NOTES:

1. Incremental K40 (IB) or K24 (PTR) may be used when fragments or building debris are not involved. When fragments or building debris are involved see **Table 3.9.** HC/D 1.2 munitions and HC/D 1.1 munitions with a fragment hazard number assigned are considered high fragmenting munitions. Explosives in any building are assumed to create building debris unless an engineering analysis shows fragments will not go beyond a lesser distance. When in doubt, contact HQ AFSC/SEW, Kirtland AFB.

2. For sparsely populated locations, reduce the minimum 1,250-foot fragment distance to 900 feet [270 meters (m)] if the PES does not exceed 11,400 pounds (5,140 kg) for ECMs <26’ x 60’, or 17,000 pounds (7711 kg) for ECMs ≥ 26’ x 60’. Allow no more than 25 persons in any sector bounded by the sides of a 45 degree angle, with the vertex at the PES, and the 900 feet (270 m) and 1,250 feet (380 m) arcs from the PES. See **Figure 3.1.**

3. Missile fragments are contained, therefore, since only the contents of one container will react, the secondary igloo debris distances apply.

4. Nonessential personnel will be evacuated a minimum of 100 feet during training exercises.

5. RSCA buildings must have at least 3/8” steel doors. Rockets must face a 12” wall.

6. See **Table 3.9.**

7. Does not provide protection against fragments.

8. Use K18 from front, K16 from sides, K12 from rear for MCE, minimum 50 feet (less distance may be used when structures, blast mats and the like can completely contain fragment and debris).

9. Calculate PTR as 60 percent of IB.

10. NEWQD for missiles in radial alignment need to be totaled only if warheads are separated by less than 100 inches.

11. A lesser MCE may be used if approved by AFSC/SEW.

Table 3.27. Quantity Distance Criteria For Non-DoD Explosives Activities.[1,2]

Move this table to chapter one and re-designate as Table 1.1.

NOTES:

1. Non-DoD activities may be conducted only when the risk to the Air Force mission (to include any other tenant DoD mission) has been evaluated and found acceptable, and the non-DoD activities meet the criteria of 10 USC, Section 2692.

2. "Check for IM" means Air Force personnel will determine the MCE for an event as that quantity of explosives that are not separated by IM distance, or equivalent protection.

3. Explosives operations conducted by DoD, or other federal agency, under DoD oversight, procedure, and/or control and in accordance with the explosives safety standards of this manual. This term is applicable only to DoD and federal explosives operations, and to non-DoD commercial enterprises directly supporting DoD and federal explosives contractual efforts.

4. Explosives operations/storage conducted on DoD property in accordance with only this table, BATF, FAA or other federal, state, and local explosives safety requirements. Under these type operations, DoD will be responsible only for insuring IM standards are met as outlined in explosives site plan submissions. This does not constitute "DoD oversight" as intended in note 3.

5. Any space or orbital launch facility that supports both DoD and non-DoD launch services and operations, as determined by Air Force personnel or by mutual agreement when multiple DoD military services are involved.

6. DoD/non-DoD explosives storage under DoD control.

4.1.3.5 Non-DoD Explosives Activities on DoD Installations. An explosives site plan for non-DoD explosives facilities on AF installations must be prepared and submitted through AF channels for DDESB approval. These site plans will identify any explosives safety risk to Government assets within or outside of the non-DoD facility explosives Q-D arc. DDESB site approval for non-DoD operations and non-DoD storage will be limited to a "foot print" only (data that determines the IBD arc). Building design, lightning protection, etc., will not be included unless it is used to determine the IBD arc. Approval of the explosives site plan is only one of a series of approvals that must be granted by Government organizations to allow a non-DoD explosives activity onto an AF installation. The responsible commander must sign all explosives site plans prior to submittal to higher headquarters. The responsible commander must make a safety risk assessment concerning the possible loss/damage to any exposed Government facility/hardware based on current DoD mission requirements, future use of the facility by DoD components, range safety criteria, and any other pertinent data such as probability of occurrence of an explosives incident and time of expo-

sure of Government assets as applicable. Non-DoD user insurance coverage for Government assets will not, by itself, be adequate justification for a non-DoD explosives activity to expose a Government facility to an unacceptable risk. See Table 3.27 for Q-D criteria for non-DoD explosives activities and para **5.2.8.** for guidance on waivers, deviations, and exemptions.

4.3.1.2. ESPs for war plan operations are forwarded from the installation level through command safety channels to the MAJCOM/CC/CV for approval. Information copies will be sent to AFSC/SEW for review (to determine proper application of Q-D standards). However, if the ESP involves new construction (either for an ES or PES), it will be forwarded from the installation level through command safety channels to the Air Force Safety Center/SEW. After review by AFSC/SEW (to determine proper application of Q-D standards), the ESP will be endorsed by AFSC/SEW to the DDESB for approval. The MAJCOM may choose to combine day-to-day and war plan operations into a single ESP (e.g. using tiered siting); these ESPs will be approved according to paragraph **4.3.1.1.**

4.3.1.3. During MOOTW/contingency/combat operations, the installation will engage in the process of explosives site planning to ensure Q-D standards are met. The Q-D standards of DOD 6055.9-STD, Chapter 10, may be used if Q-D standards of this manual (or other Service criteria if designated by Combatant Command procedures) cannot be met. An ESP should be prepared as soon as possible and approved in accordance with Combatant Command procedures. If a MOOTW/ contingency/combat operation is projected to last longer than 12 months, the ESP will be forwarded through command safety channels to the Air Force Safety Center prior to the 12-month mark. After review by AFSC/SEW (to determine proper application of Q-D standards), the ESP is endorsed to the DDESB for approval.

4.3.2. Tenant units forward ESPs through the host installation and command safety channels. In cases where the host exposes a tenant facility, the host MAJCOM will obtain agreement of the tenant MAJCOM before processing the site plan. When a US Air Force unit is tenant on an Army, Navy or Marine base, request formal site plan approval through that service. The site plan must meet the Q-D requirements of this regulation in addition to all host agency criteria. Submit an information copy of the site plan request through command safety channels to HQ AFSC/SEW.

4.3.2.1. Inter-service Installation Coordination. In cases where an Air Force PES generates an explosives IBD clear zone encroaching onto an adjacent DoD services installation, the local Air Force wing responsible for submitting the site plan will obtain written acknowledgement from the exposed service component SE and CE equivalent offices for inclusion with the site plan submission package. It will be up to the acknowledging agency to update their maps to reflect the Air Force explosives clear zone for their future planning purposes. See paragraph **3.2.1.1.** for additional guidance. The MAJCOM and HQ AFSC will coordinate with the applicable service component equivalent prior to requesting DDESB site plan approval.

4.3.3. MAJCOM weapons safety staffs must review subordinate units' site plans (for day-to-day and war plan operations, and MOOTW/contingency/combat operations which exceed 12 months) for accuracy and compliance with the standards in this manual. MAJCOMs will then submit original and one copy of the ESP to HQ AFSC/SEW. Include a MAJCOM safety endorsement stating approval along with any changes, modifications or specific precautionary measures considered necessary.

4.6.2. Vehicle inspection stations, and transportation change of mode operations to include roll on/off operations not involving lifting. Off-installation MILVAN/ISO container transfer involving highway and rail modes only, where containers are not stored and no other operations are performed, do not require site plans.

4.7. Facility Modifications or Change in Use. Existing facilities may be modified as needed to meet changing mission requirements. If the modification increases the required quantity-distance separation, or increases the overall floor space, such as room additions, an ESP is required (except during the first 12 months of a MOOTW/contingency/combat operation). MAJCOM and unit safety staffs must work closely with civil engineers and users, to ensure safety standards are not compromised. The following rules apply to these modifications:

4.10.4. Submitting Tiered Explosives Site Plans. Use the general guidance in paragraph **4.11.2.** when submitting tiered sited plans. Use the maximum proposed explosives quantities for preparing the PES/ES paired relationship listing required in paragraph **4.11.5.6.** Specify the document used in paragraph **4.10.3.** above, it is not necessary to include it in the site plan. Assign a separate site plan number for each tier in accordance with **Attachment 4**, paragraph **A4.2.1.4.**

4.11.4.5.1. Lightning protection system drawings must include a top view of the facility showing the locations of the elements of the lightning protection system, such as air terminals, masts, overhead wires, grounding electrode system and a description of the surge protection. Include at least a front and side view of the facility showing the zone of protection required by NFPA 780, Section K (100 feet rolling sphere), unless the rebar in an igloo is used as part of the lightning protection system. Provide additional views, as necessary, after considering all possible placements of the rolling sphere concept. The drawings must contain dimensions. Drawings should show that the lightning protection system meets the 100-foot striking distance criteria (except for igloos where the rebar is used in lieu of air terminals). Include documentation of the commander's risk acceptance for submissions involving LPS exceptions (see paragraph **2.54.1.8.**).

5.2.8. Waivers, deviations, and exemptions for non-DoD explosives activities on DoD installations. Waivers, deviations, and exemptions to AF explosives safety requirements of this manual will not be granted to non-DoD user explosives site plans for explosives facilities. Rather the site plan will: (1) Clearly specify situations where non-compliance with explosives safety requirements exist; (2) Include a risk acknowledgement letter by the non-DoD user; (3) Include the necessary operating restrictions to ensure that Government owned flight hardware, facilities, or other resources will not be hazarded by the non-compliance(s) to a level unacceptable to the owner of the assets; and (4) Include a recommendation for approval/disapproval of the site plan from the local AF explosives safety office with supporting rationale, and obtain the coordination of the non-DoD user on the explosives site plan prior to submittal to higher headquarters.

5.3.1. Exemptions and Waivers. All planned construction in support of day-to-day and war plan operations, and MOOTW/contingency/combat operations exceeding 12 months, not meeting Q-D standards, must be approved by the Secretary of the Air Force (SAF). Additionally, an action which places an existing facility that was constructed within the past three years at less than prescribed distances from a PES requires SAF approval. The Air Force Chief of Safety may deviate from this requirement on a case-by-case basis. Approval level of all other exceptions for day-to-day and war plan operations, and MOOTW/contingency/combat operations exceeding 12 months, will be based on the level of risk assumed by the specific hazard. Risk-based approval levels range from SAF/MI down to Numbered Air Force commander level. As specified in **Figure 5.1.** and **Figure 5.2.**, NAF commanders may delegate approval authority for the lowest levels of risk to wing commanders or equivalent. Approval level of waivers for MOOTW/contingency/combat operations less than 12 months in length will be determined by the Combatant Command. Also see **Table 5.4.** for approval levels.

5.4.2. Approval Levels for Reviews. Exceptions will be reviewed at the original approval level unless units elect to apply risk-based criteria to existing exceptions approved under the previous methodology. If

the PES or ES data identified in an exception package changes, apply risk-based criteria to determine the appropriate level for review. Also see **Table 5.4.** for approval levels.

Table 5.4. Q-D Exception Approval Levels

IF	AND	THEN
No current exemption	Change causes exemption to facilities constructed within the past 3 years	SAF-approval required
No current exemption	Change causes exemption to facilities not constructed within the past 3 years	Apply nomograph
SAF-approved exemption for new construction	Change causes increased risk within 3 years of construction	SAF-approval required
SAF-approved exemption for new construction	Periodic review within 3 years of construction	SAF-approval required
SAF-approved exemption for new construction	Change causes increased/ decreased risk more than 3 years after construction	Apply nomograph
SAF-approved exemption for new construction	Periodic review more than 3 years after construction	Apply nomograph
SAF-approved exemption not involving new construction, approved prior to use of nomograph	Change causes increased/ decreased risk	Apply nomograph
SAF-approved exemption not involving new construction, approved prior to use of nomograph	Periodic review	Apply nomograph
SAF-approved exemption not involving new construction, SAF-approval driven by application of the nomograph	Change causes increased/ decreased risk	Apply nomograph
SAF-approved exemption not involving new construction, SAF-approval driven by application of the nomograph	Periodic review	Apply nomograph

6.8.3.4.5. Clearance procedures to be used and an assessment depth chart.

Attachment 1

GLOSSARY OF ABBREVIATIONS, ACRONYMS, AND TERMS

Combat Aircraft Parking Area. An aircraft parking area meeting both explosives safety and airfield criteria.

Designated Aircraft Parking Area. An aircraft parking area meeting airfield parking criteria.

DoD Explosives Safety Board (DDESB). The DoD organization charged with promulgation of ammunition and explosives safety policy and standards, and with reporting on the effectiveness of the implementation of such policy and standards.

DoD Operations/Storage. Explosives operations conducted by DoD, or other federal agency, under DoD oversight, procedure, or control and in accordance with the explosives safety standards of DoD 6055.9-STD. This term is applicable only to DoD and federal explosives operations, and to non-DoD commercial enterprises directly supporting DoD and federal explosives contractual efforts.

Earth-Covered Magazine.

Box-type A magazines constructed according to NAVFAC drawings 1404000 through 1404007 and box-type B magazines constructed according to NAVFAC drawings 1404018 through 1404025.

Explosives Safety. A condition where operational capability, personnel, property, and the environment are protected from the unacceptable effects of an ammunition or explosives mishap.

Explosives Safety Management. A process of risk management, consisting of policies, procedures, and engineering controls, that reduces the probability and the consequences of an ammunition or explosives mishap.

Explosives Site Plan. Package consisting of all information necessary to assess compliance with explosives safety standards (especially quantity-distance standards) for an explosives storage or operating location. Once approved, this package identifies storage and operational limitations, and provides a tool for management of risks associated with the storage or operating location. Note: An ESP can also be prepared for a non-explosives exposed site.

Explosives Sited Combat Aircraft Parking Area. An aircraft parking area meeting both explosives safety and airfield criteria.

Fragmenting Munitions. Items having cases designed to fragment in a specified manner. Examples include continuous rod warheads, items with scored cases and items containing pre-formed fragments. Items fitting this definition are usually air-to-air missile warheads such as the Sparrow, Sidewinder, and AMRAAM.

Improvised Explosive Device (IED). A device placed or fabricated in an improvised manner incorporating destructive, lethal, noxious, pyrotechnic or incendiary chemicals, designed to destroy, disfigure, distract or harass. It may incorporate military stores, but are normally devised from non-military components.

Installed Explosives. Explosives items installed on aircraft or contained in survival and rescue kits such as flares, signals, egress system components, squibs, and detonators for jettisoning external stores,

engine-starter cartridges, fire extinguisher cartridges, destructors in electronic equipment, explosives components of emergency equipment, and other such items or materials necessary for safe flight operations.

Joint Storage. DoD/non-DoD explosives storage under DoD control.

Mishap. An accident or an unexpected event involving DoD ammunition and explosives.

Non-DoD Operations/Storage. Explosives operations/storage conducted on DoD property in accordance with **Table 1.1.**, BATF, FAA or other federal, state, and local explosives safety requirements. Under these type operations, DoD will be responsible only for insuring IM standards are met as outlined in explosives site plan submissions. This does not constitute "DoD oversight" as intended in the definition of "DoD Operations/Storage."

Non-Robust Munitions. Those items not meeting the definition of Robust or Fragmenting munitions. Examples include torpedo warheads, underwater mines, most CBUs, TOW, Hellfire, and Stinger missiles.

Robust Munitions. These are munitions meeting two of the following three criteria: (1) have a ratio of the explosive weight to empty case weight less than 1.00; (2) have a nominal wall thickness of at least 0.4 inches; and (3) have a case thickness/NEW $^{1/3}$ >0.05in/lb $^{1/3}$. The following cartridges are, by definition, robust: 20, 25, and 30 mm. Other examples of robust ammunition include MK80 series bombs, M107 projectiles, Tomahawk and Harpoon penetration warheads.

Shared Launch Facility. Any space or orbital launch facility supporting both DoD and non-DoD launch services and operations, as determined by AFSC or by mutual agreement when multiple DoD military services are involved.

HOW TO COMPLETE AF FORM 943, EXPLOSIVES SITE PLAN

A4.1. Form Purpose: Use this form to describe the quantity-distance relationships when siting a new PES or non-explosive ES (at less than IBD), updating a previous siting action or submission of explosive waivers and exemptions. (See Figure A4.1*, AF Form 943*). If additional space is needed to explain any information required on this form, use the transmittal letter (for example, a referenced action number, requested exception expiration dates, etc.).

A4.2.1. Action Number. Use a four part number as follows to identify the action.

A4.2.1.2. The base or location where the action is located (for example, HILL, RAMSTEIN, LOGAN, etc.).

A4.2.1.3. Calendar year designation (99, 00, 01).

A4.2.1.4. An (S) identifier for the site plan request followed by a sequence number (1 through 999). Number each request sequentially for each calendar year. For example, the first site plan for the year would be S1. If more than one PES is included in the request, include an identifier for each. For example; S4, S5, or S6. Canceled requests will not affect the numbering of subsequent requests. For example, if site plan USAFE-RAMSTEIN 99-S10 was canceled, the next siting submitted for Ramstein AB in 1999 would be 99-S11. If the siting involves Q-D exceptions, include the statement, "WITH EXCEPTIONS" immediately following the site plan identification number. Detail the exceptions in Section III.

A4.2.3. (Delete this paragraph)

A4.2.4. (Delete this paragraph)

A4.2.5. (Delete this paragraph)

A4.3.1.2. Column 2. First line: Describe, using the descriptions in **Table 3.3.** the type of facility or location being sited. For example: Earth-covered magazine, 7 Bar. State the facility/operation being sited has a barricade if it affects Q-D.

Fourth Line: Show the total number of people (M for Military or DoD Civilian, C for Non-DoD Civilian and FN for Foreign Nationals) normally assigned to the location. Do not include casuals such as inspectors or quality control evaluators.

A4.3.1.3. Column 3. Show the proposed NEWQD for the new or updated PES, or the previously approved weights for existing sites being updated. List all hazard classes (*Exception:* HC/D 1.2.3, 1.5 and 1.6 may be omitted unless quantities are to be sited). If no explosives in a particular hazard class will be sited, type "None". The explosive authorization must always show the sited, waived, or exempted weights, whichever is greater. Type "None" for each HC/D for non-explosives sitings. For multiple room or bay facilities, show the NEWQD for each room or bay. For HC/D 1.1, 1.2.1, 1.2.2, 1.2.3, and 1.3 show a number; for HC/D 1.4 show "Capacity or op limit". The proposed NEWQD should reflect the mission need or physical capacity not necessarily what the distance will allow. Even though a facility may be sited for physical capacity, store only minimum essential quantities required for the current mission.

A4.3.1.4. Column 4. Show all class/divisions categories regardless if there will be an amount sited (Exception: HC/D 1.2.3, 1.5, and 1.6 may be omitted unless quantities are to be sited). List separately for each room or bay as applicable.

A4.4. PES/ES Information: Use this section to describe the most restrictive Q-D relationship between the proposed siting and other exposed sites (ES) or potential explosion sites (PES) for each Hazard Class/Division. As a minimum, when siting a PES show all exposures within IBD. In addition, when siting a non-explosive ES show all PESs which are within the evaluation zone (EZ) of the ES. When the EZ for a PES being sited exceeds that of the IBD, show only the PESs between the IBD and EZ. The evaluation zone (see glossary) is based on the Q-D type of the ES, e.g. Operating Location, Combat Aircraft Parking Area and the applicable K Factor or minimum distances of HC/Ds in the PES. See **Figure 4.1.** Use the largest amount of NEWQD or MCE as applicable for each HC/D authorized on the base to determine the size of the EZ.

A4.4.1. Columns 5 through 8. Same data elements as shown for columns 1 through 4. For exposures requiring only 50' min or no QD separation distance, use one line entry. If exceptions are involved, assign each exception a unique identification number using the format as described in paragraph **A4.2.1.** in column 6. This unique identification number will be based on the approval level. For example, use 388FW-Hill-99-W1 as the first wing level identification number for the calendar year 1999. Use ACC-Hill-99-W1 as the first MAJCOM level identification number, not W2. Subsequent site plan submissions with Q-D exceptions would use the next available exception number. For example, the next wing level exception identification action number would be 388FW-Hill-99-W2, not W1. This method will allow accurate tracking of exceptions based on the approval levels and calendar year. Annotate the identification number preceding each ES or PES with exception. Use the identifiers (W) for waivers and (E) for exemptions. Include superseded waiver or exemption identification numbers if applicable. If either the facility/operation being sited or the ES has a barricade affecting Q-D, indicate this after the facility description in Column 6. Example: Above Ground Magazine (Barricaded).

A4.4.2. Column 9. Show the actual distance from the facility listed in column 2 to facility listed in column 6. For exposures requiring only 50’ min or no QD separation distance, use one line entry.

A4.4.3. Column 10. Show the *most restrictive* (greatest) separation distance, for each class/division, looking both ways required between columns 2 and 6. For exposures requiring only 50’ min or no QD separation distance, use one line entry.

A4.5.3. Item 3. Give the reason for the request. Describe the impact if the requested action is not approved.

Figure A4.1. AF Form 943. *(**NOTE:** Document is shown representatively to illustrate use.)*

EXPLOSIVES SITE PLAN

SECTION I -- GENERAL INFORMATION

ACTION NUMBER	BASE/LOCATION	DATE
AFMC-ACC-Hill-99-S1 WITH EXCEPTIONS	Hill AFB, Utah	30 Jan 2001

SECTION II -- SITE DATA

SITE INFORMATION				PES/ES INFORMATION						
FAC NO. 1	FACILITY/OPERATION DESCRIPTION Owning Unit and No. Of People 2	SITED NEWQD 3	HC/D & MCE 4	FAC NO. 5	FACILITY/OPERATION DESCRIPTION Owning Unit and No. Of People Waiver/Exemption No.	SITED NEWQD 7	HC/D & MCE 8	DIST ACT 9	DIST REQ 10	SEP FACTOR Table 3.3 Col/Line/Note 11
999	Operating Location Bomb Build-Up Pad ACC -388FW – 10 M * Denotes the authorized IB parenthetical hazardous fragment distance and the largest single round NEWQD for Unit Risk HC/D 1.2.3 items permitted at this location.	60,000 145,526 100,000 5,000 5,000 Op Limit	1.1 1.2.1>450 1.2.2 *(14)≤450 1.3 1.4	930	Storage Magazine- AboveGround - Barricaded Bomb component storage ACC-388 MXS	6,446 3,751 500,000 70,000 70,000 Capacity	1.1 1.2.1≤202 1.2.2 *(09)≤450 1.3 1.4	335’	335’ 335’ 282’ 324’ 185’ 50’	6/8 16-17/8(77) 18/8 19/8 20/8 (58) 21/8
				Ogden Street	Public Traffic Route On-base road - Medium traffic density AFMC-375 ABW	None None None None None None	1.1 1.2.1 1.2.2 1.2.3 1.3 1.4	950’	940’ 891’ 386’ 840’ 115’ 100’	8/25 (9) 1617/25(77) 18/25 19/25 20/25(59) 21/25
				938	Operating Location 20MM/Flare/Chaff Processing ACC-388 MXS 6M	None None 10,000 5,000 5,000 Op Limit	1.1 1.2.1 1.2.2 *(03)≤450 1.3 1.4	750’	705’ 535’ 232’ 504’ 75’ 50’	8/8 16-17/8(77) 18/8 19/8 20/8 (58) 21/8
				938-A	Paint Locker ACC-388MXS	None	None	800’	50’	8/27 (36)
				950	Earth-Covered Igloo 7 Bar Dwg # 421-80-06 Side Exposure ACC-388MXS	30,000 28,118 500,000 500,000 500,000 Capacity	1.1 1.2.1>450 1.2.2 *(12)≤450 1.3 1.4	990’	498’ 50’ 50’ 50’ 400’ 100’	1/8 (61) 16/8 (57) 18/8 (57) 19/8 (57) 20/8 (58) 21/8
				5000	***388FW-Hill-99-W1*** Public Traffic Route POV Parking (Admin) ACC-388 FW **ACC-Hill-99-W1**	None None None None None None	1.1 1.2.1 1.2.2 1.2.3 1.3 1.4	920’	940’ 891’ 362’ 840’ 115’ 100’	8/25 16-7/25(77) 18/25 19/25 20/25 (59) 21/25
				5001	Inhabited Building Military Personnel Flight(MPF) ACC-388 FW 35M Defensive Fighting Position	None None None None None None	1.1 1.2.1 1.2.2 1.2.3 1.3 1.4	1000’	1566’ 1485’ 643’ 1400’ 115’ 100’	8/28 16-17 (77) 18/28 19/28 20/28 (59) 21/28
				9000	ACC-388SPS 2M	None	None	25’	0’	8/27 (36)

AF FORM 943, JAN 01 PAGE 1 OF 1 PAGE

FOR OFFICIAL USE ONLY
(Unclassified Sample)

Section III - EXEMPTION/WAIVER DATA

1. IMPACT ON MISSION IF MISHAP OCCURS

388FW-Hill-99-W1: The MPF POV parking lot requires K24 separation, but is located at K23.5 from facility 999. A maximum credible event at 9999 would not have any adverse affect on mission accomplishment since it is a POV parking lot. Some injuries/deaths may occur to personnel transiting the parking lot from flying debris and fragments. Based on the nomograph, the approval level for this exception is the NAF/CC (delegated to the wing commander). **388FW-Hill-99-W2:** The MPF requires K40 separation, but is located at K25.5 from facility 999. Facility 1255 would receive significant structural damage from blast effects approximating 20% of the replacement cost. Moderate fragment damage is expected, depending largely upon the munitions involved and its fragmentation characteristic. Personnel in the open are not expected to receive serious injuries; however some injury is expected due to fragments. Personnel in the facility may suffer serious injuries from secondary effects, such as building debris and glass breakage. Impact on the MPF's mission capability would be interrupted for approximately one month. Based on the nomograph, the approval level for this exception is the MAJCOM/CC.

2. ACTIONS TAKEN TO MINIMIZE RISK (Unusual controls, precautions, etc.) AND PROGRAMMING CONSTRUCTION ACTIONS TAKEN TO CORRECT EXCEPTIONS, RECOMMENDED ACTION FOR HIGHER HEADQUARTERS

Munitions activities will be limited to nightly operations to the maximum extent possible limiting the length of time the MPF is exposed to the potential explosion site. The amount of munitions present on the bomb build-up pad will be limited to an operational necessity and this pad will not be utilized as a storage or holding area for munitions. Munitions supervisory personnel will ensure all personnel are certified for munitions operations conducted on the pad. Safety personnel will conduct spot inspections during bomb build-up operations. Glass windows in the MPF facing the pad will have a protective film applied to minimize hazards from flying glass shards. A new MPF facility and parking lot is programmed for FY 2001, (project #01-97-007). The new facility's location is outside of any explosives clear zone and will eliminate the two quantity-distance exceptions.

3. JUSTIFICATION OR IMPACT ON MISSION IF SITE PLAN IS NOT APPROVED

New mission requirements of the 388FW predicate continuous munitions support. The proposed bomb build-up pad request and the two associated quantity-distance exceptions present the best alternative considering available land, operational requirements, and practical safety applications. There is currently no other facility space available to utilize in the interim.. The requested net explosives weights are the minimum needed to meet the new mission requirements. Relocating the MPF and its associated POV parking lot before utilizing the bomb build-up pad was not feasible due to the immediate implementation of the tasking for munitions support and the timelines needed for budgeting and relocating the MPF and parking lot. Disapproval of this request will adversely affect the 388FW's mission readiness.

SECTION IV - CERTIFICATION			
COMMANDER CONCURRENCE			
TENANT UNIT (When Applicable)			
☐ Concur	☐ Non-Concur	PRINTED OR TYPED NAME	SIGNATURE
INSTALLATION/WING			
☐ Concur	☐ Non-Concur	PRINTED OR TYPED NAME	SIGNATURE
INTERMEDIATE COMMAND/STATE ADJUTANT GENERAL (ANG only)			
☐ Concur	☐ Non-Concur	PRINTED OR TYPED NAME	SIGNATURE
MAJOR COMMAND			
☐ Concur	☐ Non-Concur	PRINTED OR TYPED NAME	SIGNATURE

AF FORM 943, JAN 01 (REVERSE) **FOR OFFICIAL USE ONLY**
(Unclassified Sample)

Attachment 10

Q-D GUIDANCE FOR ON-BASE ROADS

A10.1. In order to prevent the generation of a significant number of quantity-distance exemptions, the new DoD 6055.9-STD requirements allow the DoD components to establish procedures for assessing, documenting, and accepting the risks associated with application of Q-D criteria to on-base roads for Potential Explosion Site (PES)/on-base road relationships which existed prior to 1 Oct 00. Q-D criteria is based on the traffic density (PTR or IBD). After 1 Oct 00, any changes to a PES which increase its Q-D arc, construction of a new PES, or construction of a new on-base road, will require application of Q-D criteria to on-base roads which are traveled by personnel not involved in PES-related operations. If Q-D criteria cannot be met, the formal exemption requirements of AFMAN 91-201 must be followed.

A10.2. For those sited (DDESB- or AFSC-approved or MAJCOM baseline-approved) PES/on-base road relationships which existed prior to 1 Oct 00, we require the following risk assessment and documentation be accomplished:

A10.2.1. On a copy of the installation map, identify the following:

A10.2.1.1. All PESs having Q-D arcs (PTR or IBD based on traffic density) encompassing on-base roads traveled by personnel not involved in munitions-related operations.

A10.2.1.2. The Net Explosives Weight for Quantity-Distance (NEWQD) of the above PESs.

A10.2.1.3. The applicable Q-D arcs (PTR or IBD) of the above PESs based on the traffic density.

A10.2.1.4. The segments of the applicable on-base roads which pass through the above arcs.

A10.2.2. Perform a risk assessment of the relationships shown above in accordance with Operational Risk Management procedures. Some factors that might be considered include:

A.10.2.2.1. Operational necessity.

A.10.2.2.2. The operation being performed (e.g., static storage, maintenance, and production).

A.10.2.2.3. Operational activity cycles.

A.10.2.2.4. Alternate routes.

A.10.2.2.5. Traffic density.

A.10.2.2.6. Accident records.

A.10.2.2.7. Time interval of exposure.

A.10.2.2.8. Type and quantity of munitions in proximity to the area transited.

A.10.2.2.9. The closest distance from the area transited to the PES.

A.10.2.2.10. The need for installation-related personnel to transit the ESQD arc.

A10.2.3. Document the commander's risk acceptance through a formal memorandum. This memorandum must include the map showing the relationships for which he/she is accepting risk, a summary of the risk assessment, and a statement that the subject relationships existed as of 1 Oct 00.

A10.3. It is highly recommended that the above risk assessment and documentation be accomplished as soon as possible to accurately capture the relationships, which existed as of 1 Oct 00, and to avoid DDESB survey findings. The commander's risk acceptance and attached map must be included in amendments to site plans (for PESs which existed prior to 1 Oct 00), or referenced if previously submitted with another site plan amendment, which do not increase the Q-D arc. As stated previously, after 1 Oct 00, any changes to a PES which increase its Q-D arc, construction of a new PES, or construction of a new on-base road, will require application of Q-D criteria to on-base roads which are traveled by personnel not involved in PES-related operations.

Attachment 12 (Added-PACAF)

SAMPLE MEMORANDUM FOR ACCEPTANCE OF RISK FOR REDUCED CRITERIA IN PACAF

6 July 2001

MEMORANDUM FOR HQ AFSC/SE

FROM: PACAF/CV
25 E Street Suite G-214
Hickam AFB HI 96853-5420

SUBJECT: Acceptance of Risk for Reduced Criteria in PACAF

1. Reference: AFMAN 91-201, **Table 3.3.**, Note 30

2. In accordance with the above reference, PACAF requires the use of reduced separations at the locations identified in paragraph 3 for operational necessity. Transient risk to military aircraft movements is accepted.

3. Reduced criteria may be applied to the following locations within PACAF in accordance with AFMAN 91-201, **Table 3.3.**, Note 30:

Osan AB, Korea
Kunsan AB, Korea
Kwang Ju AB, Korea
Suwon AB, Korea
Taegu AB, Korea
Cheong Ju AB, Korea
Kadena AB, Japan
Misawa AB, Japan
Yokota AB, Japan

4. Any questions can be directed to HQ PACAF/SEW at DSN 315-449-5050 or e-mail **mailto:pacaf.sew@hickam.af.mil**.

// Signed //
LANSFORD E. TRAPP, JR., Lt General, USAF
Vice Commander

Attachment 13 (Added-PACAF)

SAMPLE MEMORANDUM FOR INTERSHELTER SEPARATION CRITERIA TO PREVENT SIMULTANEOUS DETONATION

12 July 2001

MEMORANDUM FOR HQ AFSC/SE

FROM: PACAF/CV
25 E Street Suite G-214
Hickam AFB HI 96853-5420

SUBJECT: Intershelter Separation Criteria to Prevent Simultaneous Detonation

1. References: AFMAN 91-201, paragraph **3.20.3.**, **Table 3.16.** and **Table 3.17.**

2. Some PACAF bases have limited land available for siting and constructing new hardened aircraft shelters in accordance with AFMAN 91-201, **Table 3.16.** To ensure safe operations, AFMAN 91-201 lets us use reduced planning criteria to meet mission requirements, while maintaining combat survivability. The use of AFMAN 91-201, **Table 3.17.** will ensure operational plan capabilities are maintained.

3. Aircraft survivability criteria will be applied to first, second, and third generation Hardened Aircraft Shelter sitings whenever possible in accordance with AFMAN 91-201, **Table 3.16.** When this criteria cannot be met, PACAF is authorized to use hardened aircraft shelter separations to prevent simultaneous detonation in accordance with the above references. The increased risks associated with the use of **Table 3.17.** are accepted.

4. Intershelter separation criteria to prevent simultaneous detonation may be applied only to the following locations within PACAF in accordance with AFMAN 91-201, **Table 3.17.**:

Osan AB, Korea
Kunsan AB, Korea
Kwang Ju AB, Korea
Suwon AB, Korea
Taegu AB, Korea
Cheong Ju AB, Korea

5. Any questions can be directed to HQ PACAF/SEW at DSN 315-449-5050 or e-mail **mailto:pacaf.sew@hickam.af.mil**.

// Signed //
LANSFORD E. TRAPP, JR., Lt General, USAF
Vice Commander

Attachment 14 (Added-PACAF)

SAMPLE MEMORANDUM FOR MUNITIONS STORAGE IN AUSTERE AREAS

18 July 2001

MEMORANDUM FOR HQ AFSC/SE

FROM: HQ PACAF/CV
25 E Street Suite G-214
Hickam AFB HI 96853-5420

SUBJECT: Munitions Storage in Austere Areas

1. References: AFMAN 91-201, paragraph **3.21.** and **1.4.**

2. At no time is the observance of explosives safety practices more important than when deploying and/or employing combat forces. Explosives safety is an integral part of combat survivability. Normal explosives safety standards, procedures, Quantity-Distance criteria, and methods of application in AFMAN 91-201 will apply to explosives storage areas in austere areas. The exceptions listed in AFMAN 91-201, paragraph **3.21.** are alternatives to normal criteria and may be used, if necessary, to support operational plans. The use of greater separations must be used where possible.

3. In accordance with the above references, austere area provisions for explosives storage areas are authorized for the following PACAF bases:

Osan AB, Korea
Kunsan AB, Korea
Kwang Ju AB, Korea
Suwon AB, Korea
Taegu AB, Korea
Cheong Ju AB, Korea
Sachon AB, Korea
Kimhae AB, Korea
Kadena AB, Japan

4. Any questions can be directed to HQ PACAF/SEW at DSN 315-449-5050 or e-mail **mailto:pacaf.sew@hickam.af.mil**.

// Signed //
LANSFORD E. TRAPP, JR., Lt General, USAF
Vice Commander

Attachment 15 (Added-PACAF)

SAMPLE MEMORANDUM FOR ACCEPTANCE OF RISK FOR PARKING COMBAT AIRCRAFT AT REDUCED DISTANCE CRITERIA

24 Aug 2001

MEMORANDUM FOR PACAF/SE

FROM: 7 AF/CC

SUBJECT: Acceptance of Risk for Parking Combat Aircraft at Reduced Distance Criteria

1. Due to mission requirements, Seventh Air Force (7th AF) must use the reduced distance separation for Combat Aircraft Parking Areas outlined in AFMAN 91-201, *Explosives Safety Standards*, **Table 3.3.**, Notes 22 and 23.

2. IAW AFMAN 91-201, **Table 3.3.**, Notes 22 and 23, reduced QD criteria applies to the following locations in 7th AF:

Cheong Ju AB, Korea
Kunsan AB, Korea
Kwang Ju AB, Korea
Osan AB, Korea
Suwon AB, Korea
Taegu AB, Korea

3. This decision takes into account the known consequences of parking aircraft at reduced quantity-distance (QD) requirements.

4. 7 AF point of contact is MSgt Barry Morris, 7th AF/SEW, at **mailto:barry.morris@osan.af.mil** or DSN 784-8945.

// Signed //
CHARLES R. HEFLEBOWER, Lt General, USAF
Commander, Seventh Air Force