*BY ORDER OF THE*
*SECRETARY OF THE AIR FORCE*

*AIR FORCE INSTRUCTION 10-403*

*9 MARCH 2001*

*AIR FORCE SPACE COMMAND*
*Supplement 1*

*2 JULY 2001*

*Operations*

# *DEPLOYMENT PLANNING AND EXECUTION*

**COMPLIANCE WITH THIS PUBLICATION IS MANDATORY**

---

**NOTICE:** This publication is available digitally on the Air Force Electronic Publishing WWW site at: http://afpubs.hq.af.mil.

---

OPR: HQ USAF/ILXX
(Maj Jay R. Jennings)
Supersedes AFI 10-403, 27 May 1998 and
AFPAM 10-417, 1 May 1997
**(AFSPC) AFI10-403_AFSPCSUP1, 1 Jul 98.**

Certified by: HQ USAF/ILX
(Susan A. O'Neal)
Pages: 140
Distribution: F

---

This instruction implements AFI 10-400, *Aerospace Expeditionary Force Planning*, and AFPD 10-4, *Operations Planning*. It provides the basic requirements for Air Force deployment planning and execution at all levels of command to support contingency operations. It also describes the specific requirements for pre-execution, command and control, cargo and personnel preparation, reception and in support of Air Force deployment and redeployment operations. This guidance directly supports the Installation Commander to effectively and efficiently deploy forces in support of Operational Plan, Aerospace Expeditionary Force, Military Operations Other Than War, exercises and training events. This instruction requires the collection and or maintenance of information protected by the Privacy Act of 1974. The authority to collect and or maintain the records prescribed in this instruction is Title 10, U.S.C., 8013 and F036 AF PC S, Contingency Operations Systems (COMPES). Forms affected by the Privacy Act have an appropriate Privacy Act Statement. Consult AFI 33-332, *Air Force Privacy Act Program (PA)*, for further guidance on Privacy Act Statements. Records Management: Maintain and dispose of all records created as a result of prescribed processes in this instruction in accordance with AFMAN 37-139, *Records Disposition Schedule*. Send comments and suggestions for improvements on AF Form 847, Recommendation for Change of Publication, through channels to HQ USAF/ILXX, 1030 Air Force Pentagon, Washington, DC 20330-1030.

---

**(AFSPC) The OPR for this supplement is HQ AFSPC/LGXP (MSgt David J. Collins). This supplement implements and extends the guidance of Air Force Instruction (AFI) 10-403, *Deployment Planning and Execution.* The AFI is published word-for-word without editorial review. Air Force Space Command (AFSPC) supplemental material is indicated in bold face. This supplement describes AFSPC's procedures for use in conjunction with the basic AFI. It applies to Headquarters Air Force Space Command (HQ AFSPC), its subordinate units and Air Force Reserve Command (AFRC) tenant units. Air National Guard (ANG) AFSPC-gained units include**

**geographically separated units supported by non-AFSPC-gained host wings, therefore deployment policies will be IAW installation deployment plans at those wings. The reporting requirements in this publication are exempt from licensing in accordance with AFI 33-324, *The Information Collections and Reports Management Program; Controlling Internal, Public, and Interagency Air Force Information Collections.***

*SUMMARY OF REVISIONS*

**This document is substantially revised and must be completely reviewed.**

This revision provides deployment planning and execution guidance to support the Expeditionary Aerospace Force. It supercedes Air Force Instruction 10-403, *Deployment Planning* and Air Force Pamphlet 10-417, *Deployment Management*, and provides policy and guidance on reception and redeployment operations.

**(AFSPC) This supplement incorporates changes to deployment operating procedures and establishing command procedures for deployment training and equipping as well as implementation of Logistics Module (LOGMOD), Integrated Deployment System (IDS), and Logistics Module Stand Alone (LSA) functions. It has been expanded to include the Base-Level Reception Process and Redeployment Process as well as incorporating definitive guidance in the way of Deployment Workcenter Checklists, Concept of Operations Briefing outline and Personal Readiness Folder sample formats. A bar ( | ) indicates revision from previous edition.**

**Chapter 1— FUNCTIONAL AREA RESPONSIBILITIES AND AUTHORITIES 7**

1.1. Air Force Secretariat Agencies. ..... 7

1.2. Air Staff Agencies. ..... 7

1.3. Air Force Component Commands: ..... 9

1.4. Air Force Major Commands and Direct Reporting Units: ..... 10

1.5. Installation/Base-Level Agencies: ..... 14

1.6. Squadron, Unit, and/or Tenant Unit ..... 25

1.7. Troop Commander: ..... 29

1.8. The Deployment Process Working Group: ..... 30

1.9. Reception Control Center: ..... 30

1.10. Personnel Support for Contingency Operations: ..... 32

1.11. Deployed Commander: ..... 33

**Chapter 2— DEPLOYMENT PLANNING 35**

2.1. Deployment Planning. ..... 35

2.2. The USAF War and Mobilization Plan (WMP). ..... 35

2.3. The Joint Operations Planning and Execution System (JOPES). ..... 35
2.4. Deployment Taskings: ..... 36
2.5. Logistics Plans Development and Management: ..... 37
2.6. Maintaining Manpower and Personnel Data: ..... 40
2.7. Deployment Organizational Structure. ..... 41
2.8. Deployment Control Center (DCC): ..... 41
2.9. Cargo Deployment Function (CDF): ..... 42
2.10. Personnel Deployment Function (PDF): ..... 42
2.11. Unit Deployment Control Center (UDCC): ..... 43
2.12. Developing the Deployment Operations Process. ..... 43
2.13. Developing Deployment Education Programs. ..... 44

**Chapter 3— DEPLOYMENT EXECUTION 46**

3.1. Crisis Action Planning and Execution ..... 46
3.2. Unit taskings/Warning or Alert Order Subprocess: ..... 46
3.3. Shortfall/Limiting Factors (LIMFACs): ..... 47
3.4. Execute/Deployment Order Subprocess: ..... 47
3.5. Activate Deployment Functions/Centers. ..... 49
3.6. Deployment Schedule of Events (DSOE). ..... 50
3.7. Shortfall Process During Deployment Execution: ..... 50
3.8. Managing Resources. ..... 51
3.9. Deployment Reporting. ..... 51
3.10. Reporting Deployment UTC Data to JOPES. ..... 51
3.11. Collecting and Documenting Deployment Data: ..... 51

**Chapter 4— DEPLOYMENT EXECUTION, EQUIPMENT PREPARATION REQUIREMENTS 53**

4.1. Equipment/Cargo Preparation: ..... 53
4.2. Identify & Prepare Equipment and Cargo. ..... 53
4.3. Equipment/Cargo Documentation. ..... 54
4.4. Load Planning. ..... 55
4.5. Pallet Build-up. ..... 56
4.6. Deliver Cargo. ..... 56
4.7. Cargo Processing. ..... 56

4.8. Marshaling. ..... 57
4.9. Joint Inspection of Cargo: ..... 57
4.10. Identify/Resolve/Elevate Cargo Frustrations: ..... 57
4.11. Cargo Manifest. ..... 58
4.12. Loading: ..... 58
4.13. Aircraft Commander Briefing. ..... 58
4.14. Ramp Coordinator (RAMPCO). ..... 58
4.15. In-Transit Visibility. ..... 59

**Chapter 5— PERSONNEL PREPARATION AND DEPLOYMENT EXECUTION REQUIREMENTS 60**

5.1. The People Process: ..... 60
5.2. Air Force Deployment Planning and Execution Concept. ..... 60
5.3. Assigning Personnel to Planning and Execution Requirements. ..... 61
5.4. The Personnel Processing Process. ..... 63
5.5. Develop a Minimum Personnel Requirements List. ..... 65
5.6. Troop Commander. ..... 65

**Chapter 6— RECEPTION PROCESS 67**

6.1. The Reception Process. ..... 67
6.2. Employment and Reception Planning. ..... 67
6.3. ADVON Team Responsibilities. ..... 68
6.4. Documentation and Data Capture for Incoming Resources: ..... 68
6.5. The Reception Control Center (RCC). ..... 69
6.6. Deployed Commanders. ..... 69
6.7. The Logistics Command and Control (Log C2) Team. ..... 69

**Chapter 7— REDEPLOYMENT 71**

7.1. Redeployment. ..... 71
7.2. The Redeployment Process. ..... 71
7.3. Redeployment Documentation, Data, and Automated Systems. ..... 72
7.4. Redeployment Functions, Workcenters, Responsibilities: ..... 73
7.5. Base Closures. ..... 76
7.6. Reconstitution. ..... 77

7.7. Forms Prescribed. ..... 77

**Attachment 1— GLOSSARY OF REFERENCES AND SUPPORTING INFORMATION 78**

**Attachment 2— DUTY STATUS AND DEPLOYMENT AVAILABILITY CODES 88**

Table A2.1. Legend Code Table. ..... 88

Table A2.2. Duty Status Eligibility Codes. ..... 89

Table A2.3. Deployment Availability Codes—Legal. ..... 90

Table A2.4. Deployment Availability Codes—Physical. ..... 90

Table A2.5. Deployment Availability Codes—Time. ..... 90

Table A2.6. Deployment Availability Code—Administrative. ..... 91

**Attachment 3— DEPLOYMENT ECHELON CODES 92**

**Attachment 4— DEPLOYMENT CHECKLISTS 97**

**Attachment 5— TRAINING 118**

**Attachment 6— CARGO CATEGORY CODES 120**

**Attachment 7— DEPLOYMENT INDICATOR CODES (DEPID) 122**

**Attachment 8— CONCEPT OF OPERATIONS BRIEFING OUTLINE 123**

**Attachment 9— REPORTING UNIT LEVEL UNIT TYPE CODE (UTC) DATA TO JOPES 125**

**Attachment 10— DEPLOYMENT SCHEDULE EVENTS—LOADING SCHEDULE 126**

**Attachment 11— DEPLOYMENT SCHEDULE OF EVENTS—CARGO 127**

**Attachment 12— DEPLOYMENT SCHEDULE OF EVENTS—PERSONNEL 128**

**Attachment 13— PALLETIZED CARGO IN-CHECK FORM 129**

**Attachment 14— WHEELED CARGO IN-CHECK FORM 132**

**Attachment 15 (Added-AFSPC)— SAMPLE MEMORANDUM FOR WING DEPLOYMENT UTC READINESS TRAINING REQUIREMENTS 136**

**Attachment 16 (Added-AFSPC)— SAMPLE MEMORANDUM FOR NOTIFICATION FOR SELECTION OF DEPLOYMENT 136**

**Attachment 17 (Added-AFSPC)— SAMPLE MEMORANDUM FOR DEPLOYMENT ACKNOWLEDGEMENT 138**

**Attachment 18 (Added-AFSPC)— SAMPLE PERSONAL AFFAIRS FACT SHEET 139**

# Chapter 1

## FUNCTIONAL AREA RESPONSIBILITIES AND AUTHORITIES

### 1.1. Air Force Secretariat Agencies.

**1.1.1. The Secretary of the Air Force Office of Public Affairs, (SAF/PA).** Develops policy guidance for Air Force internal information activities in support of force deployment. Develops policy guidance for Air Force media relations in support of the public's right to be informed. Develops plans to train and equip (including deployment kits) public affairs personnel for deployment. Operates a common internal information network to support deployed Air Force units and sister/allied forces at Air Force operating locations via the Internal Bulletin Board System.

**1.1.2. The Assistant Secretary of the Air Force, Financial Management and Comptroller (SAF/FM).** Ensures all Air Force budget submissions include provisions to attain and maintain the optimum deployment capability of Air Force forces. Supervises the administration, control, and distribution of funds in support of Air Force deployment programs.

**1.1.3. The Secretary of the Air Force, Acquisition (SAF/AQ).** Establishes policy for deploying contractor personnel to support contingency and wartime operations.

**1.1.4. The Secretary of the Air Force, Inspector General (SAF/IG).** Requires that MAJCOM/CCs conduct Operational Readiness Inspections that include evaluating the deployment capability of their active and gained forces.

### 1.2. Air Staff Agencies.

**1.2.1. The Deputy Chief of Staff, Air and Space Operations (HQ USAF/XO).** Oversees all Air Force war planning and readiness.

1.2.1.1. The Directorate of Operational Plans (HQ USAF/XOX): Serves as the Air Staff focal point for operations plans. Prepares directives to support deployment planning. Ensures that the Chairman of the Joint Chiefs of Staff's (CJCS) exercise schedule includes deployment exercises. Serves as the OPR for the operations functions of the Contingency Operation/Mobility Planning and Execution System (COMPES), Deliberate and Crisis Planning and Execution Segments (DCAPES), Joint Operations Planning and Execution System (JOPES), and Unit Type Code (UTC) Management.

1.2.1.2. The Director of Security Forces (HQ USAF/XOF) Establishes policy guidance for deploying security force units as well as arming and use of force for all deploying personnel. Establishes and implements classification guidance for all aspects of the Air Force deployment process.

1.2.1.3. The Director of Intelligence, Surveillance, and Reconnaissance (HQ USAF/XOI): Oversees all intelligence support for deployment operations. Ensures that major and component commands have sufficient intelligence resources (human and technical) to meet OPLAN, contingency requirements, and force protection requirements.

1.2.1.4. The Directorate of Operations and Training (HQ USAF/XOO): Responsible for overall readiness and training, contributing to a force that is trained and ready to deploy.

**1.2.2. The Deputy Chief of Staff, Installations and Logistics (HQ USAF/IL).** Provides policy guidance to the Air Staff and MAJCOMs to achieve worldwide deployment of identified forces.

1.2.2.1. The Directorate of Plans and Integration (HQ USAF/ILX): Is the OPR for Air Force deployment and redeployment operations. Develops policy guidance to support Air Force deployment objectives. Manages Logistics Plans career field. Develops policy guidance for integrating automated systems to support deployment operations with HQ USAF/ILT, DPF, XOX, and XPM. Serves as OPR for the Integrated Deployment System (IDS). Manages the Logistics Module (LOGMOD) of COMPES. Manages LOGMOD Stand-Alone.

1.2.2.2. The Directorate of Transportation (HQ USAF/ILT): Serves as the focal point for transportation support of Air Force deployment operations.

1.2.2.2.1. Serves as OPR for the Cargo Movement Operating System (CMOS) and the Computer Aided Load Manifesting (CALM) system that are two components of IDS.

1.2.2.2.2. Develops policy guidance on transportation activities that support deployment operations.

1.2.2.2.3. Develops policy guidance on automated cargo and passenger transportation systems to support deployment processing and in-transit visibility of deployed personnel and cargo.

1.2.2.3. The Directorate of Supply (HQ USAF/ILS): Develops policy guidance on supply organizations' support of deployment operations.

1.2.2.4. The Directorate of Maintenance (HQ USAF/ILM): Develops policy guidance on maintenance organizations' support of deployment operations.

1.2.2.5. The Directorate of Civil Engineer (HQ USAF/ILE): Establishes and maintains civil engineer policy and guidance to ensure civil engineers have the capability to provide, operate, maintain, restore, and protect the installations, infrastructure, facilities, housing, and environment necessary to support air and space forces involved in deployment and sustainment operations. Establishes standards for deployment, equipping schedules, and pre-propositioning of civil engineering equipment. Ensures that deployment programs meet environmental protection requirements.

1.2.2.6. The Directorate of Services (HQ USAF/ILV): Establishes policy guidance for deploying Services forces and supports "Field Kitchen, MREs, In-Flight Feeding" for deploying forces during deployment operations.

**1.2.3. The Director of Manpower Organization (HQ USAF/XPM).** Manages the Manpower Force Packaging System (MANFOR). Oversees the Air Force Master MANFOR database and ensures the system interfaces with other automated planning systems. Serves as the OPR for the manpower functions of COMPES. Provides policy and guidance to assist MAJCOM and FOA staffs to quantify, and Manpower and Organization staffs to document wartime manpower deliberate and deployment planning, deployment execution and in-place requirements, and employment contingency organization structures in support of total force accountability and force management.

**1.2.4. The Deputy Chief of Staff, Personnel (HQ USAF/DP).** Develops concepts and systems for Air Force activities at all levels to compile accurate data on the number and location of deployed personnel (OPR for MANPER systems).

1.2.4.1. The Director of Military Personnel Policy (HQ USAF/DPF). Develops total force concepts, policies, and plans to support Reserve Component (RC) activation and mobilization, deployment, employment, accountability, demobilization, and emergency operations. Responsible for accounting for all deployed personnel.

1.2.4.1.1. Sets civilian personnel policies and procedures to meet worldwide mission requirements during contingency, wartime, exercise, and emergency operations according to AFI 36-507, *Mobilization of the Civilian Work Force*.

1.2.4.1.2. Serves as functional OPR for the personnel functionality of COMPES, Manpower and Personnel Headquarters level (MANPER-H), Repatriation and Noncombatant Evacuation Operations (NEO), Resource Augmentation Duty (READY) Program, and Status of Resources and Training System (SORTS) reporting. Establishes policy guidance for Air Force personnel support (including personnel, equipment, and training) during deployment operations. **NOTE: The READY program is critical to the installation deployment process.**

**1.2.5. The Surgeon General (HQ USAF/SG).** Establishes policy guidance for Air Force medical, immunization, and dental support (including personnel, equipment, and personal medical information) during deployment operations.

**1.2.6. The Deputy Chief of Staff, Communications and Information (HQ USAF/ SC).** Develops, concepts, policies, and guidance to provide communications, computer systems, visual information, information and postal support to deployment operations, deployed forces, and redeployment operations.

**1.2.7. The Judge Advocate General (HQ USAF/JA).** Establishes policy guidance for judge advocates to support deploying personnel, to deploy with and provide legal advice in support of the contingency operations, and to provide legal advice to commanders on all legal aspects of deployments.

**1.2.8. The Chief of Air Force Reserve (HQ USAF/RE).** Ensures AFRC forces meet the readiness requirements of the gaining active force.

**1.2.9. The Director, Air National Guard (NGB/CF).** Ensures ANG forces meet the readiness requirements of the gaining active force.

**1.2.10. The Chief of the Chaplain Service (HQ USAF/HC).** Establishes policy for chaplain support of deployment operations, including the deployment of Chaplain Service Teams and equipment.

**1.2.11. The Air Force Historian (HQ USAF/HO).** Develops concepts, policies, and guidance on History, Museum and Art Program activities in support of contingency operations. Establishes policy guidance for deploying historians (including personnel, equipment, supply, and training requirements) to support deployed unit commanders and staffs.

**1.2.12. The Chief of Safety (HQ USAF/SE).** Establishes mishap prevention, investigation, and Operational Risk Management (ORM) policy guidance for deploying forces.

**1.3. Air Force Component Commands:**

**1.3.1. Air Force Component Commands (Appropriate MAJCOM/Numbered Air Forces (NAF) AF in Component role).** Identify theater pre-positioned War Reserve Materiel (WRM) to supporting MAJCOMs to allow them to prepare specialized deployment packages. (See AFI 10-404, Expeditionary Site Planning.) Identify operational meal requirements to HQ AFSVA/SVO annually

in accordance with WMP-1, Annex E and Annex G. Distribute the command's most current all-forces OPLAN/CONPLAN Time-Phased Force Deployment Data (TPFDDs) and AEF taskings and related Deployment Requirement Manning Document to MAJCOMs, FOAs, and employment locations. Identify civilian-unique theater requirements, to include: identifying civilian only requirements in plans, uniform requirements, specialized training, pre-determine civilian pay and entitlements. Determine wartime requirements of emergency-essential (E-E) civilian personnel whether located OCONUS or CONUS. Review and approve/disapprove all requests to return personnel to home station.

**1.4. Air Force Major Commands and Direct Reporting Units:**

**1.4.1. The Director of Logistics (LG), or equivalent.** Is the OPR to provide overarching command guidance for implementing this AFI.

1.4.1.1. Responsible for input to the Program Objective Memorandum (POM) for funding and fielding of hardware for logistics automated data processing systems.

**1.4.1.1.1. (Added-AFSPC) AFSPC Wing/Logistics Plans offices must also identify hardware/software requirements for logistics automated data processing systems to their respective financial working group. Requirements must be identified within the Wing Financial Plan (FINPLAN) to allow MAJCOM visibility to assist the wing in Program Objective Memorandum (POM) efforts.**

1.4.1.2. The Logistics Plans function serves as focal point for IDS. Ensures technical and procedural guidance, as well as training, for two components of IDS (LOGMOD and LOGMOD Stand Alone) and other deployment-related systems. **NOTE: Computer Based Training for IDS and LOGMOD, users manuals, and lesson plans are available from the LOGMOD WEBSITE https://www.ssg.gunter.af.mil/logistics_module/. Additionally: ANGRC/LGX and AFRC/LGX are responsible for providing IDS component training to their respective units, unless otherwise provided by the gaining MAJCOM.**

**1.4.1.2.1. (Added-AFSPC) The office of primary responsibility (OPR) for command deployment guidance is HQ AFSPC Logistics Plans Division (LGX). HQ AFSPC staff functional managers will coordinate all deployment guidance through HQ AFSPC/LGX prior to issuance. Deployment guidance for AFRC units gained by AFSPC will be coordinated through appropriate HQ AFRC functional managers and HQ AFRC/LGX.**

**1.4.1.2.2. (Added-AFSPC) HQ AFSPC/LGX will conduct Deployment Assistance Visits (DAVs) when requested by an Installation Commander and as MAJCOM funding permits. Requests must reach HQ AFSPC/LGX at a minimum of 45 calendar days prior to the assistance visit. The Installation Commander and Installation Deployment Officer (IDO) will be provided a written report and briefed on the results of the visit prior to the team's departure. AFRC Numbered Air Force will conduct assistance visits for AFRC units.**

1.4.1.3. The Logistics Plans function serves as the focal point for Host Nation Support (HNS) and Acquisition Cross Servicing Agreements (ACSA) program issues.

1.4.1.4. Coordinates and requests support through MAJCOM/LG having area of responsibility (AOR) authority at the deployed location.

1.4.1.5. Provides guidance and authority when seeking or providing logistical support from or to the host nation under re-negotiated HNS agreements.

1.4.1.6. Provides guidance and authority when seeking or providing logistical support under the ACSA program. Support can be requested or supplied by the host nation. In instances where a deployment is in conjunction with an allied nation with ACSA, United States forces may request logistical support or provide logistical support to the allied nation.

1.4.1.7. The Transportation function serves as the focal point for support of CMOS and CALM, two components of IDS. Ensures the system is operational, and provides technical and procedural guidance, as well as training to transportation and other personnel who operate CMOS and CALM.

**1.4.2. The Director of Operations (DO) or equivalent.** MEFPAK managers distribute lists of Unit Type Codes (UTCs) identified in War and Mobilization Plan (WMP), Volume 3, Parts 1 and 2, to assigned deploying units and the Reserve Component forces.

1.4.2.1. Distribute subordinate unit deployment tasking. This will include applicable portions of each supported commander's all-forces TPFDD. Any action regarding the TPFDD will be coordinated with the appropriate functional manager for applicable UTC.

**1.4.3. Supporting Component Command Director of Personnel (DP):**

1.4.3.1. Establishes accountability for personnel at aerial ports of embarkation (APOE) as directed by the HQ USAF/CAT-MPRC.

1.4.3.2. Maintains personnel accountability by tracking and managing mini-records.

1.4.3.3. Responsible for ensuring personnel deploying are processed according to Supported Command's reporting guidance/processing instructions.

1.4.3.4. Supports filler and replacement requirements received from HQ AFPC and AEF Sourcing Center.

1.4.3.4.1. Establishes levy reclama and shortfall procedures for subordinate units and publishes these guidelines in a supplement to this instruction.

1.4.3.4.2. Includes as information addressees on Operational Plan (OPLAN) tasking messages the Installation Deployment Officer (IDO) and base contingency support staff (or equivalent).

1.4.3.5. Conducts exercises to assess the mission readiness of Mission Support Squadrons (both in-garrison and deployed). Ensures command inspection teams evaluate MPFs according to this instruction and AFI 90-201, *Inspector General Activities*. Develop procedures and checklists for exercise scenarios.

1.4.3.6. Develops and updates Designed Operational Capability (DOC) statements and implements SORTS reporting for Mission Support Squadrons or their equivalent.

1.4.3.7. Reviews and monitors SORTS reporting for accuracy and personnel C-level status.

1.4.3.8. Follows up on processing discrepancy reports submitted by MPFs or PTs within 72 hours of receipt as required by AFI 10-215, *Personnel Support for Contingency Operations* (PERSCO).

1.4.3.9. Ensures Supported Commands work LIMFACs identified by PERSCO teams that limit or hinder their operational capabilities.

1.4.3.10. The command DP may delegate the authority for contingency personnel support operations to other agencies if so aligned (Air Operation Squadrons) but maintains oversight and ultimate responsibility for ensuring adequate personnel guidance is provided to all levels. Command DP must maintain ownership of the personnel support for contingency operations (PERSCO) and ensure all PERSCO taskings are properly documented, regulated, and sufficient to support all MAJCOM operations in accordance with AFI 10-215. Any delegation of authority must be clearly documented and ensure all requirements are defined and ownership is understood by all involved parties.

1.4.3.11. Ensures all subordinate MPF PERSCO teams are manned, trained, and equipped in a "ready-to-deploy" state at all times. DP must monitor PERSCO SORTS reports in accordance with AFI 10-201, *Status of Resources and Training Systems,* and AFI 10-215 to ensure all teams are properly aligned and tasked.

**1.4.4. Supported Component Command Director of Personnel (DP):**

1.4.4.1. Develops plans and procedures to support personnel processing for military, civilian (Department of Defense (DoD), contract, and others as directed), and family members during contingency, wartime, exercise, and emergency operations according to this AFI; AFI 10-215; AFI 10-216, *Evacuating and Repatriating Air Force Family Members and Other US Noncombatants;* and AFI 36-507.

1.4.4.2. Sets up PERSCO teams and MANPER-B/I requirements in the TPFDD according to this instruction, the Unit Type Code (UTC) Mission Capability (MISCAP) statement, AFI 10-215, AFMAN 10-401, Vol 2, Annex G to War and Mobilization Plan (WMP) I and WMP III, and coordination with functional managers to ensure taskings are sourced through proper channels. PERSCO team composition must include accounting for forces at same location, GSUs, and other services personnel according to Supported Command's accountability guidelines.

1.4.4.3. Coordinates on requirements with the MAJCOM Functional staffs during the deliberate planning phase.

1.4.4.4. Develops Annex E (Manpower and Personnel Annex) for each tasked OPLAN using the MAJCOM Functional staff deliberate planning inputs and Base Support Planning (BSP) information.

1.4.4.5. Ensures Annex E identifies and assigns all PERSCO logistical support requirements necessary for supporting the deploying force structure (e.g., communications, power, furniture, and so on).

1.4.4.6. Outlines any CINC unique reporting requirements and their submission timelines. Parent MAJCOMs are responsible for providing Deployment Requirements Manning Documents (DRMD) deployment taskings for their units unless other formal arrangements have been made.

1.4.4.7. Identifies to Base Support Planning Committee (BSPC) members the logistical support requirements needed within the theater by PERSCO teams for site survey development supporting wartime and contingency operations.

1.4.4.8. Identifies the need for secure and nonsecure phone/fax capability.

1.4.4.9. Identifies the need for Secure Internet Protocol Network (SIPRnet) LAN capability.

1.4.4.10. Identifies the need for PERSCO to operate in a classified operating environment.

1.4.4.11. Develops and validates personnel requirements for sourcing. Reviews and validates filler and replacement requirements from operational PERSCO teams and MPFs.

1.4.4.12. Realigns command resources to fill validated requirements before asking AEF Sourcing Center to initiate Air Force-wide sourcing.

1.4.4.13. Provides for each operation (by AIG 10842 message), classification guidance, a clear-text listing of DRMD line remarks, and reporting instructions for each operation to HQ AFPC/DPWRM, all supporting component commands, MPFs, and PTs supporting the operation.

1.4.4.14. Distributes plan requirements to tasked MPFs and tracks receipt of those plan requirements. Ensures PT notifies MAJCOMs by message of unfilled requirements. **NOTE: Recommend 30 days prior to DRI**.

1.4.4.15. Develops concepts, plans, and procedures to support personnel deployment, repatriation, NEO, and reception processing.

1.4.4.16. Develops and implements theater-unique personnel programs and procedures.

1.4.4.17. Oversees force accountability within the theater of operation, including deployed Air Force civilian and contract employees.

1.4.4.18. Follows higher headquarters reporting requirements.

1.4.4.19. Implements personnel tracking and reporting at aerial port of debarkation (APOD) and APOE as directed by the AFOG/CAT-MPRC.

1.4.4.20. Manages PERSCO teams in theaters of operation.

1.4.4.21. Maintains operational control of all MANPER-B systems in theaters of operation.

1.4.4.22. Ensures PERSCO teams and MPFs within theater follow accountability and reporting procedures in the reporting guidance/processing instructions and AFI 10-215.

1.4.4.23. Ensures HQ USAF/CAT-MPRC, HQ AFPC/PRC, supporting component commands, and applicable MPFs and PTs in the AOR receive correspondence on all command personnel programs.

1.4.4.24. Personnel Readiness Function (PRF) will produce CED orders using MANPER-B for all deployments in support of real-world contingencies, exercises, and unit moves involving deployment of personnel.

1.4.4.25. The PRF will provide a Personnel Refresh file to the LOGMOD administrator at least weekly.

1.4.4.26. Follows guidance in AFI 10-215 on the utilization and accountability of individual mobilization augmentees (IMA).

1.4.4.27. Provides a detailed concept of operations (CONOPS). This CONOPs includes detailed automated or manual accountability and instructions to satisfy Air Force reporting requirements and includes (but not limited to):

1.4.4.27.1. Range of force accountability (other services, civilians, allied nations, GSUs, etc).

1.4.4.27.2. Communications factors (if direct connectivity is unavailable or a LIMFAC.

1.4.4.27.3. Supported Command-unique reports.

1.4.4.27.4. Command Structure.

**1.4.5. Manpower Organization (XPM or MO).** Supporting Manpower and Organization staffs ensure AF component command requirements and organization structure for tasked units is documented in DRMDs. Adhere to tailoring procedures as established by the AF component command.

1.4.5.1. Distribute subordinate unit deployment tasking. This will include applicable portions of each supported commander's all-forces TPFDD and associated DRMD. Any action regarding the TPFDD will be coordinated with the appropriate functional manager for applicable UTC. Any action regarding DRMD will be coordinated with the appropriate functional manager.

1.4.5.2. Supporting Manpower and Organization staffs document subordinate unit backfill requirements in DRMDs and provide supporting command personnel readiness staffs for sourcing.

1.4.5.3. Supporting Air Component Command Manpower and Organization staffs ensure air component personnel readiness staffs get and transmit current DRMD data via levy flows to supporting MAJCOMs and subordinate units.

1.4.5.4. Ensures all DRMD and TPFDD requirements accurately reflect the CINCs needs and are verified through the appropriate functional manager.

**1.4.6. The Directorate of Communications and Information.** Provides air traffic control and weather forecasting equipment to deployed forces. Supports communications, computer systems, visual information, information and postal support to deployment operations, deployed forces, and redeployment operations.

**1.4.7. Aerospace Expeditionary Force Center.** The Aerospace Expeditionary Force Center (AEFC) is responsible for AEF deployment tasking and scheduling. The AEFC coordinates the sourcing of supported component requirements in close coordination with providing commands (MAJCOMs/FOAs/DRUs). The AEFC develops and maintains 10, AEF TPFDD libraries populated with the needed UTCs and DRMDs to support OPLAN/CONPLAN and other taskings. These 10 AEF TPFDD libraries are augmented by two on-call AEWs to support rapid changes in CINCs' requirements. Reference AFI 10-400 Aerospace Expeditionary Force Planning for additional guidance on the AEFC.

**1.4.8. MAJCOM Functional Area Managers (FAM).** Provide expert guidance for UTC tasking of AFSC that they manage. MAJCOM Functional Area Managers are the approval authority for any UTC tailoring action. Provide appropriate guidance to Manpower and Organization staff members to ensure the DRMD accurately reflects the UTC requirements for sourcing and tasking in a timely manner. Responsible for approval and disapproval of shortfalls and reclama actions in coordination with the AEFC, IAW AEFC implementing guidance. Approved shortfalls or reclama actions will be forwarded to the appropriate agencies.

**1.5. Installation/Base-Level Agencies:**

**1.5.1. Host Installation Commander or equivalent.** Responsible for installation/unit deployments to include movement of tenant units and transient forces. Oversees all staff activities in support of

deployment planning. Defines, through the Installation Deployment Plan (IDP), the local procedures for deploying forces.

1.5.1.1. Ensures that units including tenant units regardless of their MAJCOM, meet all pre-execution, command and control, cargo, and personnel requirements outlined in this AFI.

1.5.1.2. Designates an Installation Deployment Officer (IDO) and alternates. The IDO should be a military or federal civilian Logistics Plans Officer. Appointments will be in writing, signed by the Wing Commander with copy to Command Post, Battle Staff/Crisis Action Team (BS/CAT) and all unit commanders. The wing command post (CP) will include the IDO and appointed alternates on the Battle Staff Recall Roster for all deployment and redeployment related contingencies.

**1.5.1.2.1. (Added-AFSPC) In addition, provide a copy of this appointment to HQ AFSPC/LGXP, 150 Vandenberg St., Ste 1105, Peterson AFB CO 80914-4380.**

1.5.1.3. Ensures there is a viable READY Program IAW AFI 10-217. **NOTE: The READY program is critical to the success of the installation deployment process. NOTE: AFI 10-217 and the READY program are only applicable to ANG and AFRC personnel after involuntary activation. AFRC for day-to-day manning, training, and deployment operations uses an augmentee program as directed and required in AFRCI 10-101, *Wing Plans Procedures.***

1.5.1.4. Establishes a direct line of responsibility with the IDO for all types of deployment operations (contingencies, exercises, ORIs, etc).

1.5.1.5. Determines the frequency and scope of the exercises based on what is necessary to ensure the process runs efficiently and all units, including tenant units, are prepared to deploy. At a minimum an annual exercise, which reflects the most stringent deployment tasking, must be accomplished for all units. For ANG units, commanders will determine frequency and scope of exercises.

**1.5.1.5.1. (Added-AFSPC) As a minimum, AFSPC active duty units must participate in a deployment exercise (e.g. peacetime deployments, local/HHQ exercises and ORIs) which activates all deployment work centers semi-annually (the requirement for AFRC units that are AFSPC-gained will be annual). Tasked UTCs in support of Major Theater War Operations Plans (OPLANs) (non-AEF) will participate in an exercise at least annually. The commander may increase exercise frequency and participants (i.e. AEF taskings) to meet unit readiness requirements.**

1.5.1.6. Ensures the Deployment Control Center (DCC), deployment work centers, and Unit Deployment Managers (UDMs) (including tenants) are provided maximum system connectivity.

1.5.1.7. Ensures units have required automated deployment systems and sufficient LAN capability.

1.5.1.8. Limits non-deployment related LAN usage on the installation during deployment operations.

1.5.1.9. Ensures units apply Operation Risk Management (ORM) guidelines during all phases of deployment planning, training, and execution (see AFPAM 91-215).

**1.5.2. Installation Deployment Officer.** Acts for the commander in directing, controlling, coordinating and executing installation deployments (including tenants). Any host installation support required by transiting forces must be coordinated through the IDO.

1.5.2. **(AFSPC) The IDO will not be assigned additional duties that could conflict with deployment/contingency operations.**

1.5.2.1. Develops and publishes Host Installation Commander approved local guidance on deployment procedures in the form of the Installation Deployment Plan (IDP).

**1.5.2.1.1. (Added-AFSPC) Where applicable, ensures Host AFSPC Installation Commander, or appointed designated representative, has reviewed and signed proposed cover letter to the Installation Deployment Plan (IDP). IDP reviews must be conducted annually. Send new and corrected IDP copies to your supporting NAF, HQ AFSPC/LGXP and HQ AFSPC/IG. Ensure AFRC units are included in IDP requirements. POC for AFRC units is the AFRC/XP office.**

1.5.2.2. Ensures that the installation meets all pre-execution and command and control deployment requirements.

1.5.2.3. Receives all deployment taskings, including individual personnel taskings in support of OPLAN/CONPLAN TPFDDs and or AEF commitments, and keeps the Host Installation Commander informed of such taskings.

1.5.2.4. Conducts staff assistance visits for all assigned units with a deployment commitment as determined by local guidance, including tenant units.

1.5.2.5. Responsible for the overall management and control of the Deployment Control Center, Personnel Deployment Function (PDF), and the Cargo Deployment Function (CDF).

1.5.2.6. Chairs the Deployment Process Working Group, to include Tenant units.

Provides each Unit Deployment Manager (UDM) with a detailed outline of the units deployment requirements for each OPLAN/CONPLAN TPFDDs and or AEF commitments.

1.5.2.7. Responsible for ensuring all components of IDS are operational to the maximum extent possible.

1.5.2.8. Responsible for IDS, LOGMOD and LOGMOD Stand Alone.

1.5.2.9. Responsible for wing installation deployment training. See **Attachment 5** for individual requirements and responsibilities.

1.5.2.10. Ensures the installation uses available automated systems (i.e. IDS components) to maintain cargo and passenger in-transit visibility.

**1.5.3. Wing Plans, Operations Plans, or Logistics Support Squadron's Logistics Plans Office, (as appropriate).** Reviews all deployment-related documents (for example, OPLAN/CONPLAN TPFDDs, AEF steady-state TPFDD taskings, AEF TPFDD libraries, the all-forces TPFDD for equipment and related DRMD taskings, GCCS News Groups) and identifies the installation's total deployment and reception requirements. Based on the analysis, brief Wing/CC, key staff, tenant/CCs, and the personnel key to managing installation deployments at least annually. Include unit taskings, base through-put (units, passengers, cargo, and timing), and an assessment of overall supportability. Assists the IDO on providing technical guidance for IDS and LOGMOD.

1.5.3.1. Provides the IDO with a detailed outline of the deployment requirements of each OPLAN/CONPLAN and AEF requirements.

1.5.3.2. Identifies other forces that the installation will provide with transportation, messing, lodging, storage and security support, etc. during deployment operations.

1.5.3.3. Serves as the office of primary responsibility for IDS, the flow of IDS data at the installation, and the LOGMOD and LOGMOD Stand-Alone components of IDS

1.5.3.4. Serves as members of the Deployment Process Working Group.

**1.5.4. Operations Group Commander (OG/CC, DO, XP or CVX) or Equivalent.** Ensures that assigned units maintain a high state of readiness and meet the cargo and personnel preparation requirements.

1.5.4.1. Keeps the organizations providing resources advised of any change in applicable plans, for example, new or revised plan, OPLAN Identification (PID) change, and TPFDD refinement changes. This notification must be accomplished within 30 days after the supported component command has notified the supporting organization of the changes.

1.5.4.2. When tasked to support OPLANs, develop planning documents that address deployment planning for supporting the OPLAN taskings. Provide copies of these documents to the Air Force Component Command (AFCC) which has primary planning responsibility for review and comment. At least 30 days prior to the scheduled supported commander OPLAN submission to the CJCS, or within 60 days after the Forces/Logistics TPFDD refinement conference for non scheduled OPLANs, provide installation deployment officers and wing/group DO's (Military Personnel Flights in the ARC) with the deployment taskings for their units. Parent MAJCOMs are responsible for providing deployment requirements manning document (DRMD) deployment taskings for their units which are tenants unless other formal arrangements have been made.

1.5.4.3. Designates a representative to be a member of the Deployment Process Working Group.

**1.5.5. Logistics Group Commander (LG/CC).** Ensures that assigned units maintain a state of readiness and meet the cargo and personnel preparation requirements.

1.5.5.1. Provides logistics support to the IDO to facilitate installation deployment operations.

1.5.5.2. Designates a representative to be a member of the Deployment Process Working Group.

**1.5.6. Transportation Squadron Commander (LGT/CC).** Responsible for organizing, establishing, and leading the CDF. Defines transportation deployment work center staffing, facilities, work areas (marshaling yard, hard stands, etc.), and requirements. Defines and provides training.

1.5.6.1. Outlines transportation squadron responsibilities in meeting deployment requirements, to include contract workload.

1.5.6.2. Serves as focal point for CMOS and CALM and provides training on these systems.

1.5.6.3. Ensures certified load planners are available to support the deployment process.

1.5.6.4. Responsible for ensuring that CMOS can receive wing/unit level deployment data from LOGMOD, process this data, and pass this data to GTN for ITV (In-Transit Visibility).

1.5.6.5. Designates a representative to be a member of the Deployment Process Working Group.

1.5.6.6. On AMC bases with a host base aerial port squadron, the aerial port squadron assumes responsibility for the deployment functions described above. See also paragraph 2.9.

**1.5.7. Chief of Supply (LGS/CC).** Provide overall management including, but not limited to, secure storage, issue/receipt, and shelf-life control for those mobility bags under their control. Ensures the deployment process includes procedures for issuing mobility bags and weapons and accounting for deployed equipment and spare parts.

1.5.7.1. Ensures the Mobility Inventory Control and Accountability System (MICAS) is used for all mobility bag management.

1.5.7.2. Provides training for deployed property custodians.

1.5.7.3. Designates a representative to be a member of the Deployment Process Working Group.

**1.5.8. Operational Contracting Squadron Commander (CONS/CC).** Ensures that contractors continue to perform essential services during crisis situations, using contractor employees or other personnel as necessary.

1.5.8.1. Ensures that required contingency contracting officers are designated, trained, and maintain a current contingency contracting kit to meet requirements of Air Force and Federal Acquisition Regulations and guidance appropriate to contingency contracting.

**1.5.9. Support Group Commander (SPTG/CC).** Ensures that assigned units maintain a state of readiness and meet the cargo and personnel preparation requirements.

**1.5.10. Mission Support Squadron Commander (MSS/CC).** In Coordination with the IDO determines the most efficient way to process deployed personnel in accordance with this AFI, AFI 10-400, AFI 10-215 and applicable reporting instructions and MPFMs.

1.5.10.1. Provides IDO with inputs to assist in preparing local deployment guidance on MSS responsibilities in meeting deployment requirements.

1.5.10.2. Designates a Personnel representative to be a member of the Deployment Process Working Group to represent MANPER-B related interface and Personnel processing issues.

1.5.10.3. Assists the Operations Plans, Wing Plans or Logistics Plans office (as appropriate).

1.5.10.4. Ensures MPF PERSCO teams are properly trained and equipped to meet deployment needs. This includes, but is not limited to, ensuring all assigned PERSCO members have or are working towards obtaining the required Special Experience Identifier(s) (SEI), meet all eligibility criteria within the UTC MISCAP and deployment requirements, and all required equipment is maintained in a ready-to-deploy state in accordance with AFI 10-215.

**1.5.11. Military Personnel Flight (MPF) Commander.**

1.5.11.1. Ensures the MPF provides prompt support to deploying and deployed commanders and base personnel during contingency, wartime, exercise, training and emergency operations.

1.5.11.2. Provides trained personnel and equipment to support emergency operations, such as repatriation of DoD personnel, natural disasters, and so on.

1.5.11.3. Maintains personnel accountability of forces by tracking and managing mini-records.

1.5.11.4. Outlines inbound force accounting procedures for build-up locations. This includes planning factors to handle and maintain accountability of NEO and Safe Haven Operations according to AFI 10-404.

1.5.11.5. In coordination with the IDO, establishes and provides manning of the Personnel aspects of the Personnel Deployment Function (PDF), providing personnel program support for individuals deploying during contingency, wartime, exercise and emergency operations in accordance with this AFI, AFI 10-215, and the Base Support Plan. Develops and obtains approval of a plan to scale down MPF customer service in order to support the Personnel Deployment Function activation aspect of the Installation Deployment Plan.

1.5.11.6. Ensures personnel from other base functions are ready to support the PDF when activated by the IDO. At a minimum, these agencies must be represented on the PDF: Finance, Immunizations, Legal, Chaplain, and Transportation Passenger Representative. Other agencies may be added, as needed.

1.5.11.7. Notifies the deploying unit and the IDO, when personnel taskings are received in the Personnel Readiness Function (PRF).

1.5.11.8. Ensures PERSCO teams are properly trained and equipped to meet deployment needs. This includes, but is not limited to, ensuring all assigned PERSCO members have or are working towards obtaining the required Special Experience Identifier(s) (SEI), meet all eligibility criteria within the UTC MISCAP and deployment requirements, and all required equipment is maintained in a ready-to-deploy state in accordance with AFI 10-215.

1.5.11.9. Ensure PRF furnishes all files required to facilitate use of IDS to the appropriate function for personnel deployment assignments, manifesting and ITV.

**1.5.11.9.1. (Added-AFSPC) Ensures specific MANPER-B files are transferred into the Logistics Module (LOGMOD) per direction of the IDO.**

1.5.11.10. Uses AFI 10-215 for specific guidelines on issuing Contingency, Exercise, and Deployment (CED) TDY orders and preparation of Personnel Accountability Kits (PAKs) for deploying personnel.

1.5.11.11. MAJCOMs, through the PRF, use CED TDY orders to direct the deployment of active, Air Reserve Component, federal civilian, and contractor personnel to a specific location in a theater of operation during contingency, wartime, exercise, and emergency operations. The PRF or PDF (as applicable) prepares, verifies, and authenticates CED TDY orders.

1.5.11.12. Ensures assigned units follow specific procedures to ensure accountability of all deployed forces. Refer to AFI 10-215 and AFI 38-205 for specific guidelines.

1.5.11.13. Assists the MSS/CC with designation of a PRF representative to be a member of the Deployment Process Working Group.

1.5.11.14. Ensures all assigned MANPER-B systems are properly accredited for SECRET operation and all outage, virus, and relocation reports are submitted appropriately as outlined in AFI 10-215.

1.5.11.15. Ensures all mini-records (DPT) for deploying personnel are transmitted according to AFI 10-214 and Support Command reporting guidance/processing instructions.

1.5.11.16. Administers the Resource Augmentation Duty (READY) Program for the installation commander IAW AFI 10-217. Does not apply to ANG/AFRC units

1.5.11.17. Establishes a Personnel Deployment Function (PDF) to provide personnel program support for individuals selected to deploy during contingency, wartime, exercise and emergency operations. See AFI 10-215 and AFI 10-400 for additional guidance.

**1.5.12. The Personnel Deployment Function (PDF).** A PDF is directed by JP 1-0, *Joint Doctrine for Personnel Support to Joint Operations*. It is an organized processing activity designed to ensure deploying personnel are properly accounted for and prepared for deployment. It serves as the installation's focal point for monitoring all personnel processing activities to include orders preparation and production, eligibility screening, passenger manifesting, pre-deployment briefings, passenger baggage handling and passenger loading.

1.5.12.1. The PDF advises commanders when personnel selected for deployment are ineligible to deploy according to this AFI, AFI 10-201, AFI 10-215, AFI 36-2110, and the reporting instructions/processing guidance issued by the Supported Command. Although the ultimate responsibility for deployment eligibility rests with the unit commander, the PDF serves as the Wing's last set of eyes ensuring all personnel in a questionable deployment status are waivered according to the governing guidance or replaced.

1.5.12.2. The IDO, in coordination with the MPF Commander, establishes a PDF in accordance with this AFI and AFI 10-215. The rule of thumb for standup of a stand-alone PDF processing line is a deployment force size of 25 or more personnel. However, special circumstances such as the deployment reason, resource availability, and so on can preclude the use of this rule of thumb. Ensure its capabilities meet the requirements of the forces deploying. Once established, the PDF must be prepared for continuous personnel processing 24 hours a day. However, if the IDO deems a stand-alone PDF line is not required, personnel processing must still take place at designated functional offices to ensure deploying personnel meet the minimum criteria for deployment eligibility and readiness. At a minimum, the PDF must provide Deployment Eligibility and Immunization stations for processing deploying forces. Depending on the scope of the deployment, the PDF may have to establish the following optional processing stations (See **Attachment 4** for detailed information for each center and function):

1.5.12.2.1. ID Tags, military & civilian ID cards, Geneva Convention cards, passports, and visas

1.5.12.2.2. Changes to DD Form 93, Emergency Data Card, and SGLI

1.5.12.2.3. Finance

1.5.12.2.4. Legal

1.5.12.2.5. Chaplain

1.5.12.2.6. Family Support

1.5.12.2.7. Services (In-Flight Kitchen)

1.5.12.2.8. Baggage Handling

1.5.12.3. If a stand-alone PDF line is not established, deploying personnel must still be made of aware of the optional deployment processing services available to them, especially in regards to Legal, Chaplain, and Family Support.

1.5.12.4. Ensures units provide civilians with appropriate passport and visas, if required. When deploying civilian personnel, the PRF will ensure they have the appropriate civilian ID card and Geneva Convention card.

1.5.12.5. Ensures personnel selected for deployment must have enough retainability to complete the established TDY tour length according to AFMAN 10-401, Vol I, and AFI 36-2110.

1.5.12.6. Maintains accountability of deploying personnel from the time they arrive at the PDF processing line until they leave home station. This includes controlling the personnel until they reach the "sterile" area for departure.

1.5.12.7. Upon request from deploying personnel, the PDF provides services for new emergency data card (DD Form 93), identification card, Geneva Convention card, and identification tags (dog tags).

1.5.12.8. In coordination with the Security Forces and OSI, ensures deploying members are briefed on the Foreign Clearance Guide, DoD Travel Security Advisory, the area of deployment, force protection requirements, and any other training requirements identified in the Supported Command reporting instructions/processing guidance.

1.5.12.9. Coordinates UDM filler and shortfall actions for unit personnel shortages with the personnel representative on the DCC staff and UDM.

1.5.12.10. Submits personnel shortfall messages according to AFI 10-215 and Supported Command reporting instructions/processing guidance, and appropriate AEFC guidance when position cannot be filled from base resources.

1.5.12.11. Uses MANPER-B to produce Contingency, Exercise, and Deployment (CED) TDY orders according to this AFI, AFI 10-215, and Supported Command reporting instructions/processing guidance. Produce CED orders for all deployments in support of real-world contingencies, exercises, and unit moves involving deployment of personnel.

**1.5.12.11.1. (Added-AFSPC) The Military Personnel Flight (MPF) Commander will determine the location of the CED orders processing function. The CED orders processing function can be in the MPF (usually the Personnel Readiness office) or collocated with the Personnel Deployment Function (PDF). If not located with the PDF, the MPF commander will establish communication lines between the PDF and the orders function to ensure all changes are relayed immediately. Appropriate security measures must be implemented to ensure classified information is passed via secure means. The MPF commander will establish procedures to have orders delivered to the PDF in time for processing.**

1.5.12.12. Provides LOGMOD updates or changes to requirement information as they occur. Processes LOGMOD personnel assignment data into MANPER-B for issuing orders. Provides the Transportation office a CMOS file for electronic manifesting once all processing of the chalk is complete.

1.5.12.13. Prepares a Personnel Accountability Kit (PAK) for the deploying troop commander according to AFI 10-215 and Supported Command reporting instruction/processing guidance.

1.5.12.14. Instructs all deploying personnel to report to the deployed Personnel Processing facility (Normally a PERSCO team) for in-processing and deployed accountability.

1.5.12.15. Works with the PRF ensuring all deployed personnel's duty status is updated reflecting their deployment and departure from home station.

1.5.12.16. Ensures all mini-records (DPT) for deploying personnel are transmitted according to AFI 10-215 and Support Command reporting guidance/processing instructions.

1.5.12.17. Administers the Resource Augmentation Duty (READY) Program for the installation commander IAW AFI 10-217. Does not apply to ANG/AFRC units

1.5.12.18. Establishes a Personnel Deployment Function (PDF) to provide personnel program support for individuals selected to deploy during contingency, wartime, exercise and emergency operations. See AFI 10-215 and AFI 10-400for additional guidance.

1.5.12.19. Ensures personnel from other base functions are ready to support the PDF when activated by the IDO.

1.5.12.20. Notifies the deploying unit through the IDO, when personnel taskings are received in the Personnel Readiness Unit.

1.5.12.21. Ensures PERSCO teams are properly trained and equipped to meet deployment needs. Ensure PRF furnishes all files required to facilitate use of IDS to the appropriate function for personnel deployment assignments, manifesting and ITV.

1.5.12.22. Uses AFI 10-215 for specific guidelines on issuing Contingency, Exercise, and Deployment (CED) TDY orders and preparation of Personnel Accountability Kits (PAKs) for deploying personnel.

1.5.12.23. Ensures assigned units follow specific procedures to ensure accountability of all deployed forces. Refer to AFI 10-215 and AFI 38-205 for specific guidelines.

**1.5.13. The Family Support Center (FSC)** has overall responsibility for the following functions.

1.5.13.1. Providing personnel and their families with personal family readiness briefings and assists with family difficulties that occur during deployments. **NOTE: Personnel assigned to deploy may seek counsel before or after return from deployment. The FSC will be notified of all deployments/extended TDY of 30+ days. The FSC will work with the MPF and Unit Deployment Managers to ensure the FSC is included on their deployment-processing checklist.**

**1.5.14. Civilian Personnel Flight Chief (CPO).** Ensures advises deploying civilian employees of their benefits and entitlements.

**1.5.15. Communications Commander (SC)** will ensure the installation's communications infrastructure will support Integrated Deployment System as a critical war fighting system.

1.5.15.1. The Communications Commander will provide technical LAN assistance for IDS during deployment and redeployment situations.

1.5.15.2. Fulfills requirements for GCCS and SIPRnet that support classified deployment planning and execution activities.

1.5.15.3. Designates a representative to be a member of the Deployment Process Working Group. This member will ensure the DCC, deployment work centers, and UDMs (including Tenant units) are provided maximum system connectivity during pre-deployment, deployment, and re-deploy-

ment contingencies. This member will also serve as a direct point of contact to the IDO for firewall and base infrastructure concerns.

**1.5.16. Chief of Security Forces (SFS/CC).** Provides support in meeting deployment security and force protection requirements (for example, funds escort, anti-hijacking protection, drug suppression, aircraft security and resource protection). CATM provides weapons courier training.

**1.5.17. Civil Engineer (CE).** Supports the base chemical-biological warfare defense program in accordance with AFI 32-4001, Disaster Preparedness Planning and Operations.

**1.5.18. Medical Group Commander (MG/CC) (or equivalent).** Ensures that assigned units maintain a high state of readiness and meet the cargo and personnel deployment preparation requirements. Ensures the pre- and post-deployment assessments are conducted for deploying personnel. Ref JCS Memo dated 4 Dec 98, Subj: Deployment Health Surveillance and Readiness.

1.5.18.1. Provides trained individuals (including back-ups) to the PDF when activated, if required by local procedures.

1.5.18.2. Provides a current DD Form 2766, Preventative Health Assessment (PHA), for all deploying personnel. DD Form 2766 may be hand-carried by the individual; bulk shipped via courier in a properly sealed envelope with the following information on the package: "Sensitive Medical Information - To be opened by Medical Personnel Only"; or hand-carried by Squadron Medical Element (SME) personnel.

1.5.18.3. Provides copies of the most current DD Form 2766, Preventative Health Assessment (PHA) and/or AF Form 1042, Medical Recommendation for Flying or Special Operational Duty, for deploying personnel on flying status. The DD Form 2766, Preventative Health Assessment (PHA) and/or AF Form 1042 will be retained by the medical personnel, troop commander, or other responsible agents and delivered to the sustainment medical personnel at the deployed location.

1.5.18.4. Ensures medical intelligence on health threat is used to prevent diseases from needlessly incapacitating personnel. Recommend intelligence information be disseminated to all deploying personnel before departure.

1.5.18.5. Advises commanders on the availability of unit personnel enrolled in the substance evaluation process, the alcohol and drug abuse prevention and treatment (ADAPT) program and QNFT program IAW AFMAN 32-4006. QNFT is required before high, medium and low threat areas.

1.5.18.6. Ensures adequate supplies of chemical prophylaxis are available for assigned UTC personnel on the base.

**1.5.19. Comptroller (Wing/FM).** Provides financial management assistance and technical services to support deployment requirements (for example, obtaining funds for partial payments and per diem advances).

1.5.19.1. Provides financial analysis and budget support of the deployment program.

1.5.19.2. Provides trained individuals (including back-ups) to the PDF when activated, if required by local procedures.

1.5.19.3. Assigns personnel to deploy and perform paying agent duties in support of deployed contingency contracting officers.

**1.5.20. Staff Judge Advocate (SJA).** Advises installation commanders on all legal aspects of deployments.

1.5.20.1. Provides mission related legal assistance [to eligible personnel and their family members] and pre-briefs deploying personnel on pertinent host nation legal issues and Status Of Forces Agreement (SOFA) status, if any.

1.5.20.2. Provides trained individuals (including back-ups) to the PDF when activated, if required by local procedures.

1.5.20.3. Ensures that assigned JA personnel maintain a high state of readiness to deploy in support of contingency operations. Provides personnel subject to deploy with Law of Armed Conflict training.

1.5.20.4. Assists the Logistics Plans function with understanding legal aspects of Host Nation Support Agreements

**1.5.21. Manpower Organization Office (MO).** Helps define requirements and improve deployment procedures in conjunction with the installation's responsible agencies, subordinate commanders, and functional managers. Close coordination with base personnel readiness function is vital to the success of deployment operations.

1.5.21.1. Verifies accuracy of deliberate and crisis action planning manpower requirements, as required by the IDO and maintains and disseminates deliberate planning DRMDs to tasked units through the IDS process of transferring data from MANPER-B to LOGMOD. Coordinate recommended changes to plan requirements with parent MAJCOM/AEFC.

1.5.21.2. Designates a MO representative to be a member of the Deployment Process Working Group.

1.5.21.3. Uses MANPER-B to meet planning and execution requirements. When authorized by the MAJCOM Manpower or Personnel function and directed by the IDO create execution levy file based on the tasking.

1.5.21.4. Maintains a current MANFOR database file within MANPER-B, including any base unique non-standard UTCs. Provides Wing or Logistics Plans office and unit commanders with MISCAPS as requested.

***NOTE:***

ANG and AFRC units are not authorized a Manpower and Organization function; therefore, the Military Personnel Flight chief or Military Personnel Flight Commander assumes these responsibilities.

**1.5.22. Wing Chaplain (Wing/HC).** Assigns personnel to deploy in support of contingencies, wartime, emergency operations, and exercises. Chaplains, in accordance with Geneva Convention, will not bear firearms.

1.5.22.1. Ensures all Chaplain Service personnel identified/sourced against a UTC requirement are trained according to this AFI, para 1.6.2, and AFI 52-101, paragraph 2.1.2, and all personnel subject to deploy meet minimum training requirements according to this AFI.

1.5.22.2. Ensures that Chaplain Service personnel maintain a state of readiness and meet the cargo and personnel deployment preparation requirements.

1.5.22.3. Provides religious support to deploying personnel, including a pre-brief or distribution of information about any sensitive cultural/religious issues in the employment areas.

1.5.22.4. Provides trained individuals (including back-ups) to the PDF when activated, if required by local procedures.

**1.5.23. Public Affairs Officer (Wing/PA).** Ensures personnel are informed of local conditions in the forward area prior to arriving at the forward area– subject to classification at the time of deployment processing.

1.5.23.1. Ensures deploying personnel know their rights and responsibilities regarding interaction with news media. Guidance for disseminating information will be provided in local deployment guidance, Public Affairs handouts or briefings before deployments.

1.5.23.2. Ensures families and base community receive information about deployed units and deployed personnel receive information about home base developments.

1.5.23.3. Ensures guidelines in Public Affairs doctrine, USAF War and Mobilization Plan, Vol 1, supported Commander-in-Chief's Operation Plan, and messages from Assistant Secretary of Defense for Public Affairs are adhered to.

**1.5.24. Wing Safety (SE).** Assists commanders in implementing their mishap prevention program to include all key elements of Safety. Ensure ORM techniques are implemented to identify and mitigate the risks involved in deployment operations.

## 1.6. Squadron, Unit, and/or Tenant Unit

**1.6.1. Commanders' Responsibilities.** Commanders must ensure that all personnel and cargo meet the deployment and redeployment readiness and preparation requirements in this AFI, AFMAN 23-110, *USAF Supply Manual*, AFMAN 10-401, Vol 1, the Installation Deployment Plan and other MAJCOM and local deployment guidance. Squadron/unit commanders will directly support the IDO during pre-deployment planning, training and during actual deployment and redeployment operations. **NOTE: Tactical Air Control Parties (TACP) assigned to Army installations are waived from the requirements in this AFI, but must comply with MAJCOM guidance, including guidance mandating use of all or some portions of this AFI. Additionally, they will comply with the deployment planning requirements outlined in Army Host Base Deployment Plan 525-10 and applicable Army installation regulations. TACP units must still use LOGMOD and comply with LOGMOD UTC management reporting requirements IAW AFMAN 10-401, Vol 1.**

1.6.1.1. Commanders will check schedules for unit and any individual deployments at the Aerospace Expeditionary Force Center (AEFC) Internet home page and/or Wing Plans/Logistics Plans functions.

1.6.1.2. Advise IDO of all taskings.

1.6.1.3. Provide the IDO with all MAJCOM Functional Area Managers (FAM) tasking messages/ letters and Designed Operational Capability (DOC) Statements. Provides initial and subsequent changes of unit DOC statement(s) to the host Wing Plans or Logistics Plans function to validate the unit's wartime commitment. Applicable to all host and tenant units with deployment UTCs

assigned. Identify, in advance, all eligible personnel, primary and alternates (alternates will be identified resources permitting), and equipment for deployment and ensure that all unit personnel know their deployment responsibilities. Ensure deploying personnel meet tasking requirements to include line remarks.

**1.6.1.3.1. (Added-AFSPC) HQ AFSPC MAJCOM Functional Area Manager memorandums are considered a heads-up notice to the unit that they have been tasked with a UTC and the UTC will be postured within the Air Force Wide UTC Availability and Tasking Summary (AFWUS). Taskings received by the tasked unit which are not identified in the AEF TPFDD Library are considered mismatched taskings and must be resolved between the affected unit and their appropriate MAJCOM Functional Manager.**

1.6.1.4. Appoint unit cargo increment monitors in writing to manage a given set of cargo increments from each deploying unit. The monitors will ensure inputs/updates are provided to the UDM, who will ensure the LOGMOD database is updated with the information.

1.6.1.5. Designate a primary and alternate UDM, in writing, to assist the IDO in carrying out specific preparation requirements. UDMs must be proficient and experienced in the deployment, process, requirements, and systems. Replacement of these appointments will be kept to a minimum of 18 months.

**1.6.1.5.1. (Added-AFSPC) AFSPC organizations providing administrative command for other organizations (i.e., Mission Support Squadrons providing administrative oversight to wing staff agencies) will assume Unit Deployment Manager (UDM) responsibilities for those organizations. The one exception follows: if the wing commander deems necessary, he/she may designate a UDM for those personnel assigned to wing staff agencies.**

1.6.1.6. Review Mission Capability (MISCAP) statement, cargo and personnel requirements for each tasked UTC.

1.6.1.7. Ensures UDMs are trained in the use of the LOGMOD and serve as members of the Deployment Process Working Group when appropriate. Ensure UDMs are equipped with the minimum PC/Laptop computers needed to run LOGMOD and LOGMOD Stand-Alone.

**1.6.1.7.1. (Added-AFSPC) Ensure UDMs are trained on the deployment availability waiver documentation and procedures.**

1.6.1.8. Squadron/unit commanders will conduct a quarterly review of all UTC taskings. Unit shortfalls, if any, will be immediately identified to the IDO upon tasking notification. Assigns primary (identified to deploy) personnel to fill deployment positions on DRMDs. Using the UDM module of LOGMOD assign personnel to positions within the appropriate LOGMOD DSOE ID which documents the base's worst case tasking.

1.6.1.9. Squadron/unit commanders will ensure all equipment cargo is properly prepared to move within the Defense Transportation System. Includes appropriate ITV documentation as well as ensuring unit personnel can immediately respond to the transportation function to reconcile any frustrated cargo.

1.6.1.10. Unit commanders will ensure a risk analysis is accomplished during pre-deployment planning to identify and ensure abatement of potential hazards. It is important to review as much

of the deployment prior to departure, as this will enable the correction or mitigation of many hazards before they become mishaps. It is equally important to accomplish a risk analysis once the unit reaches the deployment location. AFPAM 91-216, *USAF Safety Deployment and Contingency Pamphlet*, is designed to assist commanders and planners in the evaluation and mitigation of risks associated with deployments and contingencies. Ensure units conduct deployment operations in a professional military manner with a sense of urgency and keen situational awareness. Remember safety is paramount. Personnel should immediately correct unsafe conditions.

1.6.1.11. Tenant units will deploy IAW host deployment guidance. The host IDO determines specific support requirements based on tenant unit taskings and available resources.

1.6.1.12. Unit Commanders will ensure civilians have appropriate passport and visas where required.

1.6.1.13. Unit Commanders will ensure civilians have appropriate civilian ID card and Geneva Convention card.

1.6.1.14. Commanders will ensure all personnel subject to deploy have their affairs in order and a Personnel Readiness Folder (PRF), containing required deployment documentation, on file and maintained by the UDM. The following paragraphs provide a base line or a starting point aiding the building of a successful personnel process.

**1.6.2. Training Requirements and Unit Personnel Readiness.** The squadron/unit commander ensures unit personnel prepare for deployment in accordance with this AFI, AFMAN 10-401, Vol 1, and AFI 36-507. Units will ensure all military and Emergency Essential civilian, identified and subject to deploy, receive appropriate deployment training.

1.6.2. **(AFSPC) Provide HQ AFSPC/LGXP with required Wing Deployment UTC Readiness Training Requirements Memorandum to ensure all AFSPC OPLAN/CONPLAN tasked personnel meet training and equipment deployment criteria IAW AFI 10-403, paragraph 1.6.2.2. This memorandum is due (hardcopy or via email) NLT 1 April, July, October and January, see Attachment 15 for required format. The AFSPC goal is 90 percent of UTC tasked positions to be fully trained. Reports of less than 90 percent require clarification and identified resolution. Not required for AFRC units.**

1.6.2.1. Individuals needing deployment training are defined as: "Identified to Deploy" or "Subject to Deploy."

1.6.2.1.1. Identified to deploy personnel are those members assigned against specific UTC requirements in OPLAN/CONPLAN TPFDDs, AFWUS, or currently executed steady-state TPFDDs, and those identified in the AEF TPFDD libraries but not yet tasked in a TPFDD. At a minimum, these identified to deploy personnel must be fully trained and equipped before their AEF period of deployment eligibility. (e.g., 90-day AEF window).

**1.6.2.1.1.1. (Added-AFSPC) Identified to deploy personnel include individuals assigned to a primary and alternate deployment position as well as those assigned to an AEF position (hard and residual). Identified to deploy personnel must begin training and equipping upon receipt of the applicable TPFDD. Units must not wait until the AEF 2 month spin-up period; this period is set aside to accomplish AOR-specific training requirements.**

1.6.2.1.2. Subject to deploy personnel are those members whose Air Force Specialty exits in any UTC or those assigned to a federal civilian position designated as Emergency Essential. Subject to deploy personnel must be fully trained and equipped on a time available basis and as resources permit.

1.6.2.2. The following is the minimum training requirements for all identified to deploy personnel:

1.6.2.2.1. AFI 51-401, *Training and Reporting to Ensure Compliance with the Law of Armed Conflict.*

1.6.2.2.2. Personal and family readiness briefings.

1.6.2.2.3. Self-aid and buddy-care training according to AFI 36-2238, *Self-Aid and Buddy Care.*

1.6.2.2.4. Force Protection familiarization training IAW AFI 31-210, *The Air Force Antiterrorism/Force Protection (AT/FP) Program Standards.*

1.6.2.2.5. Explosive Ordnance Recognition (EOR) training according to AFI 32-4001, *Disaster Preparedness Planning and Operations.*

1.6.2.2.6. Small arms training in accordance with AFI 31-207, *Arming and Use of Force by Air Force Personnel*, and AFI 36-2226, *The United States Combat Arms Training and Maintenance Program*, AFPD 16-8, *Arming of Aircrew, Mobility and Oversea Personnel*. **NOTE: IAW AFI 36-507, *Mobilization of the Civilian Workforce*, this training is not required for federal civilians who plan to decline acceptance of a firearm if offered one. Chaplains, AFSC 52RX, as noncombatants (AFI 52-101, 1.5.) are exempt from all arms training**.

1.6.2.2.7. Nuclear-Biological Chemical Defense Training (NBCDT). NBCDT is required annually for those military personnel identified to deploy, as defined in paragraph 1.6.2.1.

1.6.2.3. Note that referenced functional publications may levy additional training requirements that mandate some or all individuals who are subject to deploy to receive training, as well. Additionally, commanders at all levels are encouraged to expand their training policy to include subject to deploy personnel as the mission dictates and resources permit.

1.6.2.4. Civilian personnel to deploy will meet all of the deployment training requirements established by their military counterparts. AFI 36-507, *Mobilization of the Civilian Workforce*, out-lines any additional training and processing requirements that may be necessary.

1.6.2.5. The unit commander or designated representative must track and ensure all personnel identified for deployment have their personal affairs in order at all times ensuring rapid response to a situation. This includes:

1.6.2.5.1. Current immunizations within 30 days of being appointed to a deployment position as a primary or alternate. (See AFJI 48-110, *Immunization and Chemoprophylaxis*). Theater-unique immunizations and disease prevention requirements as identified by the Medical Group. Contact local Medical Group/Unit for specific requirements for HIV, Anthrax, and so on.

1.6.2.5.2. Up to 90 days' supply of prescription medicines.

1.6.2.5.3. ID tags and ID cards.

1.6.2.5.4. Current DD Forms 93, *Record of Emergency Data*

1.6.2.5.5. Mask fit tests, when required. Contact the Civil Engineer Readiness Flight for specific guidance.

1.6.2.5.6. Properly filed wills, powers of attorney, family care plans, and family readiness matters, as required.

1.6.2.5.7. The AF Form 623, *On-the-Job Training Record*, will be taken with the individual for deployments exceeding 30 days. When possible, updates for the Aircraft Maintenance Special Qualification Training will be completed prior to deployment to preclude the training becoming overdue during a deployment.

1.6.2.5.8. Ample supply of personal and hygiene items to cover the projected duration of the deployment.

1.6.2.5.9. Have personnel consider taking additional supplies of certain items (for example, extra glasses, gas mask inserts, contact lens solutions, etc.) that may have limited availability at the deployment location.

**1.6.3. Training Requirements Tracking.** Units will track individual deployment requirements for all personnel subject to deploy using LOGMOD, LOGMOD Stand-Alone, or other Air Staff-directed automated system (CAMS, SPAS, AFORMS, etc.). The AF Form 4005, *Individual Deployment Requirements*, will be generated for all personnel subject to deploy.

1.6.3.1. LOGMOD module can automatically generate an AF Form 4005 product containing all required readiness information. If LOGMOD module is not used, hard copies of AF Form 4005 will be used to ensure individuals have completed all personal preparation actions. Instructions for completing AF Form 4005 are as follows and will be published in local installation deployment plan (IDP).

1.6.3.2. The individual and the UDM/Supervisor complete the AF Form 4005. The individual will date and initial next to each completed item. As a minimum, UDM/Supervisor and individual will perform a semi-annual review of the AF Form/LOGMOD product.

1.6.3.3. The UDM, supervisor, and the individual will conduct a review of the personnel readiness information as needed to update items.

1.6.3.4. The Inspection Record Section of the AF Form 4005 will be used to document reviews. Each item will be coded using the following legend:

1.6.3.4.1. √ - On Hand, complete, serviceable, properly prepared

1.6.3.4.2. X - Short, incomplete, improperly prepared item

1.6.3.4.3. ®- Successful re-inspection

1.6.3.4.4. NR - Not required

**1.7. Troop Commander:**

**1.7.1. Troop Commander Responsibilities.** The Troop Commander must account for and control the deploying force after their processing through the PDF and until arrival at the final deployed location.

1.7.1.1. The Troop Commander will be provided a Troop Commander's Personnel Accountability Kit containing:

1.7.1.1.1. CED TDY orders with SSNs of personnel deploying.

1.7.1.1.2. AF Form 245, *Employment Locator and Processing Checklist*, for each deploying member.

1.7.1.1.3. IDS LOGPLAN and execution file data disk.

1.7.1.1.4. CALM data file.

1.7.1.1.5. Passenger manifests.

1.7.1.1.6. Shipper declarations

1.7.1.1.7. Cargo Load & Packing lists

1.7.1.1.8. DD Form 2133, *Cargo Joint Inspection*

1.7.1.1.9. Aircraft load plans

1.7.1.2. The troop commander ensures Troop Commander kit is turned over upon arrival at the deployed location to the Reception Control Center (RCC). In cases where a RCC isn't activated, the kit is turned over to the Logistics Readiness Center and PERSCO team for equipment and personnel accountability.

**1.7.1.2.1. (Added-AFSPC) The PDF will provide the CED Orders, AF Forms 245, Employment Locator and Processing Checklist, and deployment records disk to the deploying Troop Commander. They may also receive a copy of the passenger manifest from the passenger processing function of the PDF. The Cargo Deployment Function (CDF) will provide the IDS LOGPLAN and execution file data disk, CALM data file, Passenger Manifests, Shippers Declarations, Cargo Load and Packing Lists, DD Form 2133, Cargo Joint Inspection, and Aircraft Load Plans to the Aircraft Commander.**

## 1.8. The Deployment Process Working Group:

**1.8.1. Deployment Process Working Group (DPWG).** The DPWG will be established at each installation. At a minimum, participants will include group commander representatives and representation from the following functional areas: Wing Plans, Logistics Plans, Manpower, Personnel, Supply, Transportation, Communications, Tenant units, and other functional areas as determined by the IDO. The communications representative will be experienced in LAN/BNCC and firewall/base infrastructure operations. The working group will oversee IDS implementation and sustainment, as well as address deployment policy and training issues. The DPWG will assist in formulation of installation deployment guidance and development of the Installation Deployment Plan. The working group will meet at least semi-annually or as directed by MAJCOM guidance. The DPWG members will maintain awareness of installation taskings.

## 1.9. Reception Control Center:

**1.9.1. The Reception Control Center (RCC)** The RCC is responsible for ensuring all arriving forces are signed in, accounted for, billeted, receive information on the facilities, services, and the mission of the base. The RCC ensures all personnel are put in contact with their deployed unit of

assignment or duty sections. The RCC provides overall direction and coordination of reception and beddown procedures and resolve overall any problems affecting reception of forces. The RCC monitors the inbound force airlift estimated and the actual arrival times of personnel and cargo. The RCC is responsible for reporting personnel arrival information via MANPER-B.

1.9.1.1. The RCC will have a representative from each deployed functional area ensuring integration of all efforts supporting base-level wartime support. Each functional agency will provide required equipment, forms, handouts, and checklists necessary to receive incoming resources. A copy of the checklists will be provided to the RCC.

1.9.1.2. The senior logistician at the deployed location and the RCC will work together to ensure all problems are resolved at the lowest level.

1.9.1.3. The command and control function at the deployed location will report the number of incoming passengers and cargo information to the RCC and coordinate support airlift servicing requirements with appropriate agencies.

1.9.1.4. If reception and deployment occur at a location simultaneously, the senior logistician will ensure the proper coordination with all agencies is performed to ensure effective utilization of available resource.

1.9.1.5. Units at the employment location will provide a representative to brief duty schedules, chain of command, supervisors, duty locations, and important phone numbers.

1.9.1.6. Employed location units will provide the following briefings:

1.9.1.6.1. On threat conditions (THREATCON).

1.9.1.6.2. Mission-oriented protection posture (MOPP) levels.

1.9.1.6.3. Provide applicable status of forces (SOFA), MOPP, and THREATCON cards.

1.9.1.6.4. JA representative will brief Rules of Engagement (ROE).

1.9.1.6.5. Public Affairs will provide literature on base facilities, mission of the base, and the local area, if available.

1.9.1.6.6. Safety will provide briefings on flightline driving and other local conditions.

1.9.1.6.7. Medical will provide literature on local area health conditions and conduct a medical orientation.

1.9.1.6.8. Security Forces (in coordination with airfield management) will arrange for custom clearances.

1.9.1.6.9. Civil Engineering will provide literature on disaster preparedness conditions and the necessary protective measures as appropriate.

1.9.1.6.10. Communications and Information Postal will provide literature on procedures for receiving and sending mail and hours of operation.

1.9.1.6.11. Services will provide lodging assignments and arrange for extended hours of operation or ground support meals for incoming forces as appropriate. Priority will be given to unit integrity and the homogeneous billeting of commissioned and enlisted personnel. Additionally, they will work closely with PERSCO to document billeting assignments.

1.9.1.6.12. Finance will provide assistance in cash advances and coordinate with local banking facilities for large cash sums.

1.9.1.6.13. Sister Service Representative(s). If incoming personnel include personnel from the Army, Navy, or Marines, a representative from the appropriate service will be available to assist in receiving and processing their personnel and cargo.

1.9.1.6.14. Security Forces representatives will monitor weapons arrival and storage.

1.9.1.6.15. PERSCO representative is responsible for providing guidelines for accounting of all forces according to AFI 10-215, Supported Command processing instructions/reporting guidance, and the deployed commander.

1.9.1.7. When TALCE or Mobility Support Element (MSE) is operating at the employment site, the RCC contacts the passenger service agent to ensure all passengers are accounted for and customs cleared before moving them to the reception area.

**1.10. Personnel Support for Contingency Operations:**

**1.10.1. Personnel Support for Contingency Operations (PERSCO).** The PERSCO team is responsible for coordinating and establishing with other deployed agencies (e.g., RCC, Lodging, Security Forces, Finance, and so on) in and out-processing procedures for all personnel arriving at the deployed location. These procedures apply to all personnel regardless the operation they are supporting. (e.g., Moron AB is a deployed location supporting multiple operations simultaneously, all forces regardless operation affiliation reports and processes through a single PERSCO team.)

1.10.1.1. PERSCO team will develop and coordinate processing procedures to efficiently process personnel. Coordinates with deployed organizations to ensure inbound forces are provided all briefings and necessary handouts. **NOTE: Take into consideration customs, Status of Forces Agreements (SOFAs), and host country restrictions**.

1.10.1.2. Provide processing procedures to RCC for reception plan integration and implementation. Procedures include:

1.10.1.2.1. Accounting of personnel arriving by all modes of transportation, including commercial air.

1.10.1.2.2. Accounting of personnel located at Geographically Separated Units (GSUs).

1.10.1.2.3. Accounting of transient personnel.

1.10.1.3. Provides personnel to RCC for accounting of receiving forces. If RCC is not established, coordinates with existing TMO/TALCE/MSE ensuring a representative meets each aircraft with personnel and conducts personnel in-processing.

1.10.1.4. Collects and maintains information that reflects the status of each load of incoming personnel.

1.10.1.4. **(AFSPC) Collects the Personnel Accountability Kit (PAK) from the Troop Commander. Ensures receipt of the deployment records disk, one copy of orders and the AF Form 245 for each arriving person.**

1.10.1.5. Establishes rapport with MTF/Mortuary Affairs and establishing reporting procedures for casualties according to AFI 10-215 and AFI 36-3002.

1.10.1.6. Briefs MAJCOMs/NAFs/Wing commanders of PERSCO's responsibilities and capabilities as outlined in AFI 10-215, Base Support Plan, and Supported Command's reporting guidance/processing instructions.

**1.11. Deployed Commander:**

**1.11.1. Deployed Commander Responsibilities.** The deployed commander is responsible for ensuring all assets, both equipment and personnel, deploying supporting the mission meets the tasking requirements as outlined by the Supported Command.

1.11.1.1. Identifies unqualified personnel or who do not meet the specifications identified in the tasking and returns them to home station at the expense of the assigned unit.

1.11.1.2. Reviews and prioritizes LIMFACs and shortfalls affecting force deployment, reception, employment, and overall mission accomplishment. Acts to resolve problems or develops course of actions to lesson the LIMFAC affect the mission.

1.11.1.3. Identifies all LIMFACs to the Supported Command affecting mission accomplishment.

1.11.1.4. Reviews Base Support Plans for unit's potential beddown and transient locations.

1.11.1.5. Coordinates with and advises the reception base or transient location of unique-support requirements, suggested changes, or other items affecting reception planning and processing.

1.11.1.6. Establishes procedures to account for deployed unit personnel, including DoD civilian and contract employees until arrival of PERSCO team.

1.11.1.7. Establishes procedures for preplanning redeployment, processing returning personnel and equipment, returning materiel to custodian officers, and attaining operational readiness after returning to home station.

1.11.1.8. In the absence of a PERSCO team or supporting MPF, oversees all of the personnel accountability and reporting requirements outlined in AFI 10-215, AFI 36-3002, and Supported Command's reporting guidance/processing instructions, including daily duty status reports and casualty information.

1.11.1.9. Ensures a smooth transition of personnel strength information and reporting upon arrival of PERSCO teams.

1.11.1.10. Prepare for redeployment operations. Responsible for conducting effective and efficient redeployment operations.

**1.11.2. Planning for Contractor Personnel During Crisis Situations.** Commanders who have mission essential contracts will comply with DoDI 3020.37. Key issues include, but are not limited to the following:

1.11.2.1. Review new and existing contracts and identify mission essential services performed by contractors which are required during crisis situations. Ensure mission essential services are identified in the contract statement of work (SOW).

1.11.2.2. Track contractor personnel who are performing or who would perform mission essential services. Include their dependents in noncombatant evacuation planning. Provide essential personnel information on contractors selected for deployment to the PRF. To ensure appropriate Let-

ters of Introduction (LOI) are produced and the contractor is entered into MANPER-B for proper accountability.

1.11.2.3. Commanders will develop contingency plans for execution of mission essential services per DoDI 3020.37.

## Chapter 2

## DEPLOYMENT PLANNING

**2.1. Deployment Planning.** Deployment planning is part of the planning process that is focused on readying the force and positioning the force to meet the mission at the employment location. The ability of units to conduct successful deployment operations and accomplish the mission once deployed depends on efficient and effective deployment planning and training.

2.1.1. Commanders and deployment mangers must analyze Operational Plans (OPLANs) and Aerospace Expeditionary Force (AEF) commitments from an employment mindset to determine the deployment configurations and flow of resources to support the mission at the bedown location. Units adjust deploying forces by taking into account the mission as well as the resources available at the deployed site (War Reserve Materiel, other Service, Host Nation, and Allied support).

2.1.2. To execute deployment operations, each installation must develop an Installation Deployment Plan (IDP) tailored to the specific requirements or concepts of operation of the units that installation supports. At the local level, the host unit commander is the deployment process owner. The host unit commander will ensure local deployment guidance in the IDP defines the process and procedures to safely and effectively deploy forces. Thorough and complete deployment planning and execution is essential and can be realized through quality review, training, exercises, and evaluation by commanders and staff agencies such the Inspector General and Safety.

2.1.3. The IDO plans and executes the deployment operation for the host unit commander. The IDO requires knowledge of the Joint Operational Planning and Execution (JOPES) process, access to classified Joint OPLANs and systems to understand deployment taskings and schedules. The IDO combines this understanding with knowledge of base support plans, status of war reserve materiel, host nation and support agreements to build an effective deployment plan using employment based thinking. Logistics Planners (AFSCs 2GOX1 and 21GX, federal civilian classification 346) trained in deployment activities and provided to manage and execute the deployment policies and guidance defined by the host unit commander and this AFI.

2.1.4. To mitigate risk, planners at all levels should continually consider ORM throughout the deployment planning and execution process, taking advantage of the expertise at their local safety offices and the tools and techniques contained in publications such as AFPAM 91-215.

**2.2. The USAF War and Mobilization Plan (WMP).** The WMP, Vol 3, Part 1, identifies Air Force General Purpose Combat Deployable Forces. The WMP, Vol 3, Part 2, identifies Combat Support Deployable Forces (for example transportation, medical, chaplain, and communication). With the advent of the WMP System and itsAir Force-Wide UTC Availability and Tasking Summary module, the USAF will use these tools to conduct the majority of sourcing for future plans. The WMP, Vol 3, Part 3, is a list of all USAF UTCs approved for use in planning and is the catalog of capabilities the Air Force offers to the Supported CINCs to build OPLAN taskings. MAJCOMs will provide excerpts of the WMP, Vol 3, Parts 1, 2, and 3 to Wing Plans. See also AFI 10-401.

**2.3. The Joint Operations Planning and Execution System (JOPES).** JOPES is both a process and automated systems to develop Operational Plan (OPLAN) Time-Phased Force Deployment Data (TPFDD) that drive deployment taskings. The OPLAN details the mission to be accomplished and the

TPFDD contains force record data, including unit type codes (UTCs) that represent unit capabilities and are the primary source for movement planning. It provides a prioritized list of what combat forces, combat support, and combat service support UTCs deploy in support of a particular operation plan. It catalogs the UTCs to deploy and outlines who provides them. It also identifies where they are going, how they get there, cargo dimensions, number of personnel, and non-organic personnel movement required. It is critical that units maintain and report UTC information as accurately as possible to ensure proper forces are identified and lift required to move each UTC is planned for and provided. Reference JP 1-02, *DOD Dictionary of Military and Associated Terms*, JP 3-35, *Joint Deployment and Redeployment Operations*, AFI 10-400, AFPD 10-4, and the CJCSM 3122-series for additional information on the use of JOPES to support deployment operations.

**2.3.1. (Added-AFSPC) AFSPC Pilot Units will report assigned UTCs to the MAJCOM Server NLT 25 February and 25 August each year.**

**2.4. Deployment Taskings:**

**2.4.1. Deployment Taskings.** The USAF deploys forces using AEFs on 90-day deployment periods (15-day rotation for ANG and AFRC units). The Aerospace Expeditionary Force Center (AEFC) coordinates the sourcing of supported component requirements in close coordination with providing commands (MAJCOMs/FOAs/DRUs). (See AFI 10-400) The AEFC's Scheduling Integrated Process Team (SIPT) schedules aviation forces and the Expeditionary Combat Support Integrated Process Team (ESSIPT) schedules combat support forces. The AEFC sponsors initial and subsequent planning conferences (as required) prior to the AEF's 60-day preparation period.

2.4.1.1. UTC Tasking System: The Air Force-Wide UTC Availability and Tasking Summary (AFWUS) (part of the WMP System) is the system of record to record the UTC taskings of wings/units and to provide Air Force planners with a list of USAF UTCs available for tasking. MAJCOMs must disseminate this UTC availability information to their wings/units to ensure the units know what UTCs they are tasked to support. Other documents that define UTC taskings are OPLAN TPFDDs and CONPLANs with TPFDDs, Functional Manager Letters and Designed Operational Capabilities (DOC) Statements. **NOTE: The AFWUS lists which unit will provide UTC(s). DOC statements define what UTC(s) a unit is designed to support and the Mission Capability (MISCAP) statement define what specific capability the UTC(s) can provide**.

**2.4.1.1.1. (Added-AFSPC) HQ AFSPC/XPF will provide each Wing Plans Office, IDO, and HQ AFSPC/LGXP with the current AEF TPFDD on a monthly basis. This document will be considered the source document for all AFSPC wing taskings to include tenant units. *Note*: AFRC units will receive their taskings from HQ AFRC/DOZ.**

2.4.1.2. Upon receipt of tasking documents: As a minimum, Wing Plans, or equivalent, will provide plan-tasking information to the IDO. The IDO, in conjunction with tasked units, will read the concept of operations, basic plan, and tasking for any installation unit, to include host, tenant and Geographically Separated Units (GSUs). The IDO will compile current relevant intelligence and additional information on the nature and timing of the deployment.

2.4.1.3. Identify and validate all installation taskings, to including host, tenant, and Geo-graphically Separated Units (GSUs). Validation includes: reviewing MISCAPs for all tasked UTCs, reviewing UTC equipment and personnel requirements, and identifying and reporting all deficiencies to the appropriate MAJCOM Functional Area Manager (FAM). The MISCAP is simply a

statement of the capabilities of the force identified by each UTC consistent with AFMAN 10-401, Vol 1. Do not include crew ratios and monthly flying hours in UTC MISCAPs, reference War Mobilization Plan, Vol 5, Basic Planning Factors & Data, for such planning data and factors. The UTC FAM at the MEFPAK responsible command is responsible for writing the MISCAP.

2.4.1.4. Determine deployment bag requirements, based on most stringent requirements on an annual basis. MAJCOMs will provide guidance for requirements computation and coordination.

**2.4.1.4.1. (Added-AFSPC) The IDO will identify total AEF and MTW requirements separately to the host Chief of Supply (COS) NLT 1 October. Out of cycle updates are required to reflect authorization changes that exceed the back-up variance. AFSPC tenant units will follow guidance provided by the host IDO to identify requirements. Calculate minimum requirements for deployment bags for each unit's most stringent OPLAN/ AEF TPFDD tasking. If a unit has an OPLAN tasking and the same UTC is also required under AEF, the unit will identify one bag per position tasked. If the unit has two separate and distinct UTCs, one tasked under AEF, and one tasked under MTW, then one bag will be authorized for each separate UTC position. Deployment bag authorizations will equal requirements plus a required back-up IAW AFM 23-110, Vol II, Part II, Chap 26, *USAF Supply Manual.* NOTE: AFRC units will follow procedures outlined in AFRCI 10-405, *Mobility Bag/Equipment Management for AFRC Units.***

2.4.1.5. Determine weapons and ammunition requirements, based on most stringent requirement on an annual basis. MAJCOMs will provide guidance for requirements computation and coordination.

**2.4.1.5.1. (Added-AFSPC) The IDO will ensure units tasked with weapons requirements are identified to the host COS, and HQ AFSPC/LGX, annually (October) or when there are significant changes to unit taskings. One weapon for each overseas tasked deployment position, M-16 for enlisted and 9mm handgun for officers (unless otherwise specified by functional directives), is identified per AFPD 16-8, *Arming of Aircrew, Mobility and Overseas Personnel.***

**2.4.1.5.2. (Added-AFSPC) The IDO will ensure units tasked with ammunition requirements are identified to the Munitions Accountable Systems Officer (MASO) and HQ AFSPC/LGX, annually (October) or when there are significant changes to unit taskings. These requirements are based on total weapons requirements identified to support tasked personnel. Stored quantities of ammunition will be determined using AFCAT 21-209, *Ground Munitions, Part 3.* Individual unit or central base munitions accounts must be established to store tasked munitions.**

2.4.1.6. Determine 463L pallet and net requirements on an annual basis.

2.4.1.7. Provide the Medical Group deployment immunizations requirements as identified in AFJI 48-110 and unique immunization and disease prevention requirements (i.e., malaria, anthrax, prophylaxis, insect repellents, bed netting, safe food and water sources as determined by medical intelligence analysis.

2.4.1.8. Direct Logistics Plans and Manpower to develop LOGMOD and MANPER planning files for use in the Integrated Deployment System.

**2.5. Logistics Plans Development and Management:**

**2.5.1. Integrated Deployment System (IDS):**

2.5.1.1. The use of IDS is mandatory for all deployments. The IDS is the automated tool used for wing level deployments and contingency operations that includes the following: LOGMOD/ Stand Alone LOGMOD, MANPER-B, Cargo Movement Operations System (CMOS), and Computer Aided Load Manifesting (CALM). Deploying unit cargo and passenger information is consolidated in LOGMOD and passed electronically to CMOS by the Wing Plans/Logistics Plans function to provide ITV information to USTRANSCOM's Global Transportation Network (GTN). **NOTE: If CMOS is not available, AMC aerial port automated information systems may also be used with IDS component systems to meet in-transit visibility requirements**. **Additionally, the development of a passenger manifest through IDS is not required for commercially ticketed passengers.**

**2.5.2. Maintaining UTC Equipment and Personnel Detail Data:** Logistics Plans function will maintain unique deployment planning data for all taskings.

2.5.2.1. Units will develop and maintain separate LOGPLAN files containing all UTCs listed as available for tasking by the AFWUS UTC listing and their MAJCOM extract of the AFWUS, OPLANs, CONPLAN, and AEF taskings. Units also may build separate LOGPLAN files to support local exercise or contingency plans. Units will use Pseudo Plan Identification (Pseudo PIDs) IAW AFMAN 10-401, Vol 1. Unclassified LOGPLAN Pseudo PIDs are available through the MAJCOM LOGMOD Manager. Execution (LOGMOD DSOE ID) Pseudo PIDs are maintained and published by HQ USAF/XOXW.

2.5.2.2. The starting point for determining deploying unit equipment is the standard LOGDET found in LOGFOR. Logistics Plans will copy UTCs from LOGFOR into LOGPLAN to build LOGPLAN PIDs.

2.5.2.3. Under no circumstances will units load actual classified PIDs in LOGMOD (LOGPLAN or DSOE).

**2.5.3. Tailoring UTC Logistics Detail in LOGPLAN.** Tailoring is the process of making a generic capability fit a specific purpose, region or CINC instruction. MAJCOM Functional Managers are the approval authority for any tailoring action. Tailoring must either be directed by the MAJCOM FAM or based on an approved planning document (OPLAN/CONPLAN TPFDD, AEF planning conference, Base Support Plans, Exercise Support Plans, Site Surveys, etc.). AEF lead wings in collaboration with supporting wings/units will use LOGMOD's LOGPLAN Module to tailor equipment for AEF deployments. LOGPLAN files can be easily passed to the lead wing, the wing/units currently deployed, and to the various supporting wings to assist in the collaborative process to ensure the right capability is provided at the right time in the right way to meet the mission and to refine/reduce the deployment footprint.

2.5.3.1. Tailoring must not change the mission capability of an UTC as described in the UTC MISCAP.

2.5.3.2. Adding equipment items to LOGPLAN is prohibited unless the item has been added to the standard UTC by its Pilot Unit and approved by the USAF Functional Area Manager for that UTC or contained in an approved Allowance Standard for that UTC.

2.5.3.3. Non-equipment items may be added to LOGPLAN if they are required to directly support the mission specified in the Mission Capability (MISCAP) for the UTC.

2.5.3.4. Tailoring must not cause the gross movement weight of the LOGPLAN UTC to exceed the standard LOGFOR UTC. USTRANSCOM and AMC currently plan airlift requirements based on the standard LOGFOR UTC weight and cube reported to JOPES on a quarterly basis. Compare LOGPLAN UTC weight to LOGFOR weight quarterly to ensure compliance. Exception: If units bulk-ship small arms (M-16/M203, M-60 etc) weapons, small arms ammunition, deployment/ mobility bags, and expendables, then they may add these weights to the LOGPLAN file. The weight of these items will not be counted against the UTC when comparing the gross transportation weight to the LOGFOR UTC. These differences will be reported in JOPES during crisis action planning when unit LOGPLAN/DSOE files are imported into JOPES through COMPES and eventually through DCAPES. Reference **Attachment 9** for unit level UTC reporting process. Make every effort to bulk ship mobility bags and weapons.

**2.5.4. Pre-Planned Load Plans.** Logistics Plans function should maintain pre-planned load plans for LOGPLAN Plan Identifications (PIDs). Creating pre-planned load plans is an ideal training tool for member of the deployment team. However, MAJCOMs will determine if pre-planned load plans are mandatory for their wings and will specifiy the type transportation mode and means their wings will use to develop these load plans. As a minimum, pre-plan the first four chalks based on a prioritized flow of personnel and equipment needed to generate and provide immediate combat capability and/or humanitarian support capability upon arrival at the deployed location. For aviation units, several LOGPLAN files must be maintained representing the most likely taskings. For example, a 24 Primary Assigned Aircraft (PAA) fighter squadron might maintain a LOGPLAN file for a 24 ship aviation package, 18 ship aviation package, 12 ship aviation package, and a 6 ship aviation package. For non-aviation UTCs, maintain LOGPLAN files for the most likely taskings. The OPLAN/CONPLAN TPFDD priority flow must be reflected in each LOGPLAN PID. Units will prioritize the out-movement of equipment using both Deployment Echelon codes (See ATTACHMENT 3, JCS Pub 6, Vol V, part 4, MEFPAK or LOGMOD System Help and LOGMOD Users Guide.) and the Movement Priority Fields in LOGPLAN. NOTE: Use Deployment Echelon codes in deliberate planning and use Movement Priority Fields during crisis action to reflect changing requirements at execution. These are mandatory entries in LOGPLAN that improve connectivity between LOGMOD and other IDS components. Transportation Control Movement Data (TCMD)/Computer Aided Load Manifesting (CALM) data is required for LOGPLAN files.

**WARNING**: **LOGMOD is an unclassified system. At no time, will units use the classified OPLAN PID for the LOGPLAN PID/DSOE ID. HQ AF/XOXW produces an approved OPLAN to Pseudo PID table. This table is found electronically in COMPES and is available at MAJCOM home pages on the SIPRNET. (Example, AMC's classified website.)**

2.5.4. **(AFSPC) The requirement for pre-planned load plans is not mandatory by AFSPC UTC Tasked Wings.**

**2.5.5. AF 463L pallets.** AF 463L pallets are the mandatory cargo packing platform for the Air Force standard LOGDET because they are the most versatile for aircraft load planning. However, pallets with container attached/palletized container (Internal Slingable Units (ISUs)) may be used as a suitable substitute for 463L pallets in unit LOGPLAN development. Pallets with container attached or palletized container (ISUs) are not considered WRM and must be purchased at unit expense. Units must maintain all UTC LOGFOR 463L pallet and net requirements as WRM equipment. If containers or palletized containers are used, units must the able to meet airlift constraints and must not exceed the

weight and cube of the standard LOGFOR UTC. Units with a minimum amount of equipment should continue to use 463L pallets.

**2.5.6. UTC Shortfalls.** Unit commanders will identify UTC shortfalls and corrective action annually, or as required, to the IDO. During execution, use LOGMOD to the maximum extent possible to identify shortfalls electronically to the IDO.

**2.6. Maintaining Manpower and Personnel Data:**

**2.6.1. Wing Manpower Office (Military Personnel Flight for ANG/AFRC units)** will use MANPER-B to maintain the MANFOR UTC File. The Wing Manpower Office will build a base unique Plan ID containing all UTCs listed as available for tasking by the MAJCOM UTC listing. This plan must maintain Deployment Echelon and Deployment Sequence for out-movement priority of personnel. Tailoring of personnel requirements is not allowed. This information will be provided to the IDO, UDM, and Military Personnel Flight, as required.

2.6.1.1. OPLAN manpower taskings will be provided by the MAJCOM and maintained separately. Recommended changes to these requirements will be coordinated through the IDO, UDM and Military Personnel Flight prior to presenting it to the parent MAJCOM.

2.6.1.2. The base Military Personnel Flight uses MANPER-B to maintain the Personnel Resource File and personnel assignments to execution deployment requirements, and provides this information to the IDO, UDM, and transportation function, as necessary. This is normally accomplished through an interface within IDS.

2.6.1.3. Manpower Office uses COMPES to link MANFOR details to the tasked UTCs downloaded from JOPES in order to pass the tasked UTC to the wings/units.

2.6.1.4. Manpower Office conducts a Unit Manning Document (UMD) MAJCOM UTC tasking validation to determine if MAJCOM functional area managers (FAM) taskings exceed wing/unit UMD.

2.6.1.5. Manpower Office validates UTC, AFSC, FAC, and PAS codes with tasked unit(s) and coordinates corrective action required with the unit and or designated UTC Pilot Units.

2.6.1.6. Manpower Office will receive Deployment Echelon and movement priority sequence (Deployment Sequence) from the Logistics Plans function/IDO to build the deliberate MANPER-B plans data if TPFDDs are available. If TPFDDs are not available, the Logistics Plans function will provide PID, UTC(s), ULNs and RDD, Deployment Echelon and Deployment Sequence Number. Manpower Office is responsible for coordinating with tasked unit(s) Unit Deployment Manager(s) to validate remaining MANPER-B data (i.e. PAS codes, tasked AFSCs FAC codes etc.) and coordinated required changes as needed through designated Pilot Units. Provide a courtesy copy to the IDO and Logistics Plans function.

2.6.1.7. The Unit Deployment Manager(s) will validate MANPER-B UTC data to ensure tasked AFSCs are assigned against the correct PAS and FAC codes, and will coordinate movement priority requirements through the Logistics Plans function/IDO as needed. UDMs will ensure their unit taskings do not exceed their UMD and they will coordinate corrective action though the Manpower Office for resolution.

**NOTE:** ANG and AFRC units are not authorized a Manpower Office; therefore, the Military Personnel Flight chief or Military Personnel Flight commander performs these responsibilities. Processing procedures for MANPER-B are documented in AFI 38-205, AFI 10-215, and AFCSM 10-626, Vol 2.

**2.7. Deployment Organizational Structure.** The IDO must define an effective and efficient organizational structure to meet all command and control, cargo and personnel processing requirements for the installation's most stringent tasking. Establish a Deployment Control Center to serve as the installation's focal point for deployment operations, command and control requirements. Identify requirements for the DCC, CDF, PDF and UDCCs to the appropriate base agencies for staffing and infrastructure support. The IDO is responsible for standing up the DCC, CDF, PDF, and UDCCs to meet the requirements of a given deployment scenario.

2.7. **(AFSPC) Manning for deployment work centers will be based upon the installation's requirement to support their most stringent AEF/OPLAN taskings.**

**2.8. Deployment Control Center (DCC):**

**2.8.1. DCC Responsibilities.** As the focal point for all deployment operations, the DCC must ensure the installation meets all deployment command and control requirements. The DCC is the installation focal point for identifying, validating and distributing tasking and information at execution.

**2.8.2. DCC Manning.** Recommended DCC positions include IDO, Logistics Plans, Personnel, Transportation, DSOE Monitors, Supply, Admin, Pre/Final-Load Planning, runners, and selected unit representatives. Training for each of the work centers will include a thorough knowledge of this AFI, local procedures, and functional expertise in their respective Air Force specialty code (AFSC)/function.

**2.8.3. DCC Requirements:**

2.8.3.1. Robust communications in the DCC is essential for positive control. Minimum IDS communications requirements include access to SIPRnet, NIPRnet, secure and unsecured telephones, secure and unsecured facsimile (fax). DCC personnel require a GCCS terminal to access JOPES, DCAPES, LOGCAT, LOGFAC, secure web sites, collaborative decision support tools and other planning aids. DCC key staff should be provided with land mobile radios (LMRs) and cell telephones, when available. Additionally requirements included uninterrupted power and classified storage. Video surveillance of marshaling yards and aircraft loading operation areas is optional, but desired if direct line of sight of these areas is not available from the DCC.

***NOTE:***

LOGMOD requires T-1 LAN connectivity to all Unit Deployment Managers facilities and to the long haul, wide area network.

**2.8.3.1.1. (Added-AFSPC) Secure Internet Protocol Router Network (SIPRNET) connectivity must exist within the DCC and/or the Logistics Plans Office as determined by the IDO. Requirements for SIPRNET will be in accordance with FINPLAN procedures as identified in this supplement, paragraph 1.4.1.1.1. (Added-AFSPC). The DCC, along with the other deployment support functions/workcenters will operate utilizing uninterruptible power capabilities (back-up generator) for continuous operations, as determined by the IDO. These areas should be considered a high facility priority when the Base Civil**

**Engineer (BCE) develops the Installation Facility Prioritization List for deployment/contingency operations.**

**2.9. Cargo Deployment Function (CDF):**

**2.9.1. Cargo Deployment Function Responsibilities.** The CDF is responsible for all transportation actions required to deploy equipment/cargo, including arranging on-base transportation requirements to support deployment activities. When an Aerial Port Squadron operates CDF, the local ground transportation squadron, or equivalent, is responsible for arranging on-base transportation requirements. The CDF is also responsible for all actions necessary to receive, marshal, load plan, manifest, and load cargo aboard deploying aircraft or vehicles. Training will include this instruction, local deployment management documents, and, more importantly, functional expertise in their CDF duties.

2.9.1.1. Final Load Planner(s). Develop final load plans. Ensures aircraft Allowable Cabin Load (ACL) is fully utilized. Qualified air load planners are required to accomplish this complex task. **NOTE: Load planners must attend AMC Affiliation Course and are required to be trained IAW AFJMAN 24-204*, Shippers Certification of Dangerous Materials*, to become a certified load planner. Load planners are taught safety and aircraft utilization.**

2.9.1.2. Quality Control: Ensures all documentation is correct, adequate, posted, protected and processed properly and that all equipment/materiel is properly configured for transport.

2.9.1.3. Controllers: Manage status of cargo.

2.9.1.4. Cargo In-Check: Responsible for verifying that equipment has been received for processing and passed the inspection checklist for transport.

2.9.1.5. Cargo Marshaling: Responsible for the placement of cargo in deployment order.

2.9.1.6. Cargo Manifesting and Documentation: Responsible for verifying cargo documentation is correct and for passing information to load planners. Accurate data in CMOS, along with correct documentation in the form of a MILSTAMP compliant manifest, are critical to ensure ITV.

2.9.1.7. Load Teams: Transport, load, and secure cargo.

2.9.1.8. Ramp Coordinator: Ensures effective coordination of all aircraft and vehicle loading operations for the IDO.

**2.9.2. CDF Requirements.** As a minimum the CDF requires: Suitable Materiel Handling Equipment (K-Loaders, Forklifts, Tow Vehicles, etc.), fixed or portable scales, approach shoring material, portable lighting, marking equipment for classified and hazardous equipment holding areas, uninterrupted power (generator), and robust communications (including telephones and LMRs, as required, and the correct ADPE). Minimum T-1 LAN connectivity is required to support applicable components of IDS.

**2.10. Personnel Deployment Function (PDF):**

**2.10.1. PDF Responsibilities.** Paragraph 1.5.12, **Attachment 1**, and AFI 10-215 contained further, detailed information on the PDF.

2.10.1.1. As a minimum, the PDF must establish Deployment Eligibility and Immunizations stations.

2.10.1.2. PDF may establish the following optional personnel processing stations:

2.10.1.2.1. Record of Emergency Data Card, DD Form 93.

2.10.1.2.2. ID Tags & military & civilian ID cards, Geneva Convention cards, passports & Visa.

2.10.1.2.3. Finance.

2.10.1.2.4. Legal

2.10.1.2.5. Chaplain

2.10.1.2.6. Family Support

2.10.1.2.7. Services (In-Flight Kitchen)

2.10.1.2.8. Baggage Handling

**2.10.2. PDF Requirements.** As a minimum, the PDF requires: uninterrupted power (generator); robust communications (telephones and LMRs, as required, and correct ADPE and LAN connectivity to support applicable components of IDS); secure LAN (SIPRnet) for access to MANPER-B, GCCS and secure web sites; classified storage; adequate briefing and passenger holding facilities; adequate baggage handling facilities.

## 2.11. Unit Deployment Control Center (UDCC):

**2.11.1. UDCC Responsibilities.** The UDCC is responsible for coordinating all unit level deployment activities to include receipt of taskings, preparation of cargo and preparation of personnel for deployment. Once activated, UDCC will not deactivate without prior coordination with the IDO and the DCC.

2.11.1.1. Only trained, qualified Unit Deployment Managers will man the UDCC.

**2.11.2. UDCC Requirements.** The UDCC requires the following infrastructure: uninterrupted power; robust communications (telephones and LMRs, as required, and the correct ADPE and LAN connectivity to support applicable components of IDS); access to secure facsimile; access to STU III or equivalent; access to classified storage

2.11.2.1. Secure LAN (SIPRnet) for access to GCCS and secure web sites. This capability is desired, but not yet required at the unit to meet CJCS objective of providing unit specific data rapidly to JOPES to build a TPFDD in 72 hours: Until the SIPRnet can be extended to all squadrons, use the guidance in **Attachment 9** to meet the CJCS objective using IDS and COMPES/DCAPES.

2.11.2.2. Maintain approach shoring material for the unit's equipment and identify this material within their Load and packing Lists to account for the additional weight of this material.

## 2.12. Developing the Deployment Operations Process.

**2.12.1. Installation Deployment Plan (IDP).** The Installation Commander through the IDP defines the local processes, procedures, infrastructure and resources used to deploy forces. The IDO develops the IDP for the Installation Commander. The IDO must analyze inputs from all assigned units (including collocated, tenant and transient units) and develop local operations guidance on how units will deploy from the installation. The IDP must contain detailed deployment guidance that reflects

the installation's current deployment processes and mission. The IDP must describe the who, what, when, where, and how the installation meets each basic deployment requirement.

2.12.1.1. As a minimum, the IDP must address the following areas: deployment roles and responsibilities, pre-execution procedures, deployment work-center organization and facilities, Unit Personnel and Equipment Assembly Areas, Cargo Marshaling Yards, installation-level passenger and cargo processing facilities/locations, execution procedures, weapons and ground safety concerns (including ORM usage), deployment training requirements, and deployment process flowcharts.

2.12.1.2. Identify process and physical choke points and provide guidance on how to eliminate them or reduce the impact reduce them on the deployment operations

2.12.1.3. Reference AF/ILXX Deployment Home Page, for a sample IDP format,

http://www.il.hq.af.mil/ilx/ilxx/deploy/index.html

**2.13. Developing Deployment Education Programs.** The IDO has overall responsibility to ensure each installation establishes a local deployment education program to ensure all personnel fully understand the deployment process, are properly trained to function as deployment workcenter augmentees, and are aware of proper procedures for preparing unit personnel and equipment for deployment.

**2.13.1. Deployment Education and Training Requirements.** The deployment training and education program must address the following areas:

2.13.1.1. Educate commanders and UDMs on their responsibilities in ensuring their units properly prepare personnel and cargo for deployment.

2.13.1.2. Develop a formal training program for UDMs, augmentees and other unit personnel, ensuring all personnel understand the deployment process and the proper preparation of personnel and cargo for deployment.

2.13.1.3. Develop a formal training program for use of IDS. IDS and LOGMOD Computer Based Training and material should be used to support the wing/unit initial and recurring training programs. **NOTE: Computer Based Training for IDS and LOGMOD, users manuals, and lesson plans are available from the LOGMOD WEBSITE http://www.ssg.gunter.af.mil/logistics_module/. Additionally: ANGRC/LGX and AFRC/LGX are responsible for providing IDS component training to their respective units, unless otherwise provided by the gaining MAJCOM. NOTE: IDS training is best accomplished by using scenario based, hands-on desk-top exercises lead by the IDO and Wing/Logistics Plans, involving UDMs, Transportation, Manpower and Personnel functionals once per month.**

2.13.1.4. Develop a formal training program for deployment work center supervisors and augmentees, ensuring all personnel understand the deployment process and their work centers responsibilities in the process.

2.13.1.5. A successful deployment education and training program is critical to a well-tuned deployment process. This is especially critical since augmentees accomplish many duties during deployment processing. With the exception of selected positions, personnel required to support deployment functions are augmentees. Augmentee contingency/wartime duties are usually completely different from peacetime duties and require specialized training. Ensure specialized training normally associated with the deployment process are identified, documented, and addressed in

training. Augmentees are managed IAW the installation READY Program and AFI 10-217 (except for ANG/AFRC personnel).

2.13.1.6. The IDO, in conjunction with other essential agencies, will provide monthly deployment training status to the installation/wing commander. This will include overall deployment operations, specific deployment workcenter, individual augmentee task training, and unit deployment, and tenant unit training data. This will include number and types of deployment training classes held, numbers of trainees per class, number and percent of no-shows per class. This will be a coordinated product consolidated by the IDO with prepared inputs by those agencies providing deployment-related training to installation personnel.

# Chapter 3

# DEPLOYMENT EXECUTION

## 3.1. Crisis Action Planning and Execution

**3.1.1. Crisis Action Planning and Execution.** During crisis action planning and execution everything is subject to change. Once a situation develops, taskings and priorities and therefore OPLAN/CONPLAN TPFDDs will change. This affects what happens at installation and unit level. Deliberately planned data at all levels, including unit level, will change in some way. However, deliberate planning is not wasted, it is the natural starting point for crisis action planning. It is not the plan, it is what was learned during the planning process that is the key to success during a contingency.

## 3.2. Unit taskings/Warning or Alert Order Subprocess:

**3.2.1. Receive Order.** Warning and Alert orders are normally sent only to the MAJCOM headquarters and not directly to the wings. MAJCOM/NAF Crisis Action Team (CAT), battle staff (BS), or equivalent is responsible for retransmitting the order to the affected wings. This requires prompt action on behalf of the CAT/BSS since timely receipt of this order may not occur. MAJCOMs/NAFs receive information via secure telephone, message traffic or GCCS NewsGroups and pass that information to subordinate units using similar methods. Tasking information will flow from JOPES through COMPES/DCAPES to the tasked installations/units. There will often be information flow before an official warning or alert order. Host installation/wing command post will immediately notify, as a minimum, the IDO and host installation commander. Notify other personnel/agencies in accordance with local guidance**.**

**3.2.1.1. (Added-AFSPC) AFSPC wing logistics plans functions will receive Warning/Alert Order taskings through the HQ AFSPC Crisis Action Team (CAT)/Battle Staff utilizing GCCS News Groups. Information will also flow from the Joint Operations Planning and Execution System (JOPES) through Deliberate and Crisis Action Planning and Execution System (DCAPES) to the tasked installations/units.**

**3.2.2. Determine Possible Tasking.** The Warning or Alert order may not contain any specific taskings for a specific weapon system. Compare available plans for details of the warning or alert order for clues as to what may be coming. If the message contains actual UTCs or weapon systems identification, actual preparation movement actions may begin. Unless the pending action is in an area with no plan on the shelf, it may be necessary to read over the current plan for the AOR in question. Read the plan's summary, the basic plan, annexes C & D, as well as your functional annex.

3.2.2.1. The IDO will host a meeting to review the tasking and establish a concept of operations and concept of support (if enough detail is available). Members will include as a minimum, the IDO, personnel, supply, transportation, and tasked units. In addition, possible UTCs to be tasked will be reviewed and prioritized, and LIMFACs/shortfalls identified. An additional tasking review may be required when the actual tasking is received.

**3.2.3. Place Personnel on Standby.** Place personnel on standby IAW MAJCOM directives. The requirement for standby (recall if required) varies from MAJCOM to MAJCOM. If a known tasking is coming, personnel will be made available. Placing personnel on standby will allow maximum flex-

ibility in responding to whatever tasking is received. Follow the MAJCOM and installation/appropriate wing commander's direction for placing personnel on stand-by.

**3.2.4. Monitor Intelligence Activities.** The installation/appropriate wing commanders and the IDO will be kept current on intelligence information. The IDO will discuss with the Intelligence Office and Office of Special Investigations (OSI) the types of intelligence needed to support deployment operations.

**3.3. Shortfall/Limiting Factors (LIMFACs):**

**3.3.1. Review Shortfalls/LIMFACs.** Unit commanders will review shortfalls/Limiting Factors (LIMFACS) and update as required. The logistics plans function will review the shortfalls/LIMFACS of the affected units so any problems expected are known ahead of time.

**3.3.2. Shortfall Process.** Units will submit personnel and equipment shortfalls on the AF Form 4006, *Unit Deployment Shortfalls*. Report personnel shortfalls IAW AFI 10-215 and the Supported Command's reporting guidance/processing instructions and AEFC shortfall and reclama implementing guidance. These forms will be forwarded to the DCC as soon as possible during a deployment operation. When capable, LOGMOD may be used to automate the shortfall identification process, with documentation to follow, as required.

**3.3.2. (AFSPC) The IDO will submit shortfalls and limiting factors (LIMFACs) to the responsible HQ AFSPC UTC Functional Manager and the HQ AFSPC CAT when activated. Provide information copies to HQ AFSPC/LGX. *Note*: AFRC units will follow the guidance in AFRCI 10-101, *AFRC Wing Plans Responsibilities.***

3.3.2.1. To avoid classification issues on the AF Form 4006, do not include the plan identification (PID). The ULN should provide enough distinction to avoid confusion if multiple PIDs are executed simultaneously. Data from the form will be forwarded to the MAJCOM via DDN message unless otherwise directed. Only current copies of the AF Form 4006 will be used.

**3.4. Execute/Deployment Order Subprocess:**

**3.4.1. Receive Tasking.** Tasking messages will be addressed to the installation commander and appropriate wing commanders. Information addressees will include: IDO, Command Post, wing plans/logistics plans, current operations, tasked units, and the Military Personnel Flight's Personnel Readiness Function (PRF). The personnel requirements will flow from the MAJCOM to the base via MANPER-B. The Manpower office and PRF must ensure the IDO receives this information to assist him/her in the development of the Deployment Concept briefing and formulating the Deployment Schedule of Events (DSOE). If an agency other than the IDO, PRF, or Manpower office receives a tasking message and it is not addressed to the above agencies, a copy will be immediately provided to them. At this point, airlift flow information may be provided (if airlift is being used). **NOTE: The IDO and wing plans/logistics plans will be notified of deployment taskings, including individual taskings, if the tasking is in response to an OPLAN/CONPLAN Plan Identification (PID). The IDO must ensure individuals meet deployment timing and mode of travel as specified in the PID tasking.**

**3.4.2. Receive Movement Flow Schedule.** Wing Logistics Plans function will coordinate with its MAJCOM who will coordinate with USTRANSCOM's for airflow/surface movement information. For airflow, contact the Tanker Airlift Control Center (TACC).

**3.4.3. Initiate Recalls/Strength Reporting.** Recalls are initiated by the command post at the direction of the wing commander. The entire wing might be recalled or just a part of it. As a minimum, the IDO and DCC staff will be recalled or notified when the wing commander is notified. The IDO will alert the MPF Commander of the potential need for a PDF.

**3.4.4. Analyze Tasking and Assess Impact.** Compare the original OPLAN/CONPLAN tasking to the actual tasking and conduct a tasking review meeting if needed to ensure all units are aware of significant changes. Tasking messages will be provided as soon as possible to appropriate agencies. The DCC staff, who prepare the DSOE, need the tasking messages as soon as received and validated by the wing CAT/Battle Staff. Establish Reference Start Time and establish time of the Deployment Concept briefing.

**3.4.5. Provide Deployment Tasking Information to Units.** Installations (most fighter/bomber wings) using the concept briefing to pass information to tasked units, must have the briefing not later than 3 hours after Reference Start Time (RST). The concept briefing sets the tone for the deployment and ensures all deploying and support units understand the tasking, the deployment schedule of events, and critical employment site information that may affect the mission and health and safety of deploying personnel. If a formal concept briefing is not used, tasked units will be notified of all related deployment information as soon as possible to ensure they understand their tasking. Reference **Attachment 8** for Deployment Concept Briefing outline.

**3.4.6. Implement Installation Deployment Plan.** Once a deployment tasking is received, the base implements its deployment process IAW the IDP. Implementing the IDP will help to ensure all augmentees are available and will assist in activating the required workcenters with needed equipment and supplies to operate for 24-hour operations, as needed.

**3.4.7. Crisis and Contingency Command and Control Process.** Early in a crisis, the focus is on gathering and disseminating accurate information. In this vein, command and control is critical to important agencies such as the base command post, CAT/BSS, and the DCC. The most important part of this process is to keep the information flowing.

3.4.7.1. Activate BSS/CAT. Although each command and unit has its own BSS/CAT activation procedures, generally expect BSS/CAT activation in stages. When the unit gets the first indication of an impending action, BSS/CAT may begin performing a monitoring function. As action by the unit becomes more likely, BSS/CAT director should activate the full team.

3.4.7.2. Increase reporting. Theater CINCs are required to increase reporting requirements to keep the National Command Authority (NCA) informed of situation developments. The NCA makes a decision on the course of action (COA) to be taken and then passes it on to the military for execution. The tasking source may require units to increase reporting also.

3.4.7.3. Monitor status. A designated POC in each work center should provide status of deployment issues to the IDO who is responsible for status reporting to the BSS/CAT. LIMFAC/shortfall status should be reported, also. DSOE screens, status boards and other electronic media are helpful management tools for tracking deployment status.

3.4.7.4. Monitor tasking changes. Be prepared for changes! Due to dynamic situations, taskings, and priorities may change daily; even hourly. Beddown sites, number and type of aircraft, aircraft configurations, and so on can cause extensive changes to unit deployment efforts. In addition, functional area managers at the MAJCOMs may feel a particular unit tasking is valid and the high-

est priority. However, since airlift is a national asset and supports all services, airlift priority may be redirected to other services because of the Supported Command's priorities.

**3.4.8. Deployment Management Process.** Although this is a sub-process of the Execute/Deployment order, the importance of it warrants its equal attention. Deployment management requires all agencies responsible for deployment actions to work together to ensure all tasking are met. Deployment management requires solid command and control in order to operate. Proactive actions are required as reactive responses snowball and recovery becomes difficult. Usually the Deployment Organization is not fully activated until a base receives a tasking to deploy. The times to activate work centers aren't dictated so each base determines when to activate their work centers according to the situation at hand.

**3.5. Activate Deployment Functions/Centers.** The following paragraphs explain the purpose and suggested activation priority supporting the wing deployment process.

**3.5.1. Activate DCC.** Activate the DCC first to allow logistics planners time to translate taskings into the LOGMOD DSOE. The IDO will activate other work centers in enough time to begin accepting cargo and personnel for processing based on the DSOE. The DCC is the focal point for all deployment actions on a base and reports to the Battle Staff/CAT.

3.5.1.1. The IDO must establish lines of communication between higher headquarters, the battle staff, deployment workcenters, and the DCC, and between the DCC and tasked units. All information essential to deployment operations must pass through the DCC.

3.5.1.2. The IDO will use all available automated systems (e.g. JOPES, COMPES, IDS) to identify additional deployment data at execution.

**3.5.2. Activate Cargo Deployment Function (CDF).** The CDF will be activated when directed by the IDO. The OIC/NCOIC of the CDF will ensure all required resources are readily available to properly transport, receive, inspect, marshal, and load equipment to meet support transportation requirements. If joint air and surface operations are required, procedures will be clearly developed. Upon activation of the CDF all assigned personnel will be briefed on the nature of the deployment.

**3.5.3. Activate Personnel Deployment Function (PDF).** The IDO in coordination with the MPF Commander, activates the PDF. Once notified to activate, the Chief of the PDF will gather all PDF members and brief them on all information they have concerning the deployment and advise them when to set up the processing line.

**3.5.4. Activate Unit Deployment Control Centers (UDCC).** The UDCCs will be activated upon direction of the IDO (24-hour operations, if needed). Once notified to activate, the UDM will gather work-center members and brief them on all the information they have concerning the deployment and advise them when to set up the cargo/unit assembly areas. UDCC will deactivate after approval by IDO. Personnel deployment eligibility will be constantly monitored by UDMs to ensure required deployment positions can be filled by qualified individuals at all times. Units will attempt as early as possible to identify potential personnel eligibility problems in order to allow the PDF maximum time to try to find qualified personnel from base resources. If qualified personnel are not available on the base, the DCC will be notified so they can elevate the requirement to higher headquarters. In most cases, commanders can waive eligibility factor problems. When they cannot waive them, commanders will elevate those personnel issues or shortfall IAW applicable AEFC reclama and shortfall implementing guidance.

**3.6. Deployment Schedule of Events (DSOE).** The DSOE is the authority document that orchestrates the movement of personnel and cargo. Therefore, its accuracy must be carefully ensured. The DSOE and initial load plans need to be worked in conjunction. The DSOE must be created to ensure cargo and passengers meet departure times. DSOE will be created utilizing LOGMOD. DSOE should be based on the movement priority of the cargo and personnel. Ref LOGMOD Users Guide and system help files for information that is more detailed and sample DSOEs with recommended event times.

**3.6.1. Prioritizing and Monitoring Movement Outflow.** The IDO is responsible for managing the out-flow of cargo and personnel based on these guidelines:

3.6.1.1. Schedule personnel and cargo to flow through your deployment process in time to meet the departure of the deployment transportation. Deployment transportation is coordinated between the Supported CINC and USTRANSCOM and should be provided in time to meet the Supported CINC's TPFDD Required Delivery Date. Units will prioritize the out-movement of cargo and passengers in COMPES (minimum LOGPLAN) to meet the required delivery date specified by the supported CINC. The primary method of scheduling personnel and cargo is the LOGMOD DSOE. Units will use LOGMOD Stand-Alone as the backup method for the DSOE. If automated systems are unavailable, use the AF Form 2511, Deployments Schedule of Events Passenger and Cargo; and AF Form 2512, Deployment Schedule of Events Loading Schedule. Complete scheduled times of events depicted on these forms. The IDO may choose to schedule and track some or all of the events on the forms, depending on local requirements.

**3.6.2. Distributing the DSOE.** Once the schedule is completed, ensure all the key work centers and affected units receive the DSOE. Use either the LOGMOD Remote DSOE viewer capability or a distribution method that works best for an installation.

**3.6.3. Tracking DSOE Actions.** Personnel who work in the deployment work centers use the DSOE to track the actions required to ensure the people and equipment are processed and loaded on the support transportation (airlift, sealift, or vehicles) in time to meet their departure schedule.

3.6.3.1. A single POC from each work center will provide status to the DCC. This will ensure the LOGMOD DSOE is properly updated and if using status boards to track status, all boards in all work centers match.

**3.6.4. Updating the DSOE.** Taskings change, airlift changes, broken equipment causes something to move to a different load, etc., anything can cause changes to the DSOE. Make changes only when necessary and capture changes in the remarks. Distribute changes to all agencies immediately. All changes to the DSOE will come from the DCC to the units and work centers.

**3.7. Shortfall Process During Deployment Execution:**

**3.7.1. Replacement priorities.** UDM will determine replacement priorities and have unit commander verify by signing shortfall letter. Identify shortfalls as soon as possible through LOGMOD shortfall process. Reference Section C, Glossary of Terms, for definitions of shortfall. UDM or unit representative will fill vacancies using available unit personnel. UDM will prepare four copies of the shortfall letter (reproduced copies authorized) and distribute one copy of each to the following prior to close of the deployment concept briefing, if held, or as shortages occur:

3.7.1.1. UDM file copy.

3.7.1.2. DCC personnel representative (for Deployment Position Number {DPN} shortages) or supply representative (for equipment shortages). For assets not managed by supply, (i.e. munitions, medical supplies, vehicles), the appropriate base agency will track shortages in coordination with the DCC.

3.7.1.3. DCC logistics/unit representative file copy.

3.7.1.4. PDF (DPN shortage only).

**3.7.2. Replacement Data.** If vacancy cannot be filled by unit, DCC personnel/supply representative will fill from other base resources. If a replacement is found, DCC unit, personnel or supply representative completes replacement data. If vacancy cannot be filled, DCC personnel representative prepares a personnel shortage message; supply representative prepares an equipment assistance request. Personnel/supply representative notifies logistics representative and the IDO. Logistics plans representative will publish revised deployment schedule of events (DSOE) to reflect changes made.

**3.8. Managing Resources.** The DCC staff must ensure that the installation meets deployment taskings by identifying all deploying equipment and personnel. The DCC monitors all deployment activities and ensures the installation meets all requirements. Inform the tasking source of Shortfalls and Limiting Factors (LIMFACs) that the installation cannot fill locally.

**3.9. Deployment Reporting.** The DCC must update the installation's senior leadership during deployment operations as specified by local requirements. LOGMOD Remote DSOE Viewer may be used to support this requirement.

**3.9.1. Battle Staff/CAT.** Ensure the local Battle Staff/CAT has a macro level view of the status of your deployment activities.

3.9.1.1. The IDO will inform the Battle Staff/CAT if the installation can not meet a deployment tasking

3.9.1.2. The Battle Staff/CAT will notify parent and or gaining MAJCOM Battle Staff if the installation cannot fill a deployment tasking IAW applicable AEFC reclama and shortfall guidance.

3.9.1.3. The MAJCOM Battle Staff/CAT will coordinate with the Air Component and other MAJCOMs to meet the tasking.

**3.10. Reporting Deployment UTC Data to JOPES.** To support the CJCS requirement to develop a sourced TPFDD for the first seven days of a crisis within 72 hours, units will electronically transfer tailored LOGPLAN/DSOE files to the gaining MAJCOM for review and for processing into JOPES through COMPES/DCAPES. The tasking source specifies how and when to send the information. Reference **Attachment 9**.

**3.11. Collecting and Documenting Deployment Data:**

**3.11.1. Collecting & Documenting Deployment Data.** The IDO is responsible for ensuring deployment data is collected in accordance with this instruction, and maintained and disposed of in accordance with AFMANs 37-123, *Maintenance of Air Force Records*, and 37-139, *Records Disposition Schedule*, and AFI 37-138, *Records Disposition Procedures and Responsibilities*. Additionally, deployment, contingency, and military operations other than war (MOOTW) records, as they may be

of historical significance, must be identified and retained as permanent under AFMAN 37-139, Table 10-6. The IDO also compiles and analyzes data for trends to identify ways of improving the deployment process. Deploying unit commanders must also document deployment data to ensure comprehensive deployment analysis to improve unit deployment procedures. During deployments, the DCC is responsible for collecting and documenting deployment activity data. This is essentially handled by each deployed system and by unit logs. In LOGMOD/LOGMOD Stand-Alone, archive a copy of the Logistics Plan File and the DSOE file, in CMOS, archive the cargo and passenger manifest data. This data is of historical significance, required for trend analysis and process improvement, and will be maintained IAW AFMAN 37-123. Retain these reports under AFMAN 37-139, Table 10-6. Documentation of lessons learned will be accomplished using the Joint Universal Lesson Learned program and MAJCOM after action reporting requirements and AEF after action reporting IAW AFI 10-400.

3.11.1.1. The IDO will ensure the deployment process includes collection and maintenance of the following minimum documentation for deploying aircraft: passenger manifest, cargo manifest, equipment listings, hazardous cargo waivers, load plan and other documents identifying equipment and personnel aboard deploying aircraft, Shippers Declaration for Dangerous Goods, DD Form 2133, *Joint Airlift Inspection Record*, LOGMOD load and packing lists.

3.11.1.2. Create a historical DSOE report after each local deployment for use as a management tool and lessons learned.

# Chapter 4

## DEPLOYMENT EXECUTION, EQUIPMENT PREPARATION REQUIREMENTS

### 4.1. Equipment/Cargo Preparation:

**4.1.1. Equipment/Cargo Preparation.** The unit commander, or designated representative, oversees all unit equipment and cargo preparation in support of deployments. The commander must ensure units prepare and handle the cargo in accordance with DoD 4500.32-R, *Military Standard Movement Procedures (MILSTAMP)*; DoD 4500.9-R, *Defense Transportation Regulation (DTR), Part II* and *Part III*; AFI 24-201, *Transportation Management of Air Force Cargo*; AFJMAN 24-204, *Preparing Hazardous Materials for Military Air Shipments*; and Title 49, Code of Federal Regulations.

**4.1.2. Convoy Deployments.** Units that deploy by convoy must follow the specific cargo preparation requirements in AFI 24-301, Vol 1, Vehicle Operations, and AFI 24-204, Permits for Oversize, Overweight, or Other Special Military Movements on Public Highways in the United States.

**4.1.3. The Deployment Equipment/Cargo process.** This process ensures all equipment and cargo is properly identified, prepared, and documented (including appropriate customs documentation) before marshaling. This is a unit responsibility that usually completed in the unit area. As early as possible, units will identify equipment and cargo tasked for deployment and start all documentation (particularly HAZMAT) required. This process is an essential portion of the unit move.

4.1.3.1. Accountability Subprocess. Deploying activities are required to account for their deploying unit equipment through the Regional Supply Squadrons IAW AFMAN 23-110, USAF Standard Base Supply System.

4.1.3.2. Accountability of Deployed Equipment and Vehicles. Before execution, UDMs, through base supply, will identify deployment equipment and ensure the correct use codes and UTCs are assigned. This allows supply to prepare deployed custodian account/custody receipt listing (CA/CRLs) when required.

4.1.3.3. Deploying units ensure accountability of deployed assets. To do this, the deploying equipment custodian/vehicle control officer/NCO will identify deploying assets to base supply/vehicle operations. Provide a deployed CA/CRL and deployed vehicle listing for the deploying equipment custodian/VCO to highlight the deploying assets and quantities. Supply/transportation will then update their systems.

**4.2. Identify & Prepare Equipment and Cargo.** When preparing for deployments, units will refer to the squadron or shop LOGPLAN materiel list to ensure they have the required equipment. LOGPLAN materiel lists will be accurate and deploying equipment marked in advance (if possible). For cargo preparation, LOGMOD will be used to produce load and packing lists. Accurate load and packing lists are critical to ensure unit equipment is not be delayed by customs at entry into other countries.

**4.2.1. Identify & Document Hazardous Materials.** Units will maintain and provide a current sample Shipper's Declaration for Dangerous Goods form for each hazardous item, to include a HAZMAT certification authorization letter signed by the unit commander or a designated representative, to the base transportation flight. Base transportation function will review the forms for accuracy. A sample book for the CDF, load planning, and QC will be created as applicable.

**4.2.2. Prepare hazardous material shipments.** Prepare hazardous material shipments IAW AFJMAN 24-204 (49 CFR for surface shipments) and MILSTD 129. Ensure applicable Competent Authority Approvals (CAAs), Department of Transportation (DOT) exemptions, and packaging or compatibility waivers accompany shipments. Classified or signature service hazardous materials are identified by using a DD Form 1387-2, Special Handling Data/Certification, in addition to the Shipper's Declaration of Dangerous Goods. Also, ensure packaging, marking, and documentation capability exists for redeployment to home station. In addition, properly identify hazardous materials moved as individual issues aboard commercial contract aircraft IAW AFJMAN 24-204.

**4.2.2. (AFSPC) Units will provide (4) copies of the Shipper's Declaration for Dangerous Goods for local base exercises, and (8) copies of the Shipper's Declaration for Dangerous Goods for real world deployments. The additional (4) copies are utilized for redeployment efforts. The unit will provide (7) copies of the DD Form 1387-2, Special Handling and Data/Certification, when shipping Classified or signature service hazardous materials when participating in local base exercises, and (14) copies for real world deployment scenarios.**

4.2.2.1. Hazardous cargo information is located in the Transportation Control Movement Data (TCMD) located in the LOGMOD LOGPLAN files. Data is loaded by tasked units using the UDM-Module of LOGMOD/LOGMOD Stand-Alone.

4.2.2.2. Sensitive Cargo. Units must handle and ship classified material in accordance with DoD 5200.1-R, *Information Security Program Regulation*, and AFI 31-401, *Information Security Program Management*. AFI 31-401 also gives specific guidance on how to account for deployed classified material.

4.2.2.3. Move weapons and ammunition in accordance with AFI 31-209, *Resource Protection*, and DoD 5100.76-M, *Physical Security of Sensitive Conventional Arms, Ammunition, and Explosives*. All deploying units must appoint a weapons and an ammunitions courier to accompany/receipt for small arms and ammunitions requirements while in transit and be trained IAW DoD 5100.76-M. Also, see DoD 45090.9-R for further guidance.

4.2.2.4. Move hazardous material in accordance with AFJM 24-204, *Preparing Hazardous Materials for Military Air Shipment* and Title 49, Code of Federal Regulations.

**4.3. Equipment/Cargo Documentation.** Each increment of equipment/cargo must carry specific documentation in accordance with cargo preparation directives identified in the following paragraphs. Units must include these minimum forms of documentation/identification with each increment:

**4.3.1. Military Shipment Label, DD Form 1387, or approved suitable substitute.** As a minimum, the following elements of information will be used: Transportation Control Number (TCN), Origin (to include Stock Record account Number/DoD Account Activity Code (SRAN/DoDAAC), Aerial port of Embarkation (APOE), Aerial Port of Debarkation (APOD), Destination, Cube, Dimensions, Weight, Rear Axle Weight (RAW), Front Axle Weight (FAW), and Unit point of contact. If this information does not come from an automated system, then units will hand-write required information a DD Form 1387. Units will not write in blocks 1, 9, and 16 on the DD Form 1387. Units will place label in a waterproof envelop and securely attach the envelop to the deploying increment.

**4.3.2. Placards.** Placards will be on two adjacent sides of a pallet or one conspicuously placed on one side on rolling stock per DoD 4500.32-R, Vol I.

4.3.2.1. Placard will contain the following information:

4.3.2.1.1. Unit Type Code (UTC).

4.3.2.1.2. Other markings that identify the item

4.3.2.1.3. Measurements such as center of balance, weight, height, and so on, as specified by AFJI 24-108

4.3.2.1.4. Corrected bar coded placards will be generated by the units using LOGMOD. If the placard is incorrect during the JI process the placard will be corrected and re-generated using LOGMOD if time permits. For time critical situations the placards will be corrected and generated in CMOS.

4.3.2.1.5. Deployment Transportation Control Number (TCN). **NOTE: The TCN will include the ULN and Deployment echelon and increment number (automatically generated in LOGMOD DSOE module).**

4.3.2.1.6. Packing and load lists produced by the units must be accurate and be attached in weatherproof pouch with the pallet/container. **NOTE: Accurate packing and load lists are critical to enable equipment to pass host nations customs clearance procedures. Failure by the units to create accurate documentation can delay equipment arrival to the beddown location and seriously affect the mission.**

**4.3.2.1.6.1. (Added-AFSPC) Units will provide (4) copies of the LOGMOD generated packing and load lists for local base exercises, and (6) copies of the LOGMOD generated packing and load lists for real world deployment scenarios as outlined in Attachment 13. If the local LOGMOD server is down, units will use LOGMOD Stand Alone to produce the necessary packing and load lists.**

4.3.2.1.7. Specific HAZMAT information can be located in AFJMAN 24-204.

**4.4. Load Planning.** Load planners will use the Computer-Aided Load Manifesting (CALM) system to prepare load plans. However, proficiency in using manual load planning methods must be maintained in the event CALM is not available.

**4.4.1. Building Load Plans.** Build initial load plans in conjunction with the person building the DSOE to ensure a viable DSOE. **NOTE: When building load plans sequence the equipment and passengers to immediately support the mission at the employment location. The proper sequencing, combined with aircraft utilization and aircraft safety are essential.**

4.4.1.1. Ensure the equipment and personnel are properly sequenced based on priority flow, en-route support, and force/equipment mix needed to achieve initial operating capability at the beddown location as soon as possible. Whenever possible, units must combine small UTCs (such as the PERSCO, Logistics Plans, Contracting, Finance, Judge Advocate, Communications, etc.) on the same pallet or container to optimize lift resources by ensuring pallets and containers are fully utilized. When UTCs from different functions are combined, ensure a unit is identified as a “lead” for that pallet and prepares the appropriate documentation for the pallet. NOTE: When consolidating cargo increments, units will not combine the increments in LOGMOD, but will reflect in the chalk remarks block of the DSOE those increments that have been physically combined. The purpose for doing this is to maintain accountability for individual TCNs when passing data to CMOS for ITV. Consideration must be made for all modes of transportation to arrive at final destination.

4.4.1.2. Coordinate with the DCC before moving a piece of equipment/cargo from one load to another to ensure the move will not affect either en-route support or operations at the beddown location.

4.4.1.3. Ensure that cargo, personnel, aircraft, and load plan destinations are the same. Units will coordinate with the logistics planners to ensure the cargo is prioritized to meet the mission requirements at the deployed location.

4.4.1.4. Avoid placing all critical initial operating support equipment and personnel on the same aircraft/mode of transportation to prevent loss of capability if the mode is delayed or destroyed.

**4.4.2. Distribute Load Plans.** Once the load plans are accomplished, load planners ensure all essential players receive them. The following people and agencies need the indicated number of copies of load plans: aircraft commander (1-original), load team chief (1), DCC (1), station file copy (1) and Ramp coordinator (1), if applicable. The load plan is NOT the same as the cargo manifest. The Cargo Manifest (DD Form 1385) or its automated equivalent is the official manifest IAW MILSTAMP.

**4.5. Pallet Build-up.** Pallet profile for all aircraft (e.g., C-141, KC-10, Civil Reserve Airlift Fleet (CRAF)) will be considered when preparing cargo pallets. This may significantly reduce the possibility of further modifications at the time of actual loading. Consolidate small UTCs (such as PERSCO, Logistics Plans, Contracting, Finance, Judge Advocate, Communications, etc.) on the same pallet or container to optimize lift resources.

**4.5.1. Palletize baggage.** Baggage will be palletized for 20 or more passengers, for all C-5 and KC-10 aircraft. For these aircraft, when possible, load plan baggage pallets in pallet positions near the nose of the aircraft to expedite download at the final destination. Baggage pallets will follow the same height and contour restrictions as other pallets.

4.5.2. Any required shoring/dunnage will be provided by the unit and must be deployed with its associated equipment/pallet. Units deploying or redeploying are responsible for all cargo preparation to include providing special equipment operators; venting LOX carts, providing de-icer drivers, etc. NOTE: Units will load 04 as pallet dunnage for all pallet increment types in LOGPLAN. Pallet dunnage will always accompany 463L pallets during movement. The following movement characteristics are general with pallet dunnage; length 88 inches, width 4 inches, height 4 inches and quantity of 3. Dunnage National Stock Number (NSN) information can be obtained from the installation War Reserve Material Officer (WRMO) or by using the FEDLOG system.

**4.6. Deliver Cargo.** Document cargo movement requirements/responsibilities in local IDP. Cargo is delivered to the In-Check area as required by the DSOE. Units deliver rolling stock. If required, units contact Vehicle Operations to transport non-rolling stock. Units must arrange movement of cargo well in advance of required DSOE processing times to ensure on-time processing.

**4.7. Cargo Processing.** In-check/Weigh/Measure/Marshaling Cargo:

**4.7.1. The CDF will:**

4.7.1.1. Provide personnel to receive, in-check, jointly inspect, and load unit equipment. The CDF is a controlled area. CDF must have the capability to weigh and measure equipment.

4.7.1.2. Determine and comply with any special requirements or procedures that may be required to inspect explosives (e.g., EOD/SF loads usually require a separate holding area –"hot cargo pad" meeting all safety requirements).

4.7.1.3. Identify personnel to perform any "mobile" in-check requirements and ensure enough materials are available.

4.7.1.4. Augmentees will be made aware of hazards such as liquid oxygen (LOX) carts and explosives.

**4.8. Marshaling.** Marshaling is the orderly assembly of cargo (by chalk) to a location called the staging or call forward area. These locations will be identified as sterile areas to ensure the equipment is not "tampered" with (adding or deleting pieces). Entry into marshaling yard is controlled by the CDF. Identify these areas in the IDP.

**4.9. Joint Inspection of Cargo:**

**4.9.1. Joint Inspection (JI) of Cargo.** JI is the final inspection with both the owning unit representatives and/or cargo terminal representative, and the load plan-qualified Aerial Port representative (loadmaster, if necessary) before the load is accepted.

4.9.1.1. After the JI process is complete, equipment is set up in final chalk order and ready for loading. Ensure an experienced unit representative is readily available in case of discrepancies that may be fixed on the spot. As a minimum, a load plan (except for passenger and baggage information), and documentation requirements (corrected copies of hazardous materials (HAZMAT) certification forms) will be available.

4.9.1.2. Use quick fix teams (those unit personnel familiar with equipment or vehicles, documentation, and making on-the-spot decisions for correcting minor discrepancies) to eliminate last minute frustrations.

4.9.1.3. A frustrated cargo holding area will be identified for increments having discrepancies (documentation or improper preparation).

4.9.1.4. Notify the DCC immediately of all frustrated cargo, so proper action can be taken to resolve the problem. To expedite fixing discrepancies, each processing unit or the wing will have a "quick fix" team located in the CDF area.

4.9.1.5. Each unit will also have a representative (increment monitor) accompany the equipment to the in-check area that can resolve discrepancies or can communicate requirements to appropriate unit personnel until their cargo clears the JI. The tasked unit must have a team ready to immediately respond to resolve any discrepancies frustrating the cargo either as part of the quick fix team our to augment the quick fix team.

**4.10. Identify/Resolve/Elevate Cargo Frustrations:**

**4.10.1. Frustrated Cargo.** Frustrated cargo is cargo that failed the inspection at the in-check area and was set aside until it could be fixed by the unit.

4.10.1.1. Cargo frustration times are tracked because failure to fix a frustrated piece of cargo can delay the entire wing deployment schedule and affect a unit's capability to support the mission at the deployed location. Reliable communications between the DCC, CDF and tasked units are

required to ensure that the tasked unit can quickly be called to resolve cargo frustrations, if the unit quick fix team is not already pre-positioned in the CDF.

***NOTE:***

100 % of integrated container-pallets (like ISUs) will be opened and inspected by CDF personnel. Containers will be frustrated if they do not meet local transportation guidance for ensuring ISU type containers are packed effectively.

**4.11. Cargo Manifest.**

**4.11.1. Cargo Manifest Preparation.** It is essential that a manifest be prepared for each chalk to ensure in-transit visibility from port of origin to final destination. The individuals assigned to this function will be extremely knowledgeable of the requirements of DOD 4500.32-R. Cargo load plans cannot be used as cargo manifests.

4.11.1.1. Either CMOS or AMC systems will be used to generate the cargo manifest. If CMOS or AMC systems are not available to produce the manifest, a DD Form 1385 is used. It is imperative that the UDMs ensure all of the required TCMD data (e.g., transportation trailer data for HAZMAT, sensitive, classified, etc.) is accurate and loaded in LOGMOD. Required information will be exported to CMOS or AMC systems from LOGMOD. CMOS or AMC systems will feed cargo and personnel manifests to GTN to provide in-transit visibility.

**4.12. Loading:**

**4.12.1. The Cargo Deployment Function** loads unit equipment and baggage. For specific guidance on how to load aircraft, consult AFJI 24-108 and the applicable aircraft -9 Technical Order (TO).

4.12.1.1. Experienced load teams are important to ensure all support transportation departs on time.

4.12.1.2. Load team chiefs will ensure all members are familiar with the load plan and everyone on the team understands their specific responsibilities. The load team chiefs will check with the ramp coordinator (RAMPCO) or OIC/NCOIC of the CDF if a load plan is not available at least 45 minutes before load time.

4.12.1.3. All loads will be ready to load NLT 30 minutes before scheduled load start time.

4.12.1.4. Units must provide qualified drivers for specialized vehicles (e.g., Reserve all-terrain transports [RATTs], ATVs, etc.).

**4.13. Aircraft Commander Briefing.** The Aircraft Commander must be briefed on the specifics of the load to include all hazardous materiel before takeoff.

**4.14. Ramp Coordinator (RAMPCO).** RAMPCOs are the “key ingredient” for ensuring a successful command and control element exists between flightline activities and the CDF. These individuals are responsible to the CDF for overseeing and coordinating all aircraft and vehicle loading operations IAW the DSOE and will work closely with the CDF and PDF to ensure all facets of airlift support are met. In short, they will be the “eyes and ears” of the CDF. RAMPCOs will carefully monitor their assigned loads from marshaling complete time until the aircraft or truck departs. During this time, the RAMPCO will be proactive to ensure unexpected “glitches” are promptly corrected to prevent any loading delays. As a

minimum, RAMPCOs will visually check their load for any obvious discrepancies (leaks, missing placards, weights, etc.) before aircraft arrival. In addition, they will be familiar with all the characteristics of the load (HAZMAT, documentation requirements, required waivers, etc.).

**4.15. In-Transit Visibility.** Air Force automated systems that comprise the Integrated Deployment System (IDS) must be used to support the deployment process. IDS is composed of LOGMOD, MANPER, CALM and CMOS. Deployment files from LOGMOD and MANPER will be passed to CMOS to achieve in-transit visibility. Transportation Movement Offices must use CMOS to maintain cargo in-transit visibility. CMOS will pass the movement data to the Global Transportation Network (GTN). Guidance on the use of CMOS can be found in AFI 24-201, Chapter 15, paragraphs 15.1 and 15.4. Training for CMOS can be downloaded from the following web site: http://www.ssg.gunter.af.mil/cmos/

***NOTE:***

If CMOS is not available, AMC aerial port automated information systems may also be used with IDS component systems to meet in-transit visibility requirements.

# Chapter 5

## PERSONNEL PREPARATION AND DEPLOYMENT EXECUTION REQUIREMENTS

### 5.1. The People Process:

**5.1.1. The People Process.** This section provides valuable information concerning the processing of personnel, for pre-planning and execution, and the processing activities supporting the personnel deployment process. The Deployment Requirements Manning Document (DRMD) generated by MANPER-B dictates the personnel taskings the unit must prepare for an execution deployment and is an essential element of the Personnel and Manpower communities supporting total force accountability. To this end, Manpower and Personnel at all levels facilitate the effective communication and coordination of executed TPFDDs, OPLANs, and any contingencies by translating the TPFDD into a DRMD and validating whether the force mix and organization structure will accomplish the intended mission. They are critical elements in manpower requirement and resource accountability demanded by Congress and senior Government leadership. As a minimum, there should be one Manpower and one Personnel representative on every "close hold" list.

**5.2. Air Force Deployment Planning and Execution Concept.** Air Force unit deployments normally occur after a Movement Day (C-Day) is established. (Note: AMC's Global Reach Lay Down forces move well before C-Day). Since planning assumptions, response options, and mobilization timing varies depending on the execution scenario, units may not move as a single UTC entity. Transportation constraints, reception capabilities, and operational concepts dictate the final closure rate of the deploying force to the destination.

**5.2.1. Deployment Tasking Requirements.** All deployment tasking requirements for a particular contingency, exercise, or deployment are consolidated into a single document called the Deployment Requirements Manning Document (DRMD). This document is a critical element of the deployment process for personnel and manpower functions. It provides MAJCOM, NAF, and wings the requirements for fulfilling exercise, deployment and contingency requirements. It is important because it provides the wing all their requirements for the exercise, deployment, or contingency. Failure to understand the DRMD and what to do with it causes problems throughout the process. Chapter 4 of AFMAN 10-401, Vol 1, gives the specific details on the data elements of the DRMD. The DRMD is vital to mission success.

**5.2.2. Deployment Requirements Manning Document.** The DRMD is transmitted to the base from the Supported Command using Data Pattern Traffic (DPT) to the Manpower Office and Military Personnel Flight (MPF) Personnel Readiness Function (PRF). This process varies from base to base; however, the bottom line is that the DRMD is required by the Personnel Readiness function at the Military Personnel flight to move forces. The DRMD has nine key and essential pieces of personnel deployment tasking information, they are:

5.2.2.1. Plan Identifier (PID).

5.2.2.2. Unit Line Number (ULN).

5.2.2.3. ULN Position Number.

5.2.2.4. Position Number Suffix.

5.2.2.5. Air Force Specialty Code (AFSC).

5.2.2.6. Unique qualifications.

5.2.2.7. Tasked PAS.

5.2.2.8. Date-Required-In-place (DRI).

5.2.2.9. Duty Location (DLOC).

5.2.2.10. Every contingency, deployment, or exercise tasking built, created, and flowed contains this necessary information and other data elements relevant to the process.

**5.3. Assigning Personnel to Planning and Execution Requirements.** Tailoring and modifying the DRMD is managed according to paragraph 4.6 of AFMAN 10-401, Vol 1, and AFI 38-205. Once this is complete, the unit must assign personnel to support the requirement. The Unit Type Code (UTC) identifies the specific requirements, identifying the AFSC, Special Experience Identifiers, Security Clearances, and grade needed by personnel selected to fulfill the tasking.

**5.3.1. Deployment Availability.** Before a person can be assigned to a planning requirement, whether pre-planning or execution, they must meet deployment eligibility requirements according to this AFI, AFI 10-201, AFI 36-2110, and the Supported Command processing guidance/reporting instructions. The Personnel Data System (PDS) has a series of business rules identifying to unit commanders questionable deployment eligibility called Deployment Availability (DAV) codes. Along with DAV codes some duty status codes place a person into a questionable deployment availability status. **Attachment 2** of this AFI explains all duty status and DAV codes affecting the deployment process.

5.3.1.1. The unit commander or designated representative ensures all personnel selected for deployment meet the current eligibility requirements outlined in the tasking.

5.3.1.2. Deployment Availability Waivers. The PRF and PDF advises commanders when personnel are ineligible for deployment according to the governing directives and ensures personnel with waiverable DAV and duty status codes are documented correctly. **NOTE: The ultimate responsibility for deployment eligibility rests with the unit commander. IDS automates the unit deployment selection process and this must be considered when waivers are needed**.

**5.3.1.2.1. (Added-AFSPC) The unit commander is the approval authority for all deployment availability waivers for conditions listed in Attachment 2. Waiver authority cannot be delegated below the unit commander. The UDM is responsible for identifying deployment ineligibility conditions to their unit commander for possible waivers. The Personnel Readiness Office and PDF serve as the wing's last set of eyes before personnel deploy. Waivers will be delivered to the Personnel Readiness Office or the PDF in written correspondence or by e-mail. If e-mail is used, the approval must originate from the unit commander's account or contain an audit trail from the commander's account indicating approval.**

5.3.1.3. Once the unit commander or designated representative completes unit personnel assignment and provides the selection list to the PRF or PDF for processing all unit commander level waiver codes are assumed reviewed and all necessary action completed making the selected personnel eligible for deployment.

5.3.1.4. If the unit is not the waiver authority, the unit commander or designated representative must coordinate with the waiver authority and provide coordination to the PRF or PDF before

member is considered eligible for deployment. Again, automation must be taken into consideration and waiver can be delivered in the form of written correspondence or email.

5.3.1.5. Units and PRF/PDF work with Personnel file that is a time snapshot of PDS so some DAV/duty status codes may no longer apply. In these instances, close coordination between the unit and PRF/PDF must occur data systems reflect the proper status.

**5.3.2. AFSC Substitution.** The UTC Mission Capability (MISCAP) statement outlines the capability of the tasked UTC and identifies authorized AFSC substitutions unit commanders may use. The UTC MISCAP, functional AFIs, USAF WMP-1 Functional Annexes, or the Supported Command processing guidance/reporting instructions regulate and control authorized substitutions. When substituting AFSCs the unit commander must coordinate the substitution with the deployed or deploying unit and the Supported Command ensuring the substitution continues to satisfy the original tasking requirement without mission degradation and the designated person can meet the functional requirements of the original tasked AFSC. The unit coordinates must all AFSC substitutions with the IDO, Manpower office, and PRF/PDF.

**5.3.3. Grade and Skill Level Substitution.** Like AFSC substitutions, the UTC itself, the UTC MISCAP, functional AFIs, USAF WMP-1 Functional Annexes, or the Supported Command processing guidance/reporting instructions regulate and control authorized grade and skill level substitutions.

5.3.3.1. When units identify people to fill deployment requirements, enlisted are tasked based upon their Control AFSC (CAFSC) and officers are tasked based upon their Duty AFSC (DAFSC).

5.3.3.2. When selecting personnel, the unit maximizes the matching of the required AFSC and grade to the person's AFSC and grade as much as possible. Grade and skill level substitutions will only occur when all available resources have been exhausted and are allowed by the tasking authority. The tasked unit commander can deviate, within the realm of the tasking authority's parameters, from the skill level for enlisted and the grade for officers, provided capability is not degraded.

5.3.3.2.1. Enlisted Skill Level Substitutions. Unless prohibited, personnel with two skill levels higher or one skill level lower may satisfy enlisted requirements. EXCEPTION: Chief Enlisted Manager (CEM) requirements must be filled by a CEM/E-9 resource. EXAMPLES: A person having a 3, 5, 7, or 9-skill level may satisfy 5-skill level tasking requirements. A person having a 5, 7, or 9-skill level may satisfy 7-skill level tasking requirements.

5.3.3.2.2. Enlisted Grade Substitutions. Unless prohibited, if the UTC or tasking identifies a required grade, the person must have that grade or higher grade to fill the requirement. EXAMPLE: A person with or in a higher grade than an E-7 may satisfy E-7 tasking requirement.

5.3.3.2.3. Officer Grade Substitutions. Unless prohibited by the Air Component through line remarks, officer grade requirements may be filled by a person having one grade higher or lower than the required grade.

5.3.3.2.3.1. Second and First Lieutenants are considered a single grade and can substitute in a captain grade requirement, provided they meet the intent of paragraph 5.3.3.2.

5.3.3.2.3.2. EXCEPTIONS: Unless prohibited by the Air Component through line remarks, a tasked medical commander may substitute two grades up and two grades down

for officers. Additionally, clinical personnel who are colonels may be tasked to fill non-colonel requirements. However, for all other Air Force specialties, a colonel grade requirement must be filled by a colonel.

5.3.3.2.3.3. EXAMPLES: A major, captain or lieutenant colonel may satisfy a major grade tasking. A lieutenant (1st or 2nd), captain, or major may satisfy a captain tasking.

**5.3.4. Deployment of Ineligible Personnel.** Personnel found to be unqualified or who do not meet the specifications identified in the tasking will be returned to home station at the expense of the assigned unit. Deployed unit commanders will identify ineligible personnel using the processing discrepancy procedures outlined in AFI 10-215. The home station must provide replacement of ineligible personnel, if required by deployed unit. **NOTE: If the person that is returned to home station for cause the unit is still responsible for filling the original tasking.**

**5.4. The Personnel Processing Process.** Commanders will ensure all personnel subject to deploy have their affairs in order and a Personnel Readiness Folder (PRF), containing required deployment documentation, on file and maintained by the UDM. The following paragraphs provide a base line or a starting point aiding the building of a successful personnel process.

**5.4. (AFSPC) Recommended composition of the Personnel Readiness Folder (PRF) is as follows: Notification of Selection for Deployment Attachment 16 (Added-AFSPC) and Deployment Acknowledgment Memorandum Attachment 17 (Added-AFSPC); Personal Affairs Fact Sheet Attachment 18 (Added-AFSPC); Basic Personal Clothing Requirements; Special Duty Appointment Memorandums (i.e. Classified Courier, Weapons Courier, etc.); AF Form 245, Employment Locator and Processing Checklist; copy of DD Form 93, Record of Emergency Data; PHS Form 731, International Certificate of Vaccination; AF Form 522, USAF Ground Weapons Training Data; and ID tags with two chains (one short, one long). Also recommend review of AFM 10-100, *Airmen's Manual*, to assist in the composition.**

**5.4.1. DRMD Processing.** The line-level detail plan requirements will flow electronically to the Personnel Readiness Flight (PRF) and the Manpower Office. The PRF and Manpower office immediately notifies the IDO when taskings are received. The baseline process is that the OPLAN requirements are loaded in both the Personnel and Manpower MANPER-B systems. Before exporting plan data to the IDO for input into the IDS system, the MANPER-B operator uses published declassification procedures and software to ensure only unclassified data is passed from the classified MANPER-B system

5.4.1.1. Every contingency, deployment, or exercise tasking built, created, and flowed contains the necessary information identifying the force composition requirement, location, and required delivery along other data relevant to the deployment process. The PRF, Manpower Office, IDO, and tasked units review the key and essential pieces of personnel deployment tasking and determine the proper course of actions (e.g., activating the Wing deployment process).

5.4.1.2. After all the requirements are received and reviewed, they will be made available to the tasked units via MANPER-B/LOGMOD interface disk. The PRF and/or Manpower Office will have all the requirements identified by unit and ready to give to the UDM for fill action. The unit is then responsible for assigning a name for each requirement on the DRMD NLT than the time listed on the DSOE. DSOE ATTACHMENT must list required events to be tracked.

5.4.1.3. If the unit is unable to support the tasking, the unit will shortfall the requirement in LOGMOD, the unit commander of the shortfall will complete AF Form 4006 and provide to the DCC. The DCC Personnel representative reviews base resources to see if individuals, to include Air Force civil service employees, with the required AFSCs are located elsewhere on the base. **NOTE: The personnel representative to the DCC is responsible for coordinating filler actions.** When unit resources cannot support the tasking, they acquire or source resources from other units and whenever possible, identify the fills from other on-station units from the same MAJCOM. If the base cannot support the tasking or the AFSC is not on base then a Shortfall message is sent according to AFI AFI 10-215. **NOTE: Personnel identified or coded in READY positions are not a legitimate reason to shortfall a deployment tasking**.

**5.4.2. Unit Personnel Assembly.** After personnel are identified for deployment, they will be assembled in a pre-identified area at the unit NLT the time indicated on the DSOE for unit processing.

5.4.2.1. During unit assembly all deploying personnel will be checked to ensure the following:

5.4.2.1.1. They meet personnel deployment requirements outlined in the tasking order.

5.4.2.1.2. They are eligible (DAV and duty status codes) to deploy.

5.4.2.1.3. They have all personal items in order.

5.4.2.2. Units will identify potential eligibility problems allowing the DCC and PDF maximum time to find qualified personnel from existing base resources.

**5.4.3. Deliver Personnel.** Document personnel movement requirements/ responsibilities in the local IDP. If required, the unit contacts Vehicle Operations to schedule/request transportation to get personnel to the processing area. Early contact will help ensure all individuals are delivered to the processing area in sufficient time to meet DSOE processing time.

**5.4.4. PDF Processing.** The key responsibilities of the PDF are: Advising commanders when personnel are ineligible for deployment; maintaining accountability of deploying personnel from arrival at PDF to base departure; preparing new DD Forms 93, Emergency Data Cards; and preparing ID tags (as requested).

5.4.4.1. From the time unit personnel are delivered to the PDF until they are physically turned over to the passenger processing function, the PDF is responsible for full control and accountability for each of them. A controlled area will be identified to hold all deploying personnel.

5.4.4.2. The final eligibility check of the PDF process is vitally important. A deployed commander does not want anyone not qualified or incapable of performing the deployed mission. The initial responsibility in the eligibility review process belongs to the unit commander. They know their people and should send only qualified, eligible personnel to process and deploy. However, sometimes in the heat of a deployment things fall through the cracks. The PDF serves as the Wing's last set of eyes ensuring all personnel meet the eligibility requirements to deploy and is responsible for informing the unit commander of any personnel in a questionable deployment eligibility status.

5.4.4.3. Contingency, Exercise, and Deployment (CED) TDY orders are the only type of TDY order used to deploy personnel. AFI 10-215, *Personnel Support for Contingency Operations* (PERSCO), directs all members deploying on contingencies, exercises, or deployments to receive CED orders. As stated earlier, the MANPER system is used to produce these orders. An individ-

ual from the Personnel Readiness function will be assigned to the orders section during deployment processing. AFI 10-215 provides specific guidance on producing CED orders.

5.4.4.4. CED TDY orders will be produced according to the timelines specified in the DSOE and in sufficient time to be included in the Troop Commander Package for each chalk. Ensure the tasked ULN and ULN position is included on the orders.

5.4.4.4.1. Unclassified orders will be used unless driven by specific plan, message, or directive. Changes, amendments or new orders, as required, are published and issued before, during and after the deployment. **NOTE: No CED TDY orders will be issued until the IDO or designated representative ensures the unit(s)/person(s) is/are deploying by mode and source IAW the OPLAN/CONPLAN TPFDD or equivalent CINC guidance**. Distribution of orders will be IAW AFI 10-215 and local procedures. CMOS or AMC systems will generate the passenger manifest based on the orders and files received from MANPER-B. LOGMOD Stand-Alone can also produce a passenger manifest as a back up to CMOS and AMC systems, if required. If the orders cannot be completed, a manual passenger manifest list is completed prior to the departure of the aircraft. Ample notification of any late orders will be given to the manifesting agency.

5.4.4.5. MANPER-B is essential to inform already deployed commanders, MAJCOMs, and the Air Staff of the deploying force composition. Perhaps the most important transaction created is the Data Pattern Traffic (DPT) 01 (Mini-record projection). This update establishes the foundation of systemized personnel strength accountability. This transaction is sent through DPT to AFPC, which in turns replicates the mini-record information to the corporate level agencies needing the information. HQ AFPC also sends the mini-record information to the Central Site and PERSCO teams.

5.4.4.6. A roll call will be conducted to see if all of the correct individuals are present. The passenger processing function will be handled by air transportation specialists after passenger processing is complete. Personnel may be released to the troop commander if for example, airlift is delayed.

**5.5. Develop a Minimum Personnel Requirements List.** Develop a minimum personnel requirements list within the unit for personnel on a deployment/mobility position. The supported commander determines any changes in theater clearance requirements and identifies all additional items deploying personnel must take. The supported commander, at execution, determines whether personnel need mobility bags, weapons, ammunition, and chemical injectors. Mobility bag and small arms management for active duty units will be IAW AFMAN 23-110. ANG and AFRC units will follow the guidance of their higher headquarters.

**5.6. Troop Commander.** After processing of personnel is complete, the troop commander will be provided with a Troop Commander's Personnel Accountability Kit (PAK). This kit includes MANPER-B mini-records, orders w/SSANS, AF Forms 245 and other valuable information regarding deploying personnel.

**5.6.1. The Troop Commander.** Will be provided the following information and will be briefed on the requirement to provide the following information to either the ADVON, reception team, or the Logistics Readiness Center at the deployed location.

5.6.1.1. The PRU and DCC will generate the following information to accompany the deploying units to assist in the redeployment process.

5.6.1.1.1. Incoming Aircraft Commanders package

5.6.1.1.2. Troop Commander's Personnel Accountability Kit (PAK)

5.6.1.1.3. IDS personnel and levy data disk

5.6.1.1.4. Orders with SSANs

5.6.1.1.5. IDS LOGPLAN and execution file data disk

5.6.1.1.6. CALM data file

5.6.1.1.7. Passenger manifests

5.6.1.1.8. Shippers Declarations

5.6.1.1.9. Cargo Load and Packing lists

5.6.1.1.10. AF Form 245

5.6.1.1.11. Cargo Joint Inspection (DD Form 2133)

5.6.1.1.12. Aircraft Load Plans

5.6.1.2. This information will be turned over upon arrival at the deployed location to the reception team, Logistics Readiness Center, or the PERSCO team to track personnel accountability and to support redeployment planning.

# Chapter 6

## RECEPTION PROCESS

**6.1. The Reception Process.** The Reception Process is designed to integrate incoming units into a mission/combat capable force as soon as possible. It involves off-loading, documenting, accounting and bedding down inbound equipment and personnel. Reference the reception chapter in AFI 10-404, *Base Support Planning*, and MAJCOM guidance for specific planning processes, timing, decision support tools, beddown reception process and team composition. Additionally see Joint Publication 4.01-8, *Joint Tactics, Techniques, and Procedures for Reception, Staging, Onward Movement, and Integration*. For the purposes of this guidance, the reception process, if accomplished correctly, enables the redeployment process. The redeployment process supports both forward deployment forces and the return of forces to home station in an effective and professional manner. The key to successful reception and redeployment is the immediate documentation and accountability of equipment and personnel at deployed or transient locations.

**6.1.1. Reception Team Responsibilities.** As a minimum the reception teams will ensure:

6.1.1.1. Equipment received is placed in a secure holding area until the owning units arrive for pickup.

6.1.1.2. Arriving personnel are accounted for and briefed regarding their mission, work area, local conditions, and command structure.

**6.1.2. Reception Teams.** In-place teams, to include home station personnel or advanced echelon (ADVON) teams, can accomplish the reception of resources. Reception teams will capture all data and documentation necessary to account for arriving resources using the Integrated Deployment System. Cargo received will be placed in the appropriate holding area pending distribution to the owners. All personnel arriving at the deployed location will centrally process through the reception control center, ensuring that full accountability will be accomplished using the PERSCO system.

6.1.2.1. The primary tool suite that supports and enables the reception process is the Integrated Deployment System (IDS). IDS components may or may not fully duplicate the tool suite used at home station. Minimum tools required are LOGMOD Stand Alone, PERSCO Module of MANPER-B, CALM and CMOS. AMC aerial port systems may be used if CMOS is not available. The full suite of tools (LOGMOD, CALM, CMOS and MANPER) will be the primary system utilized, if available.

**6.2. Employment and Reception Planning.** The key to Reception planning starts with the Supported Command. The Supported Command must develop a program to accomplish Base Support Plans for those installations in its area of responsibility that are intended to be beddown location without a major Air Force presence. As a minimum, the Supported Command creates a BSP Part 1 for any installations or locations falling into this category. The Supported and Supporting MAJCOMs OPR for Base Support Planning establishes criteria defining the degree to which bases will develop their base support plans.

6.2.1. Units with little to no reception responsibilities may be tasked to complete only Part 1 of the Base Support Plan according to AFI 10-404, identifying only airfield infrastructure and capabilities.

6.2.2. Units with significant support responsibility such as reception, training, aerial port or strategic mission may be tasked to complete a very detailed Part 1 and 2. This also applies to Air Force organizations that are tenants on installations where other Services are the host.

6.2.3. Two new systems will help to automate and improve base support planning: Survey Tool for Employment Planning (STEP) and the Beddown Capabilities Assessment Tool (BCAT). STEP automates the process of documenting a beddown locations' physical infrastructure in a multimedia database, while the BCAT decision support tool adds the flow of specific forces, materiel, munitions, fuel, and mission requirements to the infrastructure database to accomplish mission capability analysis.

**6.3. ADVON Team Responsibilities.** The primary responsibilities of the ADVON Team are preparation, execution of unit employment, and developing employment reception. The key to any employment success is the proper identification of employment location capabilities and their LIMFACs. The Base Support Plan is the primary document to use in planning and employing units. An ADVON should include representatives from Operations, Logistics Plans, Personnel (PERSCO), Communications, Contracting, Finance, Civil Engineering, Security Forces, and Judge Advocate depending on the mission and the beddown location. An ADVON team is not required for every deployed unit or location. When used, the ADVON team or host unit will assist all other units in the beddown process.

**6.3.1. Reception Planning and Execution.** The ADVON team or host IDO is the principal agency for planning and executing the reception process ensuring for proper documentation and disposition of resources. The ADVON team also develops plan for the Reception Control Center (RCC) ensuring main force is processed in an efficient and effective manner. The primary responsibility of the ADVON Team is employment reception. The Base Support Plan is the primary document to use in planning and employing units. An ADVON should include representatives from Operations, Logistics Plans, Communications, Contracting, Finance, Civil Engineer, and Security Forces, Personnel (PERSCO), and Judge Advocate depending on the mission and the beddown location. An ADVON team is not required for every deployed unit or location. When used, the ADVON team or host unit will assist all other units in the beddown process.

**6.4. Documentation and Data Capture for Incoming Resources:**

**6.4.1. Data Collection.** The ADVON or Reception Team for all incoming resources will collect the following documentation and data:

6.4.1.1. Incoming Aircraft Commanders package.

6.4.1.2. Troop Commander's Personnel Accountability Kit (PAK).

6.4.1.3. IDS personnel and levy data disk.

6.4.1.4. Orders with SSANs.

6.4.1.5. IDS LOGPLAN and DSOE execution files (disk).

6.4.1.6. CALM data file.

6.4.1.7. Passenger manifests.

6.4.1.8. Shippers Declarations.

6.4.1.9. Cargo Load and Packing lists.

6.4.1.10. AF Form 245.

6.4.1.11. Cargo Joint Inspection (DD Form 2133).

6.4.1.12. Aircraft Load Plans.

**6.4.2. PERSCO Documentation.** PERSCO personnel and their established procedures will be used for documenting arriving personnel. However, if a PERSCO team is not available, a person will be appointed by the troop commander to maintain accountability until PERSCO team arrives (see AFI 10-215, Unit Commander Responsibilities).

**6.5. The Reception Control Center (RCC).** Establish an RCC. The RCC will provide overall direction and coordination of reception and beddown procedures and resolve any problems affecting reception of resources. It will ensure all personnel are put in contact with their unit of assignment or duty sections. It will also monitor the inbound force airlift estimated and the actual arrival times of personnel and cargo. See paragraph 1.9.1 of this AFI for detailed list of RCC responsibilities. When TALCE or MSE is operating at the employment site, the RCC representative contacts the appropriate agent to ensure all incoming resources are accounted for and customs cleared before moving them to the reception area (see also AFI 10-404).

**6.5.1. The Cargo Reception Function (CRF).** Manages the transportation needs of arriving personnel and delivers baggage to and from designated locations.

6.5.1.1. Provides for movement of cargo from holding areas based on prioritization given by the unit representative or troop commander.

6.5.1.2. Collect all documentation and date (e.g., placards, load/packing lists, LOGMOD files, etc.) for all incoming cargo. Notify the PERSCO Team of inbound surface deliveries, passenger movement status, and cargo hold and movement status.

6.5.1.3. Provide shuttle bus map/routes and arrival and departure times.

6.5.1.4. A holding area will be established for collecting pallets and nets to be put back into the transportation system. **NOTE: For employment sites with TALCE or MSE support, the CRF process is provided by the provisional wing/group**.

**6.5.2. The PERSCO Team.** Will account for all arriving and departing personnel. See paragraph 1.10 of this AFI for a detailed list of PERSCO responsibilities.

**6.6. Deployed Commanders.** Ensure arriving/deployed personnel meet tasking requirements to include line remarks. See paragraph 1.11 of this AFI for a detailed listing of responsibilities.

**6.7. The Logistics Command and Control (Log C2) Team.** At the deployed location, directs overall logistics command and control of reception, beddown, onward movement, and redeployments, including making inputs to planning documents and TPFDDs. Directs the logistics readiness center (LRC) operations and combat support integration. Manages war reserve material (WRM) and coordinates interservice, international, and wartime host nation support. Normally, establishes a Log C2 Cell collocated with the deployed Operations Center to manage and control logistics operations. The Log C2 Team/Cell chief is responsible for keeping the commander and essential staff informed. Additionally, the chief is the focal point for redeployment actions.

6.7.1. UTCs comprising the Log C2 Team are XFHB1, XFHB2, XFHBF, and XFHBG. **(NOTE: XFHB1, B2, and BF are personnel only UTCs. XFHBG represents the personnel only UTC's equipment package designed to be deployed as one equipment package for every two Logistics Command and Control personnel deployed to the location.)** Example: if three XFHB2 and two XFHBF UTCs were tasked, then four XFHBG UTCs would also be tasked to ensure enough automated support will be available for the eight personnel deployed.

# Chapter 7

## REDEPLOYMENT

**7.1. Redeployment.** Redeployment applies to onward or forward deployment as well as return to home station. Redeployment planning is essential to an effective and efficient return of deployed resources or forward deployment of combat capability. Redeployment activities need to begin long before a redeployment order is received. Normally, the planning process begins upon arrival at the deployed location. This ensures all deployed resources are accounted for and redeployment movement activities comply with host nation customs requirements. Redeployment IS NOT "deployment in reverse." First, fragmented UTCs or ULNs are more likely to be incrementally redeployed/forward deployed to retain residual capability at original deployed location requiring the supportability of the remaining forces. Planners (Logistics, Personnel, Supply, Transportation, and so on) need to plan for movement of parts of units, UTCs, or ULNs. Secondly, it is most common to receive redeployment orders calling for the redeployment of fragmented UTCs or ULNs rather than a "reverse TPFDD." Additionally, redeploying may, for military, political, or diplomatic reasons, be far more rapid than the deployment phase, which makes redeployment planning all the more critical.

**7.2. The Redeployment Process.** The following outlines basic steps in the redeployment process. These steps mirror, for the most part, the deployment process. However, as indicated above, the process must be flexible and able to adapt to the unique requirements of the redeployment environment. Additionally, be aware that unit moves are normally classified and redeployment information should be controlled and provided on a strictly need-to-know basis. Remember, redeployment includes forward deployment, as well as return to home station.

**7.2.1. Redeployment Planning.** Redeployment planning normally starts before the deployment, when the Joint Task Force (JTF) staff first gathers to plan the operation. Redeployment activities begin long before a redeployment order is received. Logistics Planners assist deploying commanders to ensure personnel with the necessary redeployment skills and training are deployed in order to reduce the amount of training required in the combat environment. In order for logisticians to train Redeployment Assistance Team (RAT) members in every task, the commander should ensure a core capability is deployed. Logistics Planners need to begin planning upon arrival at the deployed location. This requires coordination with all deployed functional areas, as well as the host nation's customs representative. As the logistics planner may not be on the initial or early loads, consider appointing an individual from another logistics area to be responsible for document collection. At deployed sites with multiple units, the lead unit is responsible for redeploying all the units at the site.

**7.2.2. Deployed Command Organization.** The command organization at a deployed location varies depending upon theater and the designated lead single service command or JTF. The redeployment order originates at JCS or the joint command headquarters, then is forwarded to the deployed commander. The deployed commander usually tasks a J4/A4 as lead agent for execution of redeployment activities; however, determination of units and timing is primarily a commander and J3/A3 decision. **NOTE: The deployed commander, before taking any actions, must authenticate any redeployment order. A false redeployment order could cause serious mission degradation.**

**7.2.3. Identify Redeployment Team Members.** Deployed installation commander identifies preliminary redeployment team members. Anticipate the formal redeployment tasking as early as possible. Normally, a RAT is formed under the overall management of the Log C2 Team.

**7.2.4. Building the Redeployment Schedule of Events (same as DSOE).** The Log C2 Scheduler, a member of the Log C2 Team/Cell, builds, coordinates with redeploying units, and publishes the DSOE based on the redeployment tasking and scheduled transportation. Distributes final DSOE to all Unit Redeployment Workcenters. Also, accomplishes preliminary load plans based on the redeployment airflow message, if applicable.

**7.2.5. Recall and Preparation of Equipment and Personnel.** Recall various kinds of equipment**:** WRM, mobility equipment, and host nation and contracted equipment. Units prepare equipment for shipment (prioritize, identify with unit, destination, and cargo movement markings, identify and document hazardous material and build-up pallets). Process cargo (in-check, weigh, measure, joint inspect, marshal, prepare cargo manifest, load cargo, process and load baggage, and conduct customs inspections).

7.2.5.1. Recall and assemble personnel, as required, to ensure they are ready to redeploy, whether it be forward or back to home station.

7.2.5.2. Coordinate home base nation's customs and agriculture inspections. Personnel and equipment will be processed back into unit and supply records updated. The redeploying unit is responsible to ensure all equipment documentation is correct and their equipment is properly cleaned to meet customs requirements.

**7.2.6. Personnel and Equipment Loading.** Load unit equipment, baggage, and personnel. Redeploying units may be tasked to provide augmentees to support loading operations. For specific guidance on how to load aircraft, consult AFJI 24-108 and the applicable aircraft –9 Technical Order (TO).

**7.2.7. Redeployment Meals.** The Log C2 Cell will ensure arrangements are made to secure and provide in-flight meals, water/juice to redeploying forces. Rations may be the only option available for in-flight feeding.

**7.3. Redeployment Documentation, Data, and Automated Systems.** Proper documentation, data, and supporting automated systems are vital in carrying out a successful redeployment.

**7.3.1. Redeployment Documentation.** Collect as many deployment documents as possible—these are invaluable as references for the team to create the return documentation. For example, use packing/load lists/manifests or CA/CRLs to track assets and units when forward deployed and their redeployment status; e.g., destroyed, captured, excessive restoration costs, and reorder information. At the deployed location, the reception area is a good source for many of these documents and to account for equipment, collect cargo manifests, load plans, hazardous cargo documentation, etc. Knowing where assets are located, whether they are redeployable, and where the deployment documentation is, should reduce labor-intensive efforts when the redeployment order is received. Know what equipment remains or needs to be returned to other units. Further, documentation gives build-up teams an advantage when repackaging. Also, this should aid in estimating actual weights when creating the redeployment load plans and manifests.

**7.3.2. Redeployment Electronic Data.** Deployed Logistics Plans personnel are responsible for the collection of resource information necessary to accomplish redeployment of all personnel and cargo at the deployed location.

7.3.2.1. Data files to collect include LOGPLAN, CMOS export file, deployed personnel file, and tasked plan file. Some of these files may be resident in systems at the deployed location (like MANPER-B). Therefore, assuring the files are available in a system, so they may be used to sup-

port redeployment, is sufficient and precludes Logistics Planners from having to physically collect these files.

7.3.2.2. Not all of these files may be available, but every effort must be made to capture this data for use in redeployment. This data may be collected from the RCC, if established.

7.3.2.3. Deployed logisticians begin to prepare calculations, to include preplanned load plans, for required redeployment airlift based on collected or captured data. Build the redeployment plan and DSOE based on a priority flow.

**7.3.3. Redeployment Support Systems.** The primary automated suite supporting and enabling the redeployment process is the Integrated Deployment System (IDS). The component tools may or may not fully duplicate the software suite used at home station. Minimum required tools are: LOGMOD Stand Alone, PERSCO Module of MANPER-B, CALM, and CMOS. AMC aerial port systems may be used, but only when CMOS is unavailable. Use of these automated systems is critical to ensuring ITV and personnel accountability.

**7.3.4. Documenting the Redeployment.** The Log C2 Cell is responsible for collecting and documenting redeployment activity data. This is essentially handled by deployed components of IDS and the PERSCO team MANPER-B system. This data is of historical significance and is used in trend analysis and process improvement.

7.3.4.1. Maintain Logistics Plans files, DSOE files, PERSCO files, cargo and passenger manifest files. Documentation of lessons learned will be accomplished using the Joint Universal Lesson Learned program, as well as requirements contained in AFMAN 37-123 and AEF after action reporting requirements in AFI 10-400. MAJCOMs may also levy after action reporting requirements, as they see fit.

## 7.4. Redeployment Functions, Workcenters, Responsibilities:

**7.4.1. Log C2 Team and Cell.** Logistics Planners, acting on behalf of deployed commanders, receive tasking/redeployment orders verbally, or through levy flow, message, or other official notification. Logistics Planner are responsible overall for planning, coordinating, managing, and executing redeployment/base closure activities. These duties align with the Logistics Planner's responsibilities in operating the Logistics C2 Team/Cell as described in paragraph 6.7. At a minimum, Logistics Planners, in concert with Personnel, Supply, Transportation, Security Forces, Services, and other deployed functional representatives (normally called a RAT), will plan for and execute movement of deployed resources. At deployed sites with multiple units, the lead unit is responsible for redeploying all the units at the site.

**7.4.2. RAT.** Members provide functional coordination for accomplishing actions at the deployed site to include planning the redeployment and coordinating with the deployed installation commander to identify the correct priorities for getting the units' personnel, equipment, and supplies back to home station or to a forward location. Suggested RAT composition includes representatives from the following functional areas: aircraft maintenance, transportation (including aerial port, if resident on the base and vehicle operations), supply, services, personnel (PERSCO), contracting, and civil engineering. Additional members, to include tenants or sister service representatives, may be required as the commander or Log C2 Team or Cell chief deems necessary.

**7.4.3. Unit Redeployment Workcenters.** The Log C2 Cell tasks units, as applicable, to stand up their Unit Redeployment Workcenters. Units must identify and prepare their resources for redeploy-

ment. Additionally, they ensure shortfalls/LIMFACs relating to personnel, facilities, vehicles, MHE, and any other equipment necessary for the redeployment are identified. Elevate shortfalls/LIMFACs as quickly as possibly to ensure timely resolution.

7.4.3.1. Unit Redeployment Workcenter Responsibilities: Deployed unit commanders must ensure units prepare and handle equipment and cargo in accordance with DoD 4500.32-R, *Military Standard Movement Procedures (MILSTAMP)*; DoD 4500.9-R *Defense Transportation Regulation (DTR), Part II* and *Part III*; AFI 24-201, *Transportation Management of Air Force Cargo*, AFJMAN 24-204, *Preparing Hazardous Materials for Military Air Shipments*, and Title 49, Code of Federal Regulations. Unit commanders will ensure redeployment operations are conducted in a professional military manner, with a sense of urgency and keen situational awareness. Remember, carrying out the mission as safely as possible is paramount, and ORM concepts should be used to the maximum extent possible to mitigate risk.

7.4.3.1.1. Units prepare documentation for each increment of cargo IAW cargo preparation guidance in this AFI. Units must include, as a minimum, the same documentation required for deployment as referenced in this AFI. Ensure all customs documentation is complete.

7.4.3.1.2. Identify and Prepare Cargo. Unit identification, destination, and cargo movement markings must be clearly visible to assist transporters to efficiently retrograde equipment. Proper identification and markings are especially important when moving by sea or when aircraft have integrated loads for multiple destinations. To aid in identifying unit cargo, use distinctive, waterproof markings, or placards made of squares of canvas that will be visible from a distance.

7.4.3.1.3. Redeploying units must handle and ship classified material in accordance with DoD 5200.1-R, *Information Security Program Regulation*, and AFI 31-401, *Information Security Program Management*. AFI 31-401 also gives specific guidance on how to account for deployed classified material.

7.4.3.1.4. Redeploying units must provide qualified drivers for specialized vehicles (e.g. reserve all-terrain transports [RATTs], ATVs, etc.).

7.4.3.1.5. Any required shoring/dunnage will be provided by the redeploying unit and must remain with its associated equipment. **NOTE: Units redeploying from certain locations may be required to leave wooden dunnage due to infestations**.

7.4.3.1.6. Deployed equipment custodians are required to account for their unit equipment through the designated supply function in accordance with AFMAN 23-110, *USAF Standard Base Supply System*.

7.4.3.1.7. Ensure WRM, borrowed, host nation, or leased equipment is returned to owning organization before unit departure.

7.4.3.1.8. Units will be prepared to provide manpower resources to aid and assist in the redeployment process when requested by the Log C2 Cell.

7.4.3.1.9. Units redeploying by convoy must follow cargo preparation requirements in AFI 24-201, Cargo Movement, and AFJI 24-216, Permits for Oversize, Overweight, or Other Special Military Movement on Public Highways in the United States.

7.4.3.1.10. Deployed commanders must ensure hazardous waste is properly handled and prepared for retrograde or disposal IAW current guidance and host nation requirements.

**7.4.4. Cargo Redeployment Function (CRF).** As with the CDF, the local transportation function establishes the capability to receive, marshal, JI, and load equipment for redeployment. Responsibilities established in paragraph 2.9 also apply to redeployment operations.

7.4.4.1. CRF Responsibilities: The transportation function, upon direction of the Log C2 Cell, activates this workcenter to receive and process equipment for the redeployment.

7.4.4.1.1. Conducts the following actions safely. Ensures each load crewmember has required safety gear (i.e., gloves, steel-toed shoes, hearing protection, and reflective belts).

7.4.4.1.2. Provides secure location to hold baggage after inspection by customs officials. If bulk shipping, turns mobility bags in to a centralized location as soon as possible. Makes every effort to bulk ship mobility bags and weapons.

7.4.4.1.3. CRF will ensure that customs inspections are performed for all deploying resources.

7.4.4.1.4. Ensure maximum dissemination of customs information and compliance requirements.

7.4.4.1.5. Ensure that all hazardous material being moved complies with Air Force Joint Manual 24-204, *Preparing Hazardous Materials for Military Air Shipment*.

7.4.4.1.6. Move weapons and ammunition in accordance with AFI 31-209, *Resource Protection*, and DoD-M, *Sensitive Conventional Arms, Ammunition, and Explosives*.

7.4.4.1.7. Plans to manage hazardous wastes that have been generated while at the deployed location will be developed IAW AFI 32-7006.

7.4.4.1.8. Ensure that a personal amnesty room or box is available for all personnel to pass through before customs inspection. Brief all personnel on contraband regulations before they pass through the amnesty room or by the amnesty box.

7.4.4.1.9. Ensure passenger manifests are prepared for each deploying chalk. IDS use will provide the automation needed to support this requirement.

7.4.4.1.10. Coordinate joint cargo inspection for all redeploying cargo and document IAW applicable instructions or guidance. Use the DD Form 2133 as a guide.

7.4.4.1.11. Verify all cargo weights and dimensional data checks reporting data to CALM for final load planning.

7.4.4.1.12. Materiel Handling Equipment (MHE, i.e., 463L forklifts and K-loaders). Due to limited MHE, locate the pallet build-up area and the aircraft silhouette as near to aircraft load sites as possible to help reduce MHE requirements.

7.4.4.1.13. Final load plans will be accomplished after the load has passed inspection for proper labels, weights, identified and documented hazardous equipment, security, configuration, and agricultural check.

7.4.4.1.14. Log C2/TALCE or designated cargo function must use CMOS or AMC systems to maintain cargo In-Transit Visibility. CMOS/AMC system will pass the movement data to the Global Transportation Network (GTN).

7.4.4.2. When present, a Tanker Airlift Control Element (TALCE), Mission Support Element (MSE), or their equivalent, validates redeployment load plans and passenger/cargo manifests, supervises and controls cargo load teams, provides ramp coordinators, performs JI, and provides/operates MHE beyond the capability of the redeploying unit. When present, a TALCE or MSE works closely with the Log C2 Cell and RAT to ensure closure times are met.

**7.4.5. Personnel Support for Contingency Operations (PERSCO):**

7.4.5.1. The deployed PERSCO team must complete all redeployment actions required in the MANPER system and AFI 10-215. The PERSCO team ensures the Log C2 Team and the deployed commander plans all redeployment actions necessary for movement. Items considered during the planning are:

7.4.5.1.1. Status of Forces Agreements (SOFAs) and customs of the host country.

7.4.5.1.2. Type of personnel structure needed to retain residual capability of the deployed site.

7.4.5.1.3. Ensuring projected mode of transportation and itinerary are reported in available deployed IDS components or message traffic to facilitate ITV. At a minimum, redeployment departure date (projected and/or actual) and mission or flight number must be updated in MANPER-B.

7.4.5.1.4. Based on the modes of transportation (airlift/sealift/ground) and TPFDD, redeployment planners will determine redeployment sequence of all resources. The modes of transportation (airlift/sealift/ground) need to be identified—it is essential to prioritize cargo for the various modes of transportation.

7.4.5.1.5. Passenger Prioritization. The redeploying unit commander will select couriers familiar with the cargo for each load to include classified items as necessary. These couriers will be first on the aircraft, the rest of the seats will be filled according to the operational demands.

7.4.5.1.6. Out-processing Actions. Ensure the out-processing plan includes checkout with Billeting, Security Forces, Billeting, Services, deployed First Sergeant, and others as needed. Ensure redeployment documents clearly reflect all personnel redeploying. It is important to stress the deployed unit commander or their designated representatives are the only personnel that can authorize personnel departures for a unit.

7.4.5.1.7. Loading of Passengers. Like the home station Personnel Deployment Function (PDF), PERSCO plays an essential role in the development of processes for in-passenger check-in, identification of “sterile” waiting area, and the eventual loading of the aircraft. Ensure procedures are in-place alerting you of personnel not departing on scheduled aircraft. This affects both future passenger flow and end-strength of your location. PERSCO is responsible for manning the Personnel cells of any processing line developed for moving of personnel from the deployed unit.

7.4.5.1.8. PERSCO confirms the redeployment data and actual departure date to update the MANPER-B system.

**7.5. Base Closures.** Log C2 personnel and deployed Contracting Officers must ensure that all negotiated agreements are considered and complied with and terminated if appropriate.

7.5.1. Air Component Command Coordination of Base Closure Actions. This coordination is key to determine agreements made with the host nation concerning base usage and vacating procedures and responsibilities.

7.5.1.1. Close base as appropriate.

**7.6. Reconstitution.** A key consideration during surge operations and especially during redeployment is reconstitution. This process entails planning that will return units back to their full combat capability in a short period of time. While there is no one correct rule set for reconstitution planning, consideration must be given to prioritizing and restoring levels of consumables expended during the crisis, recovering lost training and addressing personnel recovery (leave, attrition and retention). Every base/unit will have to assess their own situation based on such variables as the magnitude, duration and intensity of the crisis; consumption rates and the type of deployment location (fixed vs bare base). Further guidance on reconstitution is contained in AFI 10-400, *Aerospace Expeditionary Force Planning*.

**7.7. Forms Prescribed.** The below prescribed forms may be obtained through normal distribution channels or automatically filled in and printed through LOGMOD.

7.7.1. AF Form 2511, **Deployment Schedule of Events**

7.7.2. AF Form 2512, **Deployment Schedule of Events - Loading Schedule**

7.7.3. AF Form 4005, **Individual Deployment Requirements**

7.7.4. AF Form 4006, **Deployment Shortfall/LIMFAC**

MICHAEL E. ZETTLER, Lieutenant General, USAF
DCS/Installation & Logistics

## Attachment 1

## GLOSSARY OF REFERENCES AND SUPPORTING INFORMATION

***References***

DoDI 3020.37, *Continuation of Essential DoD Contractor Services During Crises,* 6 Nov 90

DoD 4500.9-R, *Defense Transportation Regulation (DTR), Part II, Cargo Movement*, Oct 99

DoD 4500.9-R, *Defense Transportation Regulation (DTR), Part III, Mobility,* Apr 97

DoD 4500.32-R, *Military Standard Movement Procedures (MILSTAMP)*

DoD 5100.76-M, Physical Security of Sensitive Conventional Arms, Ammunition, and Explosives, Sep 92

DoD 5200.1-R, *Information Security Program*, Jan 97

JP 0-2, *Unified Action Armed Forces (UNAAF)*

JP 1, *Joint Warfare of the Armed Forces of the United States*

JP 1-0, *Joint Doctrine for Personnel Support to Joint Operations*

JP 1-02, *DOD Dictionary of Military and Associated Terms*

JP 4-01.8, *Joint Tactics, Techniques, and Procedures for Reception Staging, Onward Movement, and Integration*

JP 6-0, *Doctrine for Command, Control, Communications, and Computer (C4) Systems Support to Joint Operations*

CJCSM 3122.01, *Joint Operation Planning and Execution System Vol I (Planninng Policies and Procedures)*

CJCSM 3122.02, *Manual for Time-Phased Force and Deployment Data (TPFDD) Development and Deployment Execution*

CJCSM 3122.03, *Joint Operation Planning and Execution System Vol II (Planning Formats and Guidance)*

CJCSM 3122.04, *Joint Operation Planning and Execution System Vol II (Supplemental Planninng and Execution Formats and Guidance)*

USAF WMP 1-5, *USAF War and Mobilization Plan, Volumes 1-5*

AFDD 1-2, *Air Force Glossary*

AFI 10-201, *Status of Resources and Training Systems (SORTS)*

AFI 10-209, *RED HORSE Program*

AFI 10-210, *Prime Base Engineer Emergency Force (BEEF) Program*

AFI 10-215, *Personnel Support for Contingency Operations*

AFI 10-217, *Resource Augmentation Duty (READY) Program*

AFPD 10-4, *Operations Planning*

AFI 10-400, *Aerospace Expeditionary Force Planning*

AFMAN 10-401, Vol 1, *Operation Plan & Concept Plan Development and Implementation*

AFI 10-404, *Base Support Planning*

AFCAT 21-209, *Ground Munitions*

AFMAN 23-110, *USAF Supply Manual*

AFI 24-201, *Cargo Movement*

AFI 24-216, *Permits for Oversize, Overweight, or Other Special Military Movements on Public Highways in the United States*

AFJMAN 24-204, *Preparing Hazardous Materials for Military Air Shipments*

AFI 24-301, *Vehicle Operations*

AFI 24-302, *Vehicle Maintenance Management*

AFJMAN 24-306, *Manual for the Wheeled Vehicle Driver*

AFMAN 24-307, *Procedures for Vehicle Maintenance Management*

AFI 31-207, *Arming and Use of Force by Air Force Personnel*

AFI 31-210, *The Air Force Antiterrorism/Force Protection (AT/FP) Program*

AFI 31-401, *Information Security Program Management*

AFI 32-4001, *Disaster Preparedness Planning and Operations*

AFI 35-101, *Public Affairs Policies and Procedures*

AFI 36-507, *Mobilization of the Civilian Workforce*

AFI 36-2110, *Assignments*

AFI 36-2226, *Combat Arms Program*

AFI 36-2238, *Self Aid and Buddy Care Training*

AFI 36-3103, *Identification Tags*

AFI 38-205, *Manpower and Quality Readiness and Contingency Management*

AFJI 48-110, *Immunization and Chemoprophylaxis*

AFI 51-401, *Training and Reporting to Ensure Compliance with the Law of Armed Conflict*

AFI 90-901, *Operational Risk Management*

AFMAN 91-201, *Explosive Safety Standards*

AFPAM 91-215, *Operational Risk Management (ORM) Guidelines and Tools*

AFPAM 91-216, *USAF Safety Deployment and Contingency Pamphlet*

AFCSM 10-626, *Deliberate Crisis Action Planning and Execution System (DCAPES) Base-Level Manpower/Personnel (MANPER) Module*

AFCSM 16-346V2, *Computer Aided Load Manifesting (CALM) A200B/AU, Software User Manual*

AFCSM 25-710V3, *LOGMOD (TG) SIP Users Manual*

AFM 171-737V2, *Cargo Movement Operations System: (CMOS): D132/CM, Users Manual*

AFM 171-737V2A, *Cargo Movement Operations System*

***Abbreviations and Acronyms***

**AEF—**Aerospace Expeditionary Force

**AEFC—**Aerospace Expeditionary Force Center

**AETF—**Aerospace Expeditionary Task Force

**AFI—**Air Force Instruction

**AFMAN—**Air Force Manual

**AFPC—**Air Force Personnel Center

**AFR—**Air Force Regulation

**AFRC—**Air Force Reserve Command

**AFSC—**Air Force Specialty Code

**AFWUS—**Air Force-Wide UTC Availability and Tasking Summary

**AME—**Alternate Mission Equipment

**ANG—**Air National Guard

**ANGRC—**Air National Guard Readiness Center

**APT—**Air Passenger Terminal

**CALM—**Computer Aided Load Manifesting

**CDF—**Cargo Deployment Function

**CMOS—**Cargo Movement Operations System

**COMPES—**Contingency Operation/Mobility Planning and Execution System

**CRF—**Cargo Redeployment Function

**DCAPES—**Deliberate and Crisis Action Planning and Execution System

**DCC—**Deployment Control Center

**DDF—**Deployment Data File

**DAV—**Deployment Availability

**DOC—**Designed Operational Capability

**DoD—**Department of Defense

**PDF—**Personnel Deployment Function

**DSOE—**Deployment Schedule of Events

**EOR—**Explosive Ordnance Recognition

**FORSIZE—**USAF Force Sizing Exercise

**GSU—**Geographically Separated Unit

**GTN—**Global Transportation Network

**HAF—**Headquarters Air Force

**IDO—**Installation Deployment Officer

**IDS—**Integrated Deployment System

**JOPES—**Joint Operation Planning and Execution System

**LIMFAC—**Limiting Factor

**LOAC—**Law of Armed Conflict

**LOGFOR—**Logistics Force Packaging Subsystem

**LOGMOD—**Logistics Module

**LOGPLAN—**Logistics Planning Module

**LSA—**LOGMOD Stand-Alone

**MAJCOM—**Major Command

**MANFOR—**Manpower Force Module

**MANPER-B—**Manpower and Personnel Module Base Level

**MEFPAK—**Manpower and Equipment Force Packaging

**MILSTAMP—**Military Standard Transportation and Movement Procedures

**MISCAP—**Mission Capability Statement

**MSS—**Mission Support Squadron

**MTW—**Major Theater of War

**NBCDT—**Nuclear-Biological Chemical Defense Training

**OI—**Operating Instructions

**OPLAN—**Operation Plan

**OPR—**Office of Primary Responsibility

**ORM—**Operational Risk Management

**OT & P—**Operational Taskings and Priorities

**PRF—**Personnel Readiness Function

**READY—**Resource Augmentation Duty

**SME—**Squadron Medical Element

**SURF—**Standard UTC Reference File

**TCN—**Transportation Control Number

**TPFDD—**Time-Phased Force Deployment Data

**UDM—**Unit Deployment Manager

**ULN—**Unit Line Number

**UTC—**Unit Type Code

**WMP—**War and Mobilization Plan

**WRM—**War Reserve Materiel

***Terms***

**Aerial Port Squadron (APS)—**An Air Force organization that operates and provides the functions assigned to aerial ports, including processing personnel and cargo; loading equipment; preparing air cargo and load plans; loading and securing aircraft, and supervising units engaged in aircraft loading and unloading operations. (JP 1-02)

**Aerospace Expeditionary Forces (AEFs)—**Wings, groups, and squadrons assigned and attached to an Aerospace Expeditionary Task Forcd (AETF) or attached to an in-place numbered air force (NAF) by Department of the Air Force (DAF) orders.

**Aerospace Expeditionary Task Force (AETF)—**A deployed numbered air force (NAF) headquarters or command echelon subordinate to a NAF headquarters and assigned and attached operating forces (command element plus operating forces).

**AFPC PALACE Programs—**

**PALACE BLITZ—**The project name the MPF, PERSCO Team and supporting and supported component commands use to reclama personnel levies and request filler and replacement personnel during contingency, wartime and emergency operations.

**PALACE ENVOY—**Program HQ USAF uses for special higher headquarters TDY requirements. HQ USAF directs deployments supporting unique geographical or political missions (for example, United Nations missions, Military Liaison Teams (MLT), mobile training teams, and so on).

**PALACE EXERCISE—**Program the MPF, PERSCO Team, and support commands use to request individual augmentation for JCS and Air Force directed exercises.

**PALACE TRIP—**Program the MPF or MAJCOM uses to request inter- or intra-command TDY manning assistance to fill personnel shortages in unit manning.

**Cargo Deployment Function—**The installation focal point for monitoring all deployment and redeployment cargo processing activities.

**Cargo Movement Operations System (CMOS)—**An Air Force system that automates base shipment processes in support of peacetime and contingency operations. CMOS serves as the source data system essential to In-Transit Visibility of cargo and passenger movements.

**Collocated Units—**Units located on the same installation, regardless of host or tenant status, that planners may integrate into the base deployment guidance.

**Computer Aided Load Manifesting System (CALM)—**An Air Force system that automates load planning in support of worldwide deployment of forces and day-to-day cargo movement.

**Contingency Operation/Mobility Planning and Execution System (COMPES)—**The Air Force standard automated data processing subsystem of the Joint Operation Planning and Execution System (JOPES) that operations, logistics, and personnel planners at all command levels use to develop and maintain force packages and task requirements for operation plan time-phased force and deployment data.

**Contingency—**An emergency involving military forces caused by natural disasters, terrorists, subversives, or by required military operations. Contingencies require plans, rapid response, and special procedures to ensure the safety and readiness of personnel, installations, and equipment.

**Contingency Operations—**Operations involving the use of US military forces to achieve US objectives, usually in response to an emerging or unexpected crisis. Contingency operations may evolve into sustained military operations.

**Convoy—**A group of vehicles organized to ensure controlled and orderly movement with or without escort protection.

**Deliberate and Crisis Action Planning and Execution System (DCAPES)—**Replacement system for COMPES. Provides integrated planning and execution support system for operations, logistics, manpower and personnel functional communities. Integrates AF planning and execution automated processes into JOPES.

**Deployment—**The relocation of forces and material to desired areas of operations. Deployment encompasses all activities from origin or home station through destination, specifically including within the United States, inter-theater, and intra-theater movement legs, staging, and holding areas. (JP 1-02)

**Deployment Availability (DAV) Codes—**Personnel codes that identify an individual's current medical, legal, and administrative status for deployment eligibility (See **Attachment 2**).

**Deployment Control Center (DCC)—**The installation focal point for deployment operations. The DCC is responsible for all command and control requirements.

**Deployment Echelon—**A capability within a UTC that commanders must deploy as a single entity. Deployment echelons facilitate deployment planning by identifying a unit's capabilities, materiel, and personnel requirements and designating the sequence of movement. (Attachment 3, JCS Pub 6, Vol V, Part 4, MEFPAK or LOGMOD System Help and LOGMOD Users Guide.)

**Deployment Data File (DDF)—**File consisting of the LOGPLAN subsystem of LOGMOD and the mobility and plans files of the MANPER-B subsystem. Units use the two subsystems to prioritize deploying cargo and personnel.

**Deployment Processing Function (DPF)—**The installation focal point for monitoring all personnel processing activities.

**Deployment Work Centers—**Activities activated during deployments or exercises that process deploying personnel and equipment. These work centers include the deployment control center, cargo processing function, and the Personnel Deployment Function.

**Deployment Schedule of Events (DSOE) (DSOE Module of LOGMOD)—**Software application used to schedule, monitor and control deployment operations at an installation.

**Designed Operational Capabilities (DOC) Statement—**The document prepared by the parent MAJCOM that outlines each measured unit's capabilities and contains the unit's identification, mission tasking narrative, mission specifics, and measurable resources. The DOC statement is used for the

purposes of organizing, training and equipping the unit. It is not a tasking document for crisis operations (See MISCAP).

**Explosive Ordnance Recognition (EOR) Training—**Training to provide familiarization with the identification and marking of common threat unexploded ordinance (UXOs).

**Force Sizing (FORSIZE)—**Process that quantifies and reports the total Air Force manpower requirements.

**Geographically Separated Units (GSUs)—**Any unit separated from its servicing military personnel flight beyond a reasonable commuting distance.

**Hazardous Materials—**A substance or material that is capable of posing an unreasonable risk to health safety, and property when transported and has been so designated by AFJMAN 24-204. May also be referred to as hazardous cargo or dangerous goods.

**Host Unit—**The organization designated by the host MAJCOM or HQ USAF to furnish support to a tenant unit. The host unit develops, publishes, and maintains the base deployment guidance to support the deployment of all Air Force units from a particular base. ANGRC/LGX or AFRC/LGX make these designations for Air Force-gained Air National Guard and US Air Force Reserve Command (AFRC) units, respectively.

**Increment of Materiel—**Equipment, supplies, and spare parts that units use to plan and assemble loads for deploying cargo aircraft. Units normally design increments to fit a standard 463L pallet, but may combine material that supports more than one deployment capability to form an increment if space remains on the pallet. The increment 1) serves as the primary method of organizing material for deployment, 2) provides a means to establish a sequence for deployment and redeployment of deployment assets, 3) allows a shorthand method of communicating for cargo shipments, 4) provides a reference point for deployment planning in support of a specific operation plan, 5) provides a reference point for tailoring "non-standard UTCs to support the deployed mission, 6) provides a point of reference for control of equipment processing during deployments, 7) provides the basic planning element during aircraft load planning and cargo manifesting, and 8) provides the reference point for establishing and maintaining standardization among units with like weapons systems**. NOTE: Use UTC increments to maintain standardization through the pilot or non-pilot unit concept. Wheeled equipment constitute a single increment of materiel.**

**Installation Deployment Officer (IDO)—**The host unit officer who maintains base deployment guidance and directs and coordinates base deployments under the direction of the installation commander.

**Installation Deployment Plan (IDP)—**A plan, supplement, checklist, or any other means that provides detailed procedures, instructions, and comprehensive data required to expeditiously deploy people and equipment.

**Integrated Deployment System (IDS)—**System that integrates the following: Logistics Module (LOGMOD), Manpower and Personnel Module Base-Level (MANPER-B), Cargo Movement Operations System (CMOS), Computer Aided Load Manifesting System (CALM).

**In-Transit Visibility (ITV)—**The capability provided to a theater combatant commander to have visibility of units, personnel, and cargo while in-transit through the Defense Transportation System.

**Joint Operation Planning and Execution System (JOPES)—**A continuously evolving system that provides the foundation for conventional command and control by national- and theater-level

commanders and their staffs. It is designed to satisfy their information needs in the conduct of joint planning and operations. JOPES includes joint operation planning policies, procedures, and reporting structures supported by communications and ADP systems. JOPES is used to monitor, plan, and execute mobilization, deployment, employment, and sustainment activities associated with joint operations. (CJCSM 3122.02)

**Joint Personnel Recovery Division (JPRD)—**Responsible for Joint combat search and rescue operations.

**Law of Armed Conflict (LOAC)—**That part of international law that regulates the conduct of armed hostilities; often referred to as the Law of War.

**Limiting Factor (LIMFAC)—**A factor or condition that, either temporarily or permanently, impedes a mission (e.g., transportation network deficiencies, lack of in-place facilities, mal-positioned forces or materiel, extreme climatic conditions, distance, transit or over-flight rights, and political conditions). (JP 1-02)

**Load Plan—**A document specifying in detail the payload expressed in terms of passenger and freight carried on one aircraft for a specific destination.

**Logistics Force Packaging Systems (LOGFOR)—**A MEFPAK subsystem that provides equipment and materiel requirements and summarized transportation characteristics through its Logistics Detail component.

**Logistics Module (LOGMOD)—**Automates the development and distribution of UTC packages. At the Installation/Wing level, it provides the capability to schedule, monitor, and control movement of cargo and personnel via air or surface modes of transportation. Used at all levels of command. At HAF, it is used to analyze and approve UTC equipment detail, build the MEFPAK report, and update standard UTCs in JOPES. Used at MAJCOM level to analyze and approve UTC equipment detail and to report tailored UTCs to JOPES. LOGMOD is used at squadron/unit level Unit Deployment Managers to track unit personnel readiness and for selection of cargo and personnel to fulfill UTC requirements. Provides standard reports for management of authorized data and real-time data to commanders for planned or contingency operations.

**Logistics Planning Subsystem (LOGPLAN)—**A LOGMOD software package that planners use in building detailed materiel data to support specific OPLANs**.**

**Manpower and Equipment Force Packaging System (MEFPAK)—**A data system supporting contingency and general war planning with predefined and standardized personnel and equipment force pack-ages. MEFPAK, which operates in the command and control environment, comprises two subsystems: the Manpower Force Packaging System (MANFOR) and the Logistics Force Packaging System (LOGFOR). (AFMAN 10-401, Vol 1)

**Manpower and Personnel Module-Base Level (MANPER-B)—**The base level automated capabilities in COMPES supporting operation, contingency, deployment and exercise planning, readiness, and execution responsibilities.

**Manpower Force Packaging System (MANFOR)—**A MEFPAK subsystem that provides: 1) the title of the unit or force element and its unique Joint Chiefs of Staff Unit Type Code, 2) the mission capability statement (MISCAP) containing the definition of a UTC's capability, and 3) the manpower detail by function, grade (officers only), and Air Force specialty code required to meet the defined capability.

**Mission Capability Statement (MISCAP)—**A short paragraph describing the mission capabilities that planners expect of a specific UTC at execution. The statement usually contains pertinent information such as the type of base where commanders will deploy the unit, the unit's functional activities, and other augmentation requirements necessary to conduct specific missions.

**Operation Plan (OPLAN)—**A plan for one or more operations that deployed units carry out simultaneously or in a series of connected stages. Higher authorities normally issue OPLANs as directives based on stated assumptions to allow subordinate officers to prepare supporting plans and orders.

**Operational Taskings & Priorities (OT&P)—**Provides MAJCOM planners with a responsive automated processing system to task Air Force combat and support units during contingency operations. The operations module is the heart of the COMPES system. OT&P assimilate data from the MAJCOM logistics and manpower and personnel modules, and converts it into the format required by JOPES. OT&P provides a bridge between the JOPES database and MAJCOM refined planning data.

**Personnel Support for Contingency Operations (PERSCO) Team—**Assists the deployed commander in achieving 100% accountability of deployed forces by tracking and updating personnel Duty Status Change (DSC) reports in a timely manner.

**Process Owner—**The individual or organization having authority and responsibility for improving the quality of a deployment process.

**Redeployment—**The transfer of a unit, an individual, or supplies deployed in one area to another area, another location within the area, or to the zone of interior. (See JP 1-02)

**Resource Augmentation Duty (READY) Program—**A program that requires each installation to identify and validate its own temporary augmentation and local resource needs to meet local exercises, contingency, wartime, or emergency augmentation requirements. READY personnel do not deploy on READY duties.

**Shortfall—**The lack of forces, equipment, personnel, materiel, or capability, reflected as the difference between the resources identified as a plan requirement and those apportioned to a combatant commander for planning, that would adversely affect the command's ability to accomplish its mission. (JP 1-02)

**Standard UTC Reference File (SURF)—**File consisting of the LOGFOR subsystem of LOGMOD and the MANFOR subsystem of MANPER-B. It contains all the UTCs for which the base or unit is tasked, is the pilot unit for, or available to be tasked.

**STOP-LOSS—**Personnel action to stop personnel with needed AFSC's, skills and experiences from separating from the Air Force.

**Supported Commander—**(DoD) The commander having primary responsibility for all aspects of a task assigned by the Joint Strategic Capabilities Plan or other joint operation planning authority. In the context of joint operation planning, this term refers to the commander who prepares operation plans or operation orders in response to requirements of the Chairman of the Joint Chiefs of Staff. See also joint operation planning. (JP 1-02)

**Supporting Commander—**(DoD) A commander who provides augmentation forces or other support to a supported commander or who develops a supporting plan. Includes the designated combatant commands and Defense agencies as appropriate. See also supported commander; supporting plan. (JP 1-02)

**Tenant Unit—**An Air Force, Air Force Reserve Command (AFRC), or Air National Guard (ANG) organization or element that occupies the facilities of, or receives support from, another MAJCOM, AFRC, or ANG component.

**Transportation Control Number—**A 17 character control number which includes service code, unit line number (ULN), and increment number. (DoD 4500.32R Vol. 1, Attachment G)

**Unit Line Number (ULN)—**A seven-character alphanumeric field that uniquely describes a unit entry (line) in a JOPES TPFDD. Contains the Force Requirement Number (FRN) and what is commonly known as the Frag and Insert codes. (JP 1-02)

**Unit Type Code (UTC)—**A five-character alphanumeric designator uniquely identifying each Armed Forces unit. Note that COMPES uses a sixth digit that denotes the UTC status.

**War Reserve Materiel (WRM)—**Materiel required in addition to primary operating stocks and deployment equipment necessary to obtain objectives in the scenarios approved for sustainability planning in the Defense Planning Guidance.

## Attachment 2

## DUTY STATUS AND DEPLOYMENT AVAILABILITY CODES

**A2.1.** Duty status and Deployment Availability Status codes indicate personnel availability. Use these eligibility codes when determining the availability of personnel for deployment.

**A2.2. Eligibility Code Legend and Notes:**

**Table A2.1. Legend Code Table.**

| Value | Definition |
|---|---|
| CC | Commander's Choice |
| CC/C | Commander's Choice after consulting with the appropriate base agency (Legal, Medical, Social Actions, and so on ) |
| CC/R | Commander's Choice after recall and return station |
| NA | Not Available |
| 1 | If the TDY completion date is more than 30 calendar days before DOS or PCS, the member is available for deployment. Members who have less than 30 calendar days before DOS or PCS are not available. Unit commanders may waive this restriction provided TDY will not interfere with DOS or PCS processing and departure dates (DOS must not expire during TDY). Before approving a waiver, commanders must review all other available avenues in accordance with AFI 36-2110. |
| 2 | Military personnel who have adopted children are not available for deployment until four months after the effective date of adoption. For military couples, only one member is exempt. |
| 3 | Member is available unless a TDY restriction was approved by AFPC as specified in AFI 36-2110. |
| 4 | A time on station (TOS) minimum for personnel deploying is as follows:<br>1. Assigned in the CONUS or OS on a long tour—45 days<br>2. Assigned OS on a short tour—15 days<br>3. Assigned in the CONUS or OS, and was assigned from a short tour or CONUS isolation station—60 days<br>These periods allow military members and their families who have made a recent PCS move to stabilize their personal affairs and to satisfy essential post-PCS military and family requirements. Personnel with less than the minimum TOS are not available for deployment unless waived by the unit commander. Commanders may waive these deployment selection minimums; however, all other options must be reviewed before committing newly assigned personnel. |
| 5 | Ex-prisoners or evaders of capture during an armed conflict do not deploy to areas where they may be captured by the same combatants or by nations sympathetic with the combatants. |

**Table A2.2. Duty Status Eligibility Codes.**

| Duty Status-Code | Code Definition | EligibilityStatus |
|---|---|---|
| 00 | Present for duty | CC |
| 01 | Deceased | NA |
| 02 | Missing | NA |
| 03 | Ill/Injured (Casualty) | NA |
| 04 | Civil confinement (under arrest, pending trial, or awaiting sentence) | NA |
| 05 | Civil confinement (sentenced prisoner-30 days or more) | NA |
| 06 | Deserter | NA |
| 07 | Absent without leave (AWOL), includes ANG who can't be found | NA |
| 08 | Hospitalization, not assigned, or sick in quarters | NA |
| 09 | Leave (exclude delay en route) | CC/R |
| 10 | Assigned transient, departed permanent change of station or terminal leave (includes USAFR personnel transient to another USAFR unit) | NA |
| 11 | Assigned, not joined (includes USAFR personnel awaiting entry or initial active duty for training) | NA |
| 12 | Assessed, not joined, TDY enroute (includes USAFR personnel entered initial active duty for training) | NA |
| 13 | Hospitalization, assigned to patient squadron or hospital | NA |
| 14 | Not present for duty (NPFD), other (miscellaneous code; for example: jury duty, military control, etc.) | NA |
| 15 | Enroute to assigned station from temporary duty (TDY) station | NA |
| 16 | Military confinement (under arrest, pending trial, or awaiting sentence) | NA |
| 17 | Military confinement (sentenced prisoner, 30 days or more) | NA |
| 18 | Involuntarily ordered to active duty for 45 days—failed to participate in Air Reserve Force training | CC |
| 19 | Active duty for training (includes all members performing ADT in excess of 30 days, including the Health Professionals Scholarship program and school tours) | NA |
| 20 | TDY-contingency or rotational exercise | CC/R |
| 21 | TDY Manning assistance | CC/R |
| 22 | TDY-school (less than 20 weeks) | CC/R |
| 23 | TDY-bootstrap | CC/R |
| 24 | TDY-CONUS to CONUS | CC/R |
| 25 | TDY-CONUS to overseas | CC/R |
| 26 | TDY-Out of country (overseas personnel only) | CC/R |
| 27 | TDY-In country (overseas personnel only) | CC |
| 28 | Pending separation | CC(1) |
| 29 | Duty Status Whereabouts Unknown (DUSTWUN) | NA |

**Table A2.3. Deployment Availability Codes—Legal.**

| DAV Code | Code Definition | Eligibility Status |
|---|---|---|
| 28 | Unable to Handcarry/Possess Firearms/Ammunitions | NA |
| 29 | Conditional Release (ANG/AFR) | |
| 30 | Probation or rehabilitation program | CC |
| 31 | Control Roster | CC |
| 32 | Pending SP/AFOSI Investigations | CC |
| 33 | Administrative or International hold | CC/C |
| 34 | Material Witness | CC/C |
| 35 | Action under Article 15 - UCMJ | CC |
| 36 | Prisoner | NA |
| 37 | Pending Court Martial/Civil Trial | NA |
| 38 | Commander Directed Hold | CC |
| 39 | Adoptive parent | NA(2) |

**Table A2.4. Deployment Availability Codes—Physical.**

| DAV Code | Code Definition | Eligibility Status |
|---|---|---|
| 40 | Assignment limited to base with hospital | CC/C |
| 41 | Medical deferment | CC/C |
| 42 | Physical Evaluation Board (PEB) Action | CC/C |
| 43 | Fly status under review | CC/C |
| 44 | Exceptional Family Member Program (EFMP) deferment | CC(3) |
| 45 | Humanitarian assignment or deferment | NA |
| 46 | Chronic humanitarian | CC(3) |
| 47 | Substance Abuse Reorientation and Treatment (SART) program Tracks 4 and 5 | CC/C |
| 48 | Reserved | |
| 49 | Pregnancy deferment | NA |

**Table A2.5. Deployment Availability Codes—Time.**

| DAV Code | Code Definition | Eligibility Status |
|---|---|---|
| 50 | Projected separation (within 180 days) | CC(1) |
| 51 | Reserve Officer DOS (within 180 days) | CC(1) |
| 52 | 1st term airman DOS (within 180 days) | CC(1) |
| 53 | PCS inter-command (within 180 days) | CC(1) |
| 54 | PCS intra-command (within 180 days) | CC(1) |
| 55 | Date eligible for Return from Overseas (DEROS) (within 180 days) | CC(1) |
| 56 | Airman with less than 12 weeks TAFMS | NA |
| 57 | Time on Stations (TOS) less than 60 days | NA(4) |
| 58 | Airman declines to extend | NA(1) |
| 59 | Duty and travel restriction | CC/C |

**Table A2.6. Deployment Availability Code—Administrative.**

| DAV Code | Code Definition | Eligibility Status |
|---|---|---|
| 60 | Deferred from hostile fire zone | NA |
| 61 | Sole surviving son or daughter | NA |
| 62 | Functional category "L" - Pipeline | NA |
| 63 | Needs Special Security Investigation Required (SSIR) clearance | CC |
| 64 | Requires mobility training | CC |
| 65 | Commander's Option | CC |
| 66 | Conscientious objector | NA |
| 67 | Insufficient security clearance | CC |
| 68 | Voluntary expiration term of service (ANG) | CC(1) |
| 69 | Involuntary expiration term of service (ANG) | NA |
| 70 | Conditional release (ANG) | CC |
| 71 | Promotion deferral (ANG) | NA |
| 72 | Mandatory separation date (ANG) | NA |
| 73 | Age 60 (ANG) | NA |
| 74 | Involuntary discharge pending (ANG) | NA |
| 75 | Selective retention (ANG) | NA |
| 76 | Voluntary Discharge Request | NA |
| 77 | Other (ANG) | CC |
| 78 | Projected for reenlistment (within 180 days) | CC |
| 79 | Ex-Prisoner of War (POW) | NA(5) |
| 96 | ANG on special tour MPA man-days | CC |
| 97 | USAFR special tour MPA man-days | CC |
| 98 | ANG on EAD Presidential Call | CC |

NOTES:

1. If the TDY completion date is more than 30 calendar days before DOS or PCS, the member is available for deployment. Members who have less than 30 calendar days before DOS or PCS are not available. Unit commanders may waive this restriction provided TDY will not interfere with DOS or PCS processing and departure dates (DOS must not expire during TDY). Before approving a waiver, commanders must review all other available avenues in accordance with AFI 36-2110 (formerly AFRs 36-20 and 39-11).

2. Military personnel who have adopted children are not available for deployment until four months after the effective date of adoption. For military couples, only one member is exempt.

3. Member is available unless a TDY restriction was approved by AFPC as specified in AFI 36-2110.

4. A time on station (TOS) minimum for personnel deploying is as follows: Assigned in the CONUS or OS on a long tour—45 days; assigned OS on a short tour—15 days; assigned in the CONUS or OS, and was assigned from a short tour or CONUS isolation station—60 days. These periods allow military members and their families who have made a recent PCS move to stabilize their personal affairs and to satisfy essential post-PCS military and family requirements. Personnel with less than the minimum TOS are not available for deployment unless waived by the unit commander. Commanders may waive these deployment selection minimums; however, all other options must be reviewed before committing newly assigned personnel.

5. Ex-prisoners or evaders of capture during an armed conflict do not deploy to areas where they may be captured by the same combatants or by nations sympathetic with the combatants.

## Attachment 3

## DEPLOYMENT ECHELON CODES

**A3.1.** Deployment Echelon Codes is defined as a capability within an UTC that commanders must deploy as a single entity. Deployment echelons facilitate deployment planning by identifying a unit's capabilities, material, and personnel requirements and designating the sequence of movement. In Logistics Module (LOGMOD) or LOGMOD Stand Alone (LSA), they are identified as two-position alphanumeric characters. The first character (alpha) represents a type of deployment echelon (i.e., enroute support, initial support, tactical support, etc.) and the second character (numeric) represents an element/ priority (i.e., 1, 2, 3, etc.).

**A3.2.** This policy guidance is designed to meet EAF requirements standardizing airlift priorities and requirements. This information supersedes previously published guidance, serves as a tasking and as guidance for active and gained units on aviation, maintenance and munitions UTC development. Units will use cargo deployment echelons, to meet Initial Combat Capability (ICC) and Follow-on Combat Capability (FCC) and PMAI supportability requirements.

**A3.3.** Units developing new UTC's will build them to meet worldwide deployment, 30-day bare base capability, prioritizing cargo increments as directed in this guidance. We are emphasizing the need to build UTC's as they were intended, to manage critical airlift resources to meet CINC taskings. The end objective is to provide TRANSCOM and Component Commanders the ability to communicate and analyze movement requirements in the TPFDD more efficiently.

**A3.4.** All aviation (3 Series) UTC's will be developed with an ICC (7-day capability) using deployment echelon codes E1, E2, and S1. the same UTC's will also be built with an FOC (23-day capability) using deployment echelon codes T1-2 which are required to sustain operations from day 7 through day 30.

| First Position Deployment Echelon Title | | Second Position |
|---|---|---|
| A | Airlift Control Element | 1 though 9 |
| B | Base Support Element | 1 though 9 |
| C | Base Support Elements | 1 though 9 |
| D | Base Support Elements | 1 though 9 |
| E | En-Route Support Team | 1 though 9 |
| F | Pre-Flight Team | 1 though 9 |
| G | Aerial Port Element | 1 though 9 |
| H | AFFOR or Wing Headquarters | 1 though 9 |
| J | Air Crew Members | 1 though 9 |
| K | Mission Support Element | 1 though 9 |
| L | Medical Support Element | 1 though 9 |
| M | Munitions Support Element | 1 though 9 |
| N | Nuclear augmentation | 1 though 9 |
| P | Personnel | 1 though 9 |
| R | Aerospace Rescue & Recovery Service | 1 though 9 |
| S | Initial Support Element | 1 though 9 |
| T | Tactical Support Element | 1 though 9 |
| V | Aerospace audiovisual Services | 1 though 9 |
| W | Air Weather Service | 1 though 9 |
| X | Combat Support Group | 1 though 9 |
| Y | Group | 1 though 9 |
| Z | Other | 1 though 9 |

**General Deployment Echelon Codes Definitions**

**-A1-9,** Tactical Airlift Control Element (TALCE). A functional airlift organization (provisional) established to provide support to air elements at an air facility. Normally, it includes an operations function such as movement control and communications, a support function that relates to the air facility itself, and a liaison with appropriate airborne or other air units.

**-B1-9,** Base Support Element. A deployment echelon normally composed of personnel and materiel over and above the flight and tactical support element. The BSE will include all personnel and materiel required to support the most demanding operation plan, operation order, or tasking order under which a unit is tasked. This deployment echelon is normally used in 4F, JF, LW, PF, QF, RA, UFT, XFB, XFF, and XW series UTCs.

**-C1-9,** Base Support Element. A deployment echelon normally composed of personnel and materiel over and above the flight and tactical support element. The BSE will include all personnel and materiel required to support the most demanding operation plan, operation order, or tasking order under which a unit is tasked. This deployment echelon is normally used in 6 series UTCs.

**-D1-9,** Base Support Element. A deployment echelon normally composed of personnel and materiel over and above the flight and tactical support element. The BSE will include all personnel and materiel required to support the most demanding operation plan, operation order, or tasking order under which a unit is tasked.

**-E1-9.** En-Route Support Team. A functional package of personnel and materiel, consisting of selected personnel skills, equipment, and supplies necessary to service and perform limited specialized maintenance on tactical aircraft at an en route base so the aircraft can proceed to their destination base with a minimum of delay. This deployment echelon is used in aviation UTCs and has two parts: E1 consists of the limited specialized maintenance equipment and E2 consists of the En-Route engine change kit. If no enroute base is pre-identified, E1 and E2 will deploy after the aircraft leave home station and complete the initial support package.

**-F1-9,** Preflight Team.

**-G1-9**. Aerial Port Element.

**-H1-9,** AFFOR or Wing Headquarters. The HSE is used in planning for deployment of the AFFOR and or wing Headquarters elements. The HSE consists of people and materiel designed to establish command elements and a command structure for deploying forces. This deployment echelon is normally used in 7F, and 9A series UTCs.

**-I.** Not Used.

**-J1-9,**. Aircrew Members. This deployment echelon identifies aircrew members on MANPER-B products and is not normally used in LOGMOD.

**-K1-9,** Mission Support Element.

**-L1-9,** Medical Support Element. A deployment echelon used to identify medical assets within an F series UTC.

**-M1-9,** Munitions Support Element. All munitions (HG and HH Series) UTC's will be developed using deployment echelon codes M-1 – M-4, Munitions Support Elements (MSE). MSE includes personnel and equipment, which normally precedes the deploying aircraft to provide munitions capability at the employment location. All MSE cargo increments will be developed to meet ICC.

**Fighter aircraft MSE will be developed to segment as follows:**

18 to 24 Primary Mission Aircraft Inventory (PMAI) UTC's will use deployment echelon

**M1** for 6 to 8 PMAI

**M2** for 8 to 14 PMAI

**M3** for 14 to 18 PMAI

**M4** for 19 to 24 PMAI

Deployment Echelons M1 – M4 when deployed together would comprise the complete 24 PMAI UTC package. If the UTC tasked required a tailored 12 PMAI, M1 – M2 would be the only echelons deployed. If UTC deployed needed to increase it's PMAI to 18, at the same location, then M3 would be deployed.

**Bomber aircraft MSE will be developed to segment as follows:**

12 MPAI UTC's will use deployment echelon

**M1** for 2 to 3 PMAI

**M2** for 4 to 6 PMAI

**M3** for 7 to 9 PMAI

**M4** for 10 to 12 PMAI

Deployment Echelons M1 – M4 when deployed together would comprise a complete 12 PMAI UTC package. If the UTC tasked required a 4 PMAI, then M1 – M2 deployment echelons would be deployed. The basic concept is to use the second character of the deployment echelon to identify and prioritize the number of PMAI as described above.

**-N1-9.** Nuclear Augmentation.

**-O.** Not Used.

**-P1-9,** Personnel. This deployment element is used to identify Personnel tasked in RF series UTCs.

**-Q.** Not Used.

**-R1-9,** Aerospace Rescue and Recovery Service. This deployment echelon is used to identify personnel and materiel associated with the rescue UTCs. This deployment echelon is used in 9AR, 3TR, and HRR UTCs. (**NOTE: Pilot Units may elect to use E1, E2, E3, S1, and T1 in the 3TR series UTCs.)**

**S1-9.** Initial Support Element (ISE). This deployment echelon is organized and maintained for fighter, reconnaissance, bomber units, and other units designated by HQ ACC/DOXF. An ISE includes personnel and equipment, which normally precedes the deploying aircraft to provide initial support at the employment location. It is the basic building block for all aviation deployment packages. This deployment echelon is normally used in 3 Series UTC's.

**T1-9.** Tactical Support Element (TSE). A TSE includes personnel and materiel which, when combined with ISE and ESTAs, will provide a unit with the operational capabilities prescribed by the UTC MISCAP's. The T1 Echelon will bring the unit to the day 8-15 capability and the T2 Echelon will bring the unit from the day 16-30 capability. This deployment echelon is normally used in 3 Series UTC's.

All HE/HF Series Intermediate Level Maintenance (ILM) UTC's for Bomber/Fighter units will be developed using the prescribed deployment echelon codes listed below. ILM UTC includes personnel and equipment, which normally follows the deploying aircraft to provide maintenance support to sustain flying operations beyond 30 days.

**FIGHTER UNITS**

**T3** items required for Intermediate Level (IL) for any number of aircraft deployed. (i.e., special handling equipment)

**T4** equipment required to sustain 6/8 PMAI deployment

**T5** equipment required to sustain 12 PMAI deployment

**T6** equipment required to sustain 15/18 PMAI deployment

**T7** equipment required to sustain 24 PMAI deployment (used only by 24 PMAI units) deployment echelons T3 – T7 when deployed together would comprise the complete 24 PMAI UTC package. If the UTC tasked required a tailored 12 PMAI, T3 – T5 would be the only echelons deployed. If a deployed UTC needed to increase it's PMAI to 18, at the same location, then T6 would be deployed.

**BOMBER UNITS**

**T3** items required for Intermediate Level (IL) for any number of aircraft deployed (i.e., special handling equipment).

**T4** equipment required to sustain 3 PMAI deployment

**T5** equipment required to sustain 6 PMAI deployment

Deployment echelons T3 – T5 when deployed together would comprise a complete 6 PMAI UTC package. If the UTC tasked required a 3 PMAI, then T3 – T4 deployment echelons would be deployed. Dependent UTC's will be developed using the same criteria.

**-U.** Not used.

**-V1-9.** Aerospace Audio Visual Service.

**-W1-9,** Air Weather Service. This deployment echelon is used to identify personnel and materiel for weather UTCs. This deployment echelon is used in XW series UTCs.

**-X1-9,** Combat Support Group.

**-Y1-9,** Combat Support Group.

**-Z1-9,** Other. This deployment echelon denotes people and or equipment not easily fitting into other deployment echelons. When units elect to load Weapons, Ammunition, and Mobility Bags into LOGPLAN as an added requirement, this would be an appropriate deployment echelon to use in LOGMOD.

## Attachment 4

## DEPLOYMENT CHECKLISTS

**A4.1.** The following checklists are recommendations only and may be modified or deleted if not required.

1. DCC/IDO Checklist
2. Quick Reaction Checklist—DCC Logistics Plans Rep
3. Quick Reaction Checklist—DCC Transportation Rep
4. Quick Reaction Checklist—DCC Personnel Rep
5. Quick Reaction Checklist—DCC Administration
6. Common Cargo Processing—Choke-Points
7. Cargo Deployment Function Suggested Set-Up Checklist
8. Cargo Processing Procedures
9. Load Team Procedures
10. Emergency Data Station Checklist
11. Identification Station Checklist
12. Financial Station Checklist
13. Medical Station Checklist
14. Chaplain Station Checklist
15. Legal Counseling Station Checklist
16. Individual Readiness Folder Checklist
17. Unit Commander's Recommended Checklist
18. Individual Requirements Checklist
19. Recommended Unit Deployment Manager Responsibilities

***DCC/IDO Checklist***

1. Has the DCC staff been notified or required reporting times?
2. Has a realistic DSOE been published?
3. Is the DCC manned and ready within 1 hour of notification of a deployment including the complete tasking and airflow validation?
4. Have arrangements been made for continuous operations?
5. Have all work centers reported to the DCC as being manned and ready?
6. Have pre-charged radios been dispatched to the work centers as required?

7. Has a functional check of land telephone lines and radios been conducted?

8. Are all required publications and supplies on hand? (Reference Administration Checklist)

9. Has a comprehensive concept briefing been developed and presented on time? (Reference **Attachment 8**)

10. Has the PDF been notified of data required for orders preparation?

11. Has the DCC staff been briefed on the deployment changes, decisions, and significant events?

12. Do LOGMOD DSOE monitor screens or back-up status charts reflect DSOE information to monitor deployment progress?

13. Is information promptly forwarded to the appropriate work centers as received by the DCC?

14. Is entry to the DCC controlled?

15. Are schedule changes communicated verbally to the work centers and confirmed by changes to the DSOE?

16. Have required cargo couriers been identified to the DCC by tasked organizations?

17. Have classified couriers been identified if required?

18. Have the CDF and PDF been advised of the identification or cargo and classified couriers?

19. Are OPRs contacted by the DCC before the not later than (NLT) times on DSOE if completion times have not been reported?

20. Has the CDF advised the DCC of ACL verification or limitations as soon as support aircraft arrive?

21. Has the appropriate agency advised the DCC of the actual time of departure (ATD) of support aircraft?

22. Have required messages/reports been reviewed and dispatched?

23. Have feeding arrangements been coordinated for all deployment work centers and augmentees?

24. Have procedures been established to follow-up on and ensure correction of all discrepancies identified during personnel processing through the PDF?

25. Is LOGMOD Stand-Alone prepared and ready to act as a back-up system for the deployment?

26. Did the Troop Commander receive required deployment documentation IAW paragraph 5.6.1?

27. Has unit deployment information been reported to HHQ and JOPES IAW **Attachment 9**.

28. Has ITV data created in IDS been transmitted to GTN?

29. Has deployment documentation been collected and reported IAW paragraph 3.11.1?

***Quick Reaction Checklist—DCC Logistics Plans Representative***

Upon Notification:

1. Report to DCC.

2. Activate DCC ensuring communications system is operational.

3. Prepare DSOE making adjustments/changes as required. Ensure appropriate work centers/units are informed.

4. Assist the IDO in preparation of concept briefing.

5. Ensure DCC computers are set up and operational to monitor and post changes to the automated DSOE.

6. Attend concept briefing and distribute schedule of events.

7. Monitor status screens and boards. Ensure passengers and cargo will be loaded on support aircraft for on-time departure of support airlift.

8. Identify problems to the IDO to ensure that problems arising during the deployment are identified and corrected by the appropriate agency or commander as quickly as possible.

9. Upon receipt, ensure replacement data is validated with units and the supply representative before submitting equipment assistance requests to ensure they are valid LIMFACs. If valid LIMFACs, make necessary changes to the DSOE.

10. Ensure LOGMOD Stand-Alone is prepared and ready to act as a back-up system for the deployment.

***Quick Reaction Checklist—Transportation***

Upon Notification:

1. Report to DCC.

2. Notify personnel to man transportation deployment work centers. Load planners and/or a boom operation should report ASAP.

3. Complete tasking and airflow validation, and prepare DSOE, as necessary.

4. Ensure all transportation work centers are operational.

5. Review cargo marshaling and aircraft loading schedules for accuracy and feasibility.

6. Monitor and report the progress of transportation deployment activities to the DCC.

7. Review transportation messages and forward them to the IDO for release.

8. Notify the IDO of any problems or delays anticipated or encountered.

9. Maintain an activity log and thoroughly brief your replacement at shift change.

10. Post and track changes in the DSOE for transportation related functions defined as events in the DSOE

***Quick Reaction Checklist—DCC Personnel Representative***

Upon Notification:

1. Report to DCC.

2. Notify Personnel to set up and man the PDF work centers.

3. Complete tasking and airflow validation and review DSOE before publication.

4. Ensure the PDF is operational. Report the time activated and be ready to receive the or DRMD.

5. Upon receipt of vacancy notification, fill with on-base resources and notify the tasked unit.

6. Prepare personnel shortfall requests for all unfilled positions that must be filed and forward to the IDO.

7. Immediately notify the IDO of any problems or delays anticipated or encountered.

8. Maintain an activity logbook and thoroughly brief your replacement at shift change.

9. Post and track changes in the DSOE for personnel related functions defined as events in the DSOE.

***Quick Reaction Checklist—DCC Administration***

Upon Notification:

1. Report to DCC.

2. Obtain time hack and set clocks.

3. Ensure the following are on hand in DCC:

   a. Publications:

      (1) AFI 10-403.

      (2) AFJMAN 24-204.

      (3) Installation Deployment Plan.

      (4) DCC representatives log book.

   b. Administrative Materials:

      (1) Writing tablets.

      (2) Pencils and pens.

4. Set up concept briefing room:

   a. Check projector bulb and spare.

   b. Compile informational packages with DSOE, essential personnel roster, ground rules, and simulations (if possible).

5. Ensure only authorized personnel are allowed access to concept briefing.

6. Attend concept briefing:

   a. Take roll.

   b. Flip slides.

   c. Control distribution DSOE.

***Common Cargo Processing Choke-Points***

1. Hazardous material not in authorized packaging or not properly marked or labeled.

2. Hazardous material certification forms are missing or not accurate.

3. Dimensional data and weight on the placards or shipping labels does not agree with final load plan.

4. Secondary loaded items (e.g., items loaded on munitions trailers) are not properly restrained. This results in lengthy delays during actual loading operations.

5. Load team personnel either do not have required equipment (MHE and approach shoring) or they are not readily available at load start time.

6. Missing or illegible markings (axle weights, center of balance, etc.).

7. Missing venting equipment (nitrogen carts, lox carts, etc.) or qualified personnel to connect to the aircraft.

8. Lack of qualified drivers for MHE at the marshaling area and on-load teams.

9. Users not providing proper accompanying shoring (not approach shoring) and dunnage.

10. Lack of qualified drivers for special vehicles, e.g., fire truck, ATV's, etc.

11. Vehicle fuel levels do not match Shipper's Declaration for Dangerous Goods or loadplans.

12. Lack of advance coordination with beddown host nation to determine Customs clearance requirements and failure to provide proper documentation to comply with those requirements.

***Cargo Deployment Function (CDF) Set-Up Checklist***

1. Brief all assigned personnel on the nature of the deployment (include layout of the CDF if there have been changes or newly assigned personnel).

2. Ensure all required items (signs, cones, stanchions, rope, etc.) are available for identifying and establishing the in-check, marshaling, joint inspection, and loading areas.

3. Establish the in-check and marshaling work stations:

a. Suggested Communications equipment (e.g., hot lines, fax, and hand-held radios).

b. Suggested Materials—In-check/Joint inspection, and marshaling:

(1) Pre/final load plan for each support aircraft, and/or vehicle.

(2) DD Form 2133.

(3) Copies of the DSOE.

(4) Tape Measures.

(5) Tire gauges.

(6) Fuel level measuring devices made of non-spark-producing materials.

(7) Scales—suggest six portable scales for rolling stock, and one 463L pallet scale. Drive on/off scales are a plus if available (ensure all scales have been recently calibrated).

(8) Fire extinguishers (check requirements for authorized explosive holding area. At least two fire extinguishers rated at 2A:10BC or highest hazard).

(9) Hazardous material spill control kits.

(10) MHE—as a minimum, two 463L 10K forklifts and prime movers.

(11) Master sample book for the unit's hazardous cargo certification forms.

(12) AFJMAN 24-204 and 49 CFR

(13) Explosive holding area (limited quantities). Ensure area is placarded for the appropriate type of explosives and has the required fire and hazard symbols.

(14) Letters authorizing unit personnel to certify hazardous cargo (optional).

(15) Spare 463L pallets and nets; plastic pallet covers; dunnage; and tie-down equipment.

(16) Spare forms and labels (hazardous certification forms, and hazard warning labels, etc.).

(17) Template for KC-10 aircraft.

(18) Air Compressor.

(19) Safety equipment—reflective vests for night operations, hearing protection, gloves, etc.

c. Suggested Materials—Load teams:

(1) Final load plan for each support aircraft, truck or rail car.

(2) MHE—a minimum of three 463L Forklifts, two 25 K-loaders and prime movers (tugs, bobtails, etc.) with front mounted pintle hook.

(3) Truck loading ramps as required.

(4) Blocking and bracing materials as required.

(5) Shoring for aircraft, as required (these are emergency assets only and each unit is required to provide their own).

(6) Hazardous material placards (e.g., explosives).

(7) Safety equipment—reflector vests for night time operations, hearing protection, gloves, etc.

***Cargo Processing Procedures***

In-check personnel should:

1. Inventory each increment/shipment against the load list with the unit representative. Verify items are present or have the unit representative make appropriate adjustments to the load list. Make proper adjustments to the load list so correct data can be updated in LOGMOD. This is usually the source document load planners use for finalizing actual load plans.

2. Check all cargo documentation for consistency of proper markings, weight, and dimensions.

3. Verify hazardous cargo documentation.

4. Spot check tire pressure, weight, dimensions, and center of balance (CB) markings to ensure accuracy. Check increments/shipments if the placard and load list weights differ, dimensions are close to allowable limits or appear suspect, contain secondary loads (e.g., cargo on trailers), or had several item numbers deleted (e.g., mobility readiness spares packages pallets). If weight, dimensions, or CB differ from preplanned, make corrections and notify load planning. CB is not required for surface moves.

5. Conduct a thorough physical inspection of all increments/shipments to include opening doors on vehicles, as well as accessible doors and panels on ground support equipment (GSE). Restraints or tie-downs should not be disturbed unless necessary to determine fuel levels or prepare installed batteries. In-check personnel are not required to tear down pallets or unload cargo to search for hidden discrepancies.

6. Verify that vehicles and GSE are "reasonably free" of built-up dirt, fuel residue, oil, grease, and other flammable or corrosive residue. While "reasonably free" requires a subjective judgment, the goal of this requirement is to:

a. Prevent the shipment of leaking equipment that may endanger personnel or aircraft and vehicle safety. A leak is a loss of fluid or fuel that is readily detected or seen. Five or more drops a minute from a cooling system, crankcase, or gearbox is considered unacceptable, as well as any fuel leak or brake system leak. A damp or discolored seal is not considered a leak unless the above conditions exist.

b. Avoid the spread of agricultural pests and diseases that may exist in accumulations of built-up dirt and mud.

c. Avoid soiling or contaminating the aircraft floor and tie-down equipment with dirt, grease, leaking fluid, because this would endanger the safety of personnel working in the cargo compartment.

7. Make sure items loaded in the bed of vehicles and trailers are properly restrained for air shipment. All loose equipment should be secured before marshaling. Surface convoys also require the use of proper restraints. These ropes should not be removed, as they may be needed for onward surface movement at their destination. These ropes cannot, however, replace the use of cargo straps or chains to meet aircraft or over-the-road restraint criteria. Items too small to be properly secured should be placed in a restrained box or bin. Light cables and air or heater hoses on GSE may be secured to the unit using tape, rope, cord, or similar material.

8. If an item is not properly prepared or documentation is incorrect, it should be placed in the frustrated cargo area and the CDF OIC/NCOIC or DCC notified immediately, so that corrective action may be taken.

9. Ensure keys and combinations accompany the cargo to in-check. Lack of keys or combinations will cause cargo to be frustrated.

***Load Team Procedures***

1. Each load team should consist of a team chief and at least three handlers or operators. At the beginning of the shift, the team chief will conduct a safety briefing.

a. Safe operation of MHE (e.g., speed limits, use of chocks, and need for spotters).

b. Safe cargo handling (pallets must be pushed—not pulled, etc.).

c. Safety equipment for all load team members, e.g., safety-toed work boots, gloves, reflective gear, etc.

d. Safety procedures during EROs and concurrent refueling (if applicable).

2. The deploying unit should furnish drivers for specialized equipment, including all M-series vehicles. These drivers will load specialized equipment under the supervision of the loadmaster.

3. The load team chief will follow safe loading procedures at all times, as well as ensure:

a. Cargo is identified and segregated into loads according to the DSOEs.

b. The team has sufficient serviceable MHE to perform loading operations.

c. The team loads the aircraft or vehicle according to the final load plan or at the direction of the aircraft commander or designated representative.

d. Cargo is visually checked for obvious leaks and discrepancies before loading. Notify the RAMPCO of any problems so corrective action can be taken.

e. Brief the loadmaster on the load configuration and special loading requirements. Have the team load the aircraft under the loadmaster's supervision.

f. Load start and completion times are reported to the DCC.

g. When loading 463L pallets into aircraft, ensure that all placards are facing the same aisle-way side in the aircraft.

h. Cargo is properly loaded onto trucks with adequate tie-down, as directed by the vehicle operator. All items planned for the truck are loaded.

***Eligibility Station Checklist***

Check the eligibility of personnel identified to deploy. Use the following checklist-ensuring station is prepared to process deploying personnel.

| Action | YES | NO | N/A |
|---|---|---|---|
| Is the Deployment Schedule of Events on hand? | | | |
| Are eligibility rosters current and on hand? | | | |
| Has unit provided listing of personnel moving according to DSOE time-line? | | | |
| Ensuring personnel meet the eligibility requirements outlined in AFI 10-403, AFI 10-201, AFI 10-215, AFI 36-2110, and Supported Command's reporting instructions/processing guidance: | | | |
| -- Has commander or their designate representative completed the necessary waiver actions on those with commander level DAV codes? | | | |
| -- Personnel selected with DAV codes needing functional area waivering (e.g., medical, legal, and so on), has unit provided the necessary documentation waivering member? | | | |
| -- Personnel selected with non-waiverable DAV codes, has action been taken correcting the DAV status? | | | |
| -- Have AFSC, grade, and skill level substitutions been accomplished according to the above governing directives? | | | |
| ----If no to any of the above, has DCC and unit been contacted identifying the member's deployment ineligibility? | | | |
| PDF personnel processing assembly: | | | |
| -- Has a PDF representative been provided a document listing all personnel processing? | | | |
| -- After performing rollcall, is anyone missing or extra personnel identified? | | | |
| Has the PDF OIC or NCOIC been notified of any significant discrepancies? | | | |

***Orders Station Checklist***

Issue CED TDY orders authorizing movement and interacting with other wing deployment agencies in regards to personnel movement. Use the following checklist-ensuring station is prepared to process deploying personnel.

| Action | YES | NO | N/A |
|---|---|---|---|
| Support requirements, is the station equipped: | | | |
| - Unclassified communications (LMRs, correct ADPE) including a T-1 LAN connectivity required to support applicable components of IDS? | | | |
| - Secure Communications (SIPRnet) for access to GCCS and Supported Command's secure web sites? | | | |
| - Classified storage? | | | |
| - Classified operating environment for MANPER-B system? | | | |
| - Uninterrupted power supply (UPS)? | | | |
| Is the Deployment Schedule of Events on hand? | | | |
| Has unit provided an IDS generated product identifying personnel moving according to DSOE timeline? | | | |
| Are changes to plan requirements provided to DCC for processing into LOGMOD? | | | |
| Are unit filler and shortfall actions for unit personnel shortages coordinated with the personnel representative on the DCC staff and UDM? | | | |
| -- If shortfalls, has shortfall message been prepared and dispatched according to AFI 10-215 and Supported Command's reporting guidance/processing instructions? | | | |
| Once orders are issued: | | | |
| - Has CMOS interface been provided to TMO? | | | |
| - Has Troop Commander PAK assembled with appropriate documentation? | | | |
| - Has PDS transactions been generated and introduced into PDS? | | | |
| - Has DPT transaction been generated and introduced to the Red Mini? | | | |
| Has departure messages dispatched according to the timelines provided by AFI 10-215 or the Supported Command's reporting guidance/processing instructions? | | | |

***Emergency Data Station Checklist***

Check the accuracy of the DD Form 93 with the deploying person according to the processing method used for PDF movement. A sign located within the PDF is used to inform deploying personnel if they require the services of the American Red Cross (ARC). Use the following checklist if discrepancies are noted.

| Action | YES | NO | N/A |
|---|---|---|---|
| Is station equipped with: | | | |
| -- Deploying individual's DD Form 93, Record of Emergency Data? | | | |
| -- Typist and typewriters or equivalent? | | | |
| -- Blank DD Form 93? | | | |
| Has the member signed in the appropriate places? | | | |
| Has a witness signed the DD Form 93 (normally the typist)? | | | |
| Has the PDF OIC or NCOIC been notified of any significant discrepancies? | | | |
| Was the member provided a copy of the completed DD Form 93 for inclusion in the unit's Personnel Readiness Folder? | | | |
| Does the deploying person require American Red Cross (ARC) services? SEE NOTE | | | |

NOTE: The PDF OIC or NCOIC will contact ARC is needed.

The re-accomplishment of the DD Form 93 for base-level exercises or ORIs is at the discretion of the PDF OIC.

***Identification Station Checklist***

**1. Station Preparation.** Use the following checklist-ensuring station is prepared for processing personnel.

| Action | YES | NO | N/A |
|---|---|---|---|
| Is station equipped with: | | | |
| -- ID Tag machine? | | | |
| -- ID Tags and chains? | | | |
| -- Suitable amount of blank DD Form 2AF, DD Form 354, DD Form 489, and DD Form 1934? | | | |
| -- Are products available to verify accuracy of identification credentials? | | | |
| Procedures in place to prepare computer generated ID cards if the capability does not exist at the PDF? | | | |
| If a capability exists to make ID card at the PDF, is station equipped with necessary supplies and equipment? | | | |
| Has the PDF OIC or NCOIC been notified of any significant discrepancies? | | | |

**2. Information Review.** Complete the following on each individual needing identification screening according to the processing method used.

2.1. **DD Form 2AF, DD Form 1173, and AF Form 354, ID Card.** Verify accuracy of the following data; SSN, Full name (as much of middle name as space permits), Expiration date, and Current grade (**NOTE: SrA, A1C, Amn, and AB will read "Airman." Use actual grade for all others).**

2.2. **DD Form 489 and DD Form 1934 data must be verified.** Use DD Form 2AF for medics and chaplain personnel. Civilians should be checked against their civilian ID Card or through other available computer products for their correct SSN, name, etc.

2.3. **ID Tags.** Verify identification and accuracy of both the tags and replace as necessary.

2.4. **Passport & Visa.** If passports are required, check for signature and, if the expiration date occurs during the TDY period, notify either the PDF OIC or NCOIC. **NOTE:** Passports for military personnel are not normally required for contingency deployments. DD Form 2AF and valid TDY CED orders are normally sufficient for military operations. Possession and use of a passport are not a contingency or wartime critical items, but a peacetime management function. However, civilians may require a passport and visa. MAJCOMs will identify those personnel requiring passports for use during peacetime deployments and support of United Nations missions.

3. **Processing Discrepancies.** Re-accomplish forms with discrepancies. PDF personnel are responsible for verifying the accuracy of and need for new ID cards based on a review of the current card and the available personnel products. The ID cards, for some bases, are not prepared by the PDF—for those locations, the cards are prepared in the MPF. Notify the PDF OIC or NCOIC if any significant discrepancies are found.

***Financial Station Checklist***

1. Is the station equipped with:

a Typists and PCs, typewriters or equivalent

b The following blank forms:

(1) DD Form 1351, Travel Voucher, and 1351-1, Travel Allowance Payment List.

(2) DD Form 1351-6, Multiple Travel Payment Listing.

(3) AF Form 1548, Authorization to Start, Stop or Change and Allotment.

(4) Form W-4, Employees Withholding Allowance Certificate.

(5) AF Form 594, Authorization to Start, Stop or Change Basic Allowance for Quarters.

(6) DD Form 115, Military Payroll Money List, or AF Form 265, AFO Payment Authorization (JUMPS.)

(7) AF Form 1745, Address Change Form.

(8) DD Form 114, Military Pay Order.

(9) SF Form 1199a, Direct Deposit Sign Up Form.

NOTE: If CD ROM capability is available, forms and references may not be required.

c. The following directives (optional at PDF but are available on the base):

(1) AFMAN 177-373, Joint Uniform Pay System - JUMPS AFO Procedures.

(2) AFR 177-103, Travel Transaction at Base Level.

(3) JFTR, Volume 1, Joint Federal Travel Regulation, and JTR, Volume 2, Joint Travel Regulation

(4) AFR 90-13, Directory of Government Quarters and Dining Facilities.

2. Financial Station Personnel will:

a. Counsel individuals concerning their class X and D allotments.

b. Determine if individual desires advanced per diem.

c. If individuals have not been issued a government procured credit card, or the card is not usable at the deployed location, provide individuals with either advanced pay or maximum partial payment .

d. If locally paid, determine if the individual wants to be placed in the Financial Organization Program or if the paycheck should be sent to the TDY location. Remind members to have a sufficient number of blank checks available for their deployment.

e. If the deployment is over 60 days, check to see if the individual desires continued service by PDS AFO.

f. Notify the PDF OIC or NCOIC of any significant discrepancies.

3. If money is present, ensure all measures are taken IAW Resource Protection guidance.

***Medical Station Checklist***

1. A minimum of two medical technicians and one Flight Surgeon will staff the medical check station.

2. Ensure the following supplies and documents are on hand:

a. Necessary supplies to administer immunizations required for the deployment area.

b. Blank PHS Forms 731. For completion by the deploying individual. The completed PHS form 731 is collected by the senior public health officer/technician.

c. Equipment to adequately ventilate a patient with or without oral tracheal incubation.

d. An ambulance. A copy of AFR 161-13, Immunization and Chemoprophylaxsis (to become AFI 48-110).

ef. Telephone or radios for direct communication with the medical control center.

f. Immunization requirements for deployment location.

g. An immunization and medical kit in a ready condition for use in the PDF line and by the immunization team during deployment processing.

h. A highly visible sign informing deploying personnel to advise the immunization station, if they are under treatment, have medical problems (for example, pregnancy, diabetes, and so forth), or are on medication that requires resupply while deployed.

i. Ensure civilians have had a physical exam within the last 6 months prior to deployment. EKG's are required if civilians are over 40 years old.

3. Verify each individual's immunization record to ensure that immunization requirements have been met.

4. Administer the immunizations required for the deployment area:

a. Aircrew immunizations will be based on flying eligibility.

b. Personnel who receive immunizations during processing for wartime and contingencies will not be delayed from deploying.

5. Update the immunization record as required. Record the name, grade, SSN, types of immunization, and date; provide this information to the PDFO or PDFNCO.

6. Observe inoculated personnel for adverse reactions as stated in AFR 161-13.

7. Report to the Medical Control Center, PDF OIC / NCOIC those individuals having adverse reactions.

8. Notify the PDF OIC/ NCOIC immediately of personnel who are determined to be ineligible to deploy.

a. Medical personnel will be able to provide a record of those people who have and have not given a DNA sample.

b. Those people who have not given a DNA sample will be tested and data recorded.

9. Validate the deployment status of the deploying member's dental and mental health eligibility.

10. Ensure the troop commander/senior deploying medical member is provided each deploying member's DD Form 2766 and appropriate number of chemical prophylaxis for each deploying member (recommend records and chemical prophylaxis be bulk shipped by chalk).

***Chaplain Station Checklist***

1. Is a Chaplain Readiness Team (CRT) available at the activated PDFs?

2. Are Chaplain Service Support Personnel positioned at the chaplain station to dispense religious materials and act as a contact for persons wishing to see a chaplain?

3. Has a private room or area been designated for use by the chaplain for counseling?

4. Does the CRT inform the unit commander, PDF OIC/NCOIC, or troop commander of any personnel issues affecting the deployment of an individual?

5. Does the CRT ensure a table of religious materials is available and maintained?

6. Does the CRT provide a briefing to deploying personnel regarding religious, moral, and cultural contrasts at their destination?

***Legal Counseling Station Checklist***

1. Is the station equipped with:

   a. Typists and typewriters or computers (optional).

   b. Blank Power-of-Attorney Forms or other required legal documents.

   c. CD-ROM readers.

2. If requested, are individuals counseled concerning power of attorney, and are they completed if time permits?

3. Is it determined if deploying personnel have any legal problems that affect or are aggravated by the deployment? Notify the PDF OIC or NCOIC who will inform the deployed individual's unit of any problems that warrant follow-up action in the individual's absence.

4. Is the station manned by a paralegal with an attorney on call?

***Individual Readiness Folder Checklist***

1. If used, they should be reviewed periodically (as documented in the IDP.)

2. Items to be maintained as mandatory:

   a. Orientation briefing.

   b. Letter of selection for deployment position (primary or alternate).

   c. Locally developed individual requirements checklist.

   d. List of clothing requirements.

   e. Appointment letters (if used).

   f. Weapons/ammunition courier training documentation

3. Items recommended to be maintained in the folder as optional:

   a. ID tags and chains.

b. Powers of attorney.

c. Copy of DD Form 93.

d. Shot Record.

e. Baggage Tags.

f. Other items at the discretion of the individual or Commander.

g. Postal Change of Address Form.

h. Passport

NOTE: Items completed prior to appointment can be initialed by the unit deployment manager (UDM) or NCO.

***Unit Commander's Checklist***

1. Appoint a unit deployment manager and alternate if desired. Medical Readiness Officers/NCOs and deployment managers/NCOs should not be assigned to deployment positions.

2. Assign and train personnel to fill required deployment positions as identified in the IDP.

3. Verify eligibility of deployment personnel.

4.. Ensure all personnel identified or subject to deployment are thoroughly briefed on all aspects of their personal responsibilities for deployment. If deployment is to a chemical warfare (CW) threat area, include the following during the briefing: "You should have one complete operational chemical warfare defense equipment (CWDE) ensemble in your possession. If not, see the unit CWDE custodian or base supply individual equipment unit (IEU) prior to processing through the personnel processing function. You should hand-carry your CW gear on the deployment aircraft. The troop commander or aircraft commander should provide further instructions on donning CWDE prior to landing at your final destination. A briefing or printed instructions on local requirements and individual protective measures should be provided during your in-processing at your deployed location."

5. Preprocess deployment personnel:

a. Ensure each individual has the items required by the Individual Requirements Checklist.

b. Counsel personnel on the need to keep their personal affairs in order to minimize deployment problems. Advise them that if they desire to have a will, power of attorney, personal life or accident insurance, it is their responsibility to obtain them, before an exercise or actual deployment. When the commander deems such appropriate or necessary, individuals may be directed to consult a legal officer on any matter affecting legal preparedness for deployment. Commanders should use Commander's Call or other appropriate meetings to have base legal office provide an annual briefing to deploying personnel. Also, advise personnel to keep their DD Form 93, Record of Emergency Data, up to date.

c. Select and train classified couriers. If required for the control of unit cargo, select and train cargo couriers.

d. Select, train, and appoint a Unit Postal Officer, Unit Mail Clerk, and alternate Unit Mail Clerk.

e. Update the unit deployment personnel roster as changes occur.

f. Ensure unit self-aid and buddy care instructors provide preparatory training to all personnel identified and subject to deploy. Those identified to deploy should be current in self-aid and buddy care.

6. Maintain and exercise a current alert notification plan.

7. Establish procedures, checklists, and charts to ensure control of deployment personnel, equipment, and supplies.

8. Maintain authorized deployment equipment and supplies in a constant state of readiness and ensure equipment accountability is transferred when deployed.

9. Conduct deployment exercises and inspections as required, but to the extent necessary to determine the unit's capability to deploy personnel, equipment, and supplies as specified in the IDP. The UDM should send a report of all exercises including problems, questions, and recommendations to the IDO after each exercise or deployment.

10. Identify and report LIMFACs to the IDO.

11. Maintain close liaison with the IDO.

12. Ensure the training records of all required personnel are deployed when the period of temporary duty (TDY) exceeds 30 days.

13. On notification of a deployment, ensure the:

a. The pyramid alerting and recall system is executed for the unit.

b. The unit deployment work center is staffed.

c. The UDM carefully reviews the deployment data listing to ensure listed personnel are eligible for deployment and available for duty. Annotate the listing with the following codes: "C" next to the names of cargo couriers and "B" next to the names of classified couriers unless specified differently in the IDP. The roster should also be annotated to indicate personnel not available to deploy and substitute personnel.

(1) Signed by the unit commander or a designated representative to indicate the appropriate action has been taken to permit deployment of the individual (i.e., re-enlistments, extensions).

(2) Initialed by the unit commander or a designated representative to indicate "no action was required" before deployment of the individual (e.g., duty status change, return from leave, TDY, etc.).

d. Personnel are ready at the unit assembly area for movement to the PDF at the time called established by the DSOE. The unit should conduct a personnel eligibility verification, and clothing and equipment check on each person scheduled for deployment before reporting to the PDF for processing.

e. Equipment and supplies are prepared and delivered to the CDF at the time scheduled DSOE. This includes ensuring equipment custodians identify deploying equipment to base supply, so it is transferred to a deployed Custody Authorization/Custody Receipt Listing (CA/CRL) and flagged accordingly in the Air Force Equipment Management System (AFEMS).

f. The Deployment Control Center (DCC) is advised immediately when deviations to equipment requirements are necessary.

g. A unit representative attends the Deployment Concept Briefing and advises the DCC of any anticipated personnel and equipment changes or shortages and other limiting factors.

h. Coordinate transportation requirements in excess of unit capability with the ground transport work center dispatcher. Deploying personnel should not be required to provide personal transportation to the PDF except in an emergency.

i. The annotated updated deployment data listing is delivered to the PDF according to the IDP and DSOE.

j. Baggage tags are provided to unit personnel and completed before departing the unit.

k. Comply with unit commander responsibilities if included in the IDP.

l. Brief all personnel identified or subject to deploy on their responsibility to have their personal and family affairs in order. Commanders should use the Family Readiness Program Manager at the Family Support Center before deployments to ensure members eligible to deploy have addressed every possible family issue. Commanders should also establish procedures to follow up with families of deployed unit members. The Family Readiness Program Manager can help manage information and communications with families, coordinate efforts to support families, and help unit deal with the stress of deployments. Finally, the Family Readiness Manager should be consulted and involved with unit leadership and families at the onset and during the reunion phase of the deployment - one of the most critical times for families and active duty members.

***Individual Requirements Checklist***

1. Validation vs AF Form 4005, LOGMOD Form 4005, and this AFI.

a. DD Form 2AF, DD Form 1173, or AF Form 354

b. PHS Form 731

c. Passport, if required.

d Identification tags and chain.

e. AF Form 623, On-the-Job Training Record (with attached AF Form 1098, Special Task Certification and Recurring Training, if required) (required for military personnel only).

f. Current AF Form 141, Leave and Earnings Statement (N/A to reserve component personnel) (1 of the last 2 months).

g. Government drivers license, if applicable.

h. AF Form 1199, USAF Restricted Area Badge, if applicable.

i. DD Form 489 or 1934 (N/A for ANG units).

j. Two pairs of prescription eyeglasses, if applicable (N/A to Reserve component personnel).

k. One hearing aid and two sets of batteries, if applicable (N/A to Reserve Component personnel).

l. Personal clothing and equipment as determined by the host commander and documented in the IDP. Personal clothing should be packed in duffel bags, barracks bags, B-4 type bags or commercial luggage with rounded corners, but not in footlockers or trunks. Personal baggage limitations according to transportation regulations are two pieces at 66 pounds total weight excluding deployment bag and toolboxes. Carry-on baggage should be limited to one piece not to exceed 9 by 15 by 24 inches in dimension. (Excess baggage should be authorized in orders.)

m. Individual tool kits, professional kits, and any personal protective equipment required to perform duty. Hand-carry one complete operational CWD ensemble onboard deployment aircraft when applicable.

n. A 30-day supply of medications if under medical treatment. You should advise the PDF immunization personnel if you are currently receiving medical treatment or have a chronic medical problem so your record may be reviewed.

o. Spectacle inserts for gas masks, when applicable.

p. AF Form 1297, Temporary Issue Receipt, for cargo couriers if weapons are to be issued.

q. Completed AF Form 522, Grounds Weapons Training Data and USAF Firearms Qualification, detachable portion, (or automated equivalent) if weapons qualified.

r. Personal Legal Affairs. Members should make every effort to put their personal legal affairs in order well in advance of any deployment. This may include determining personal life insurance needs, or consulting a legal officer to determine whether a will, power of attorney, or other form of legal assistance would be necessary or beneficial to the member or any Family members. If a will, power of attorney, or other legal document is desired, the member should make necessary arrangements on a routine basis with the base Legal Assistance Office or a private attorney since such assistance will not normally be available on the deployment processing line.

***Unit Deployment Manager Responsibilities Checklist***

1. Are unit commanders and staff informed of the deployment status of unit personnel subject to deployment?

2. Can the unit deployment work center be immediately activated?

3. Is a copy of the IDP available in the unit deployment work center?

4. Is there a continuous training program to familiarize unit personnel with the IDP and with specific responsibilities during deployment?

5. Is a current pyramid unit recall notification plan in effect and can unit personnel be recalled in the event of telephone or communications failure?

6. Are unit deployment rosters complete and current and updated in LOGMOD/LOGMOD Stand-Alone?

7. Does a qualified primary and if available, alternate individual fill each deployment position assigned to the unit?

8. Are individuals notified (recommend in writing) when assigned to deployment?

9. If cargo couriers are required, is the unit deployment roster annotated?

10. Have designated official classified couriers been identified?

11. Have procedures been established to ensure individuals identified or subject to deployment are briefed on responsibilities in support of unit deployment to include:

a. Personal clothing and equipment.

b. Professional equipment and supplies.

c. Accuracy of documents and records necessary for deployments.

d. Individuals subject to deploy are responsible for ensuring their personal affairs are in order at all times and informing dependents there is a strong probability of very short notice deployments.

e. Available Family Support Center and Family Services programs.

f. Advising dependents to contact the local American Red Cross representative if any emergency arises which necessitates return of the individual.

g. Member's responsibility to contact medical personnel when a physical condition is detected that might limit capability to perform deployment duties so that an AF Form 422, Physical Profile Serial Report, may be prepared. Emergency -Essential (EE) federal civilians should inform their supervisor if they have a permanent or long-term medical problem that would prevent them from deploying. The supervisor would work with the civilian personnel flight to either designate an alternate E-E employee or reassign the E-E employee so the vacant E-E position can be filled.

h. Member's responsibility to maintain weight and fitness standards while deployed.

i. Availability of free legal assistance including preparation of wills, powers of attorney (including those not effective until actual deployment), other necessary documents and legal advice on any deployment related matters.

12. Have procedures been implemented to ensure compliance with the following requirements:

a. Deployment training is documented in the unit training records.

b. All immunizations for individuals subject to deployment are current at all times.

c. Individual's DD Form 2AF, Armed Forces Identification Card or AF Form 354, Civilian ID card, is current at all times.

d. Individual possesses two current identification tags and chain.

e. Individual is aware of responsibility to maintain a current DD Form 93.

f. Individuals are counseled regarding accounting and finance affairs (e.g., pay allotments, Sure Pay, DD Form 1337, Authorization/Designation for Emergency Pay and Allowances, etc.).

g. Medical and religious personnel have a DD Form 1934 and civilian employees other than medical and religious, have a DD Form 489.

13. Have individuals who are appointed to manage a given set of cargo increments, received hazardous cargo training to include maintaining accurate packing and load lists, and preparing DD Forms 1387-2 for classified hazardous cargo and the Commercial Shipper's Declaration for Dangerous Goods Form for all other hazardous cargo?

14. Are personnel ready at the unit assembly area for movement to the deployment processing line at the time established on the DSOE?

15 Are equipment and supplies properly prepared (using applicable checklists and instructions) and delivered to the CDF in-check area according to the DSOE?

16. Does the unit conduct a personnel eligibility verification, clothing, and equipment check for each person scheduled for a deployment before the individual reports to the PDF?

17. Are procedures established for a periodic inspection to verify individual's eligibility for deployment (recommend a quarterly inspection at minimum)?

18. Has the unit established procedures, checklists, and charts to ensure control of deployment personnel, equipment, and supplies?

19. Are authorized deployment equipment and supplies maintained in a constant state of readiness?

20. Have individuals been counseled on dependent care responsibilities?

# Attachment 5

# TRAINING

## A5.1. Recommended Deployment Training Requirements/Responsibilities.

| TYPE OF TRAINING | FREQUENCY | RECORD KEEPER |
|---|---|---|
| Annual Explosive Safety Training | Annual | Combat Readiness |
| Deployment Control Center, Installation Deployment Officer (IDO),Transportation Control Officer (TCO) Work Center Responsibilities | One time only | Logistics/Wing Plans & Combat Readiness |
| Cargo Preparation/Pallet Build-up | One time only | Combat Readiness |
| Hazardous Cargo Inspector's Course | One time only | Combat Readiness |
| Load Planning Overview | One time only | Combat Readiness |
| Controller | Annual | Logistics/Wing Plans |
| **Load Planning** | | |
| Cargo Preparation/Pallet Build-up | One time only | Combat Readiness |
| Hazardous Cargo Inspector's Course | Annual | Combat Readiness |
| Load Planning Orientation | One time only | Combat Readiness |
| Load Planning Overview (refresher) | Annual | Combat Readiness |
| AMC (Load Planning) Training | Biennial | Combat Readiness |
| **Ramp Coordinator** | | |
| Cargo Preparation/Pallet Build up | Annual | Combat Readiness and Resources |
| Hazardous Cargo Inspector's Course | Annual | Combat Readiness |
| Load Planning Overview | Annual | Combat Readiness |
| Ramp Coordinator | Biennial | Combat Readiness |
| **Personnel Deployment Function (PDF)** | | |
| Eligibility Check-in | As required | Military/Civilian Personnel Flights by changes |
| Medical Station | Annual | Medical Treatment Facility |
| Emergency Data Station | Annual | Military Personnel Flight |
| Orders Preparation | As required | Military Personnel Flight by changes |
| Identification Station | Annual | Military/Civilian Personnel Flight |
| Financial Station | Annual | Accounting & Finance Office |
| Chaplain Station | Annual | Chaplain's Office |
| Family Support Center Station | Annual | Family Support Center |
| Legal Counseling Station | Annual | Legal Office |
| **Cargo Deployment FunctionOIC/NCOIC** | | |
| Cargo Preparation/Pallet Build-up | One time only | Combat Readiness |
| Hazardous Cargo Inspector's Course | Biennial | Combat Readiness |
| Load Planning Overview | One time only | Combat Readiness |

| TYPE OF TRAINING | FREQUENCY | RECORD KEEPER |
|---|---|---|
| Cargo In-check/Marshaling | Annual | Combat Readiness |
| Baggage Procedures | Annual | Combat Readiness |
| Manifesting | Annual | Combat Readiness |
| Briefing/Holding/Loading | Annual | Combat Readiness |
| Aircraft Loading | Annual | Combat Readiness |
| **Cargo In-check/Marshaling** | | |
| Cargo Preparation/Pallet Build-up | Annual | Combat Readiness |
| Hazardous Cargo Inspector's Course | Annual | Combat Readiness |
| Cargo In-check/Marshaling | Annual | Combat Readiness |
| **Load Teams** | | |
| Cargo Preparation/Pallet Build-up | Annual | Combat Readiness |
| Hazardous Cargo Handler's Course | Annual | Combat Readiness |
| Aircraft Loading | Annual | Combat Readiness |
| Load Planning Overview | Annual | Combat Readiness |
| MHE Operators Training | Annual | Combat Readiness |
| **Unit** | | |
| Unit Deployment Manager (UDM) | As changes occur | Logistics/Wing Plans |
| Cargo Preparation/Pallet Build-up | Annual | Combat Readiness |
| Hazardous Cargo Tech Specialist Course | Annual | Combat Readiness |
| LOGMOD | Initial/recurring/as changes occur | Logistics/Wing Plans |
| IDS | Initial/recurring/as changes occur | Logistics/Military Personal Flight/ MO/Combat Readiness/TMO |
| MANPER-B | Initial/recurring/as changes occur | Military Personnel Flight/MO |
| Weapons & Ammunition Courier | If required | Base Supply/CATM |
| Classified Courier | As required | Unit Security Manager |

NOTE: The AEFC posts additional training requirements for AEF specific locations on the AEFC's WEBSITE.

## Attachment 6

## CARGO CATEGORY CODES

### A6.1. First position of the Cargo Category Code:

**CODE MEANING**

A - Vehicles (wheeled and tracked, self-propelled or non-self-propelled) that are neither security not hazardous cargo (see codes K and L below for security and hazardous vehicles) and are not suitable for road marching on overland deployment legs. See code R for road capable vehicles.

B - Uncrated NSDA (if self-deployable aircraft will not be deployed under their own power, they are identified as NSDA and their force movement characteristics reported).

C - Floating craft.

D - Hazardous non-vehicular cargo. (see E below).

E - Security non-security vehicular cargo or non-vehicular cargo which is both security and hazardous.

F - Cargo requiring refrigeration by the mover.

G - Bulk POL (not packaged).

H - Bulk granular cargo; i.e., crushed rock and sand.

J - Other non-vehicular cargo, including packaged POL, crated aircraft, TAT yellow, etc.

K - Vehicles designated as hazardous but not security cargo.

M - Ammunition

N - Nuclear weapons.

P - Chemical munitions.

R - Wheeled vehicles (self-propelled or non-self-propelled) neither security or hazardous cargo, suitable for road marching on overland deployment legs and capable of convoy speeds up to 40 MPH.

### A6.2. Second position of the Cargo Category Code.

**CODE MEANING**

0 - Non-air-transportable cargo: (a) exceeds any of the dimensions 1453" X 216" X 156" or (b) has a height between 114" and 156" and a width exceeding 144". See NOTE 1.

1 - Outsized cargo: Exceeds 1090" X 117" X 105" and is qualified by MILSTAMP aircraft air dimension code (too large for C-130/C-141).

2 - Oversized cargo: Exceeds usable dimensions of a 463L pallet (104" X 84" X 96") or height is established by the cargo envelop of the particular model of aircraft.

3 - Bulk cargo: Dimensions less than that of oversize cargo.

8 - Organic cargo: Non-TCC cargo; is either pre-positioned or will be transported via organic resources and does not require TCC support.

**A6.3. Third position of the Cargo Category Code** :

**CODE MEANING**

A - This cargo is normally carried on a vehicle that is organic to the unit (not applicable to non-unit-related cargo).

B - This cargo can be containerized, meets the dimensional criteria for a 20-foot container (225" X 84" X 82"), and does not exceed a weight of 20 short tons. See NOTE 2.

C - This cargo can be containerized, does not meet the dimensional criteria for a 20-foot container but does meet the dimensional criteria for a 40-foot container (468" X 84" X 86"), and does not exceed a weight of 30 short tons. See NOTE 3.

D - This cargo cannot or will not be containerized.

**NOTE 1. All dimensions are expressed in length X width X height. Width and height pertain to aircraft door limitations.**

**NOTE 2. Dimensions represent container door opening. Interior dimensions of a 20-foot container are 231" X 92" X 87". These containers are used for sealift.**

**NOTE 3. Dimensions represent container door opening. Interior dimensions of a 40-foot container are 472.5" X 92" X 92". These containers are used for sealift.**

## Attachment 7

## DEPLOYMENT INDICATOR CODES (DEPID)

**A7.1.** The deployment indicator code (DEPID), which identifies the deployment capability and composition of the UTC. Ref AFM 10-401.

| DEPID | NAME |
|---|---|
| 1 | Standard (in-being) (personnel & equipment) |
| 2 | Fixed provisional (notional) (personnel & equipment) |
| 3 | Augmentation (personnel & equipment) |
| 4 | Programmed (unit not activated yet) |
| 5 | (Reserved) |
| 6 | Variable (deployable, variable composition) |
| 9 | Permanent base (non-deployable organization) |
| E | Augmentation (equipment only) |
| P | Augmentation (personnel only) |

## Attachment 8

## CONCEPT OF OPERATIONS BRIEFING OUTLINE

1. Time Hack _____ (Convert all times to local time)

2. The classification of this briefing is (SECRET/CONFIDENTIAL/UNCLASSIED) (Access to classified briefing must be controlled as explained in DOD 5200.1-R/AFI 31-401)

3. Roll Call _____

4. Notification Time _____

5. Destination is classified/unclassified

6. Transportation flow schedule, ground rules, and Deployment Schedule of Events

7. Deployment is directed by _____(Authority)

8. Plan Identification Designator (PID) is _____ (**NOTE: OPLAN PIDs are normally classified)**

9. LOGPLAN and DSOE IDs are _____ (**NOTE: These IDs must be kept unclassified)**

10. Tasked Unit Type Codes, Unit Line Numbers and Units _____

11. Force Requirement Numbers (FRN) (if used) is _____

12. First flying unit/first unit to deploy _____

13. Personnel processing begins at _____

14. En route stops: Number (If classified) Location(s) (If unclassified) _____

15. Flight meals

   a. Number authorized per person _____

   b. Cost: Officers _____ Enlisted _____

16. Mode of transportation (Military or commerical air or surface)

17. First support aircraft (or other mode of transport) departs at _____

18. Exercise simulations and exceptions _____

19. Mobility bags (type and method of issue) _____

20. Training records and medical records requirements _____

21. Weapons and ammunition _____. Include specific guidance on issue, movement and storage procedures. **NOTE: Personnel must comply with all Weapons and Ground Safety directives.**

22. Special clothing requirements _____

23. Antidote agent requirements _____

24. Health Information for international travels, special immunizations etc, _____

25. Destination country's customs (Import limits and required equipment documentation) **NOTE: Do not compromise security if destination is classified**.

26. Office of Special Investigation (OSI) Threat briefing (if required).

27. Special religious and cultural concerns.

28. Orders Information:

a. Temporary Duty Duration

b. Duty On and Off Military Installation

c. Field Condition (Yes or No)

d. Member will hand carry (Item list) TMO will bulk ship (Item list)

e. Wear of Battle Dress Uniform (Woodland or Desert pattern)

f. Travel is to/from, or through Spain (Yes or No)

g. Group travel (Yes or No)

h. Special Billeting and Messing (Yes or No)

29. Remarks

## Attachment 9

## REPORTING UNIT LEVEL UNIT TYPE CODE (UTC) DATA TO JOPES

1. To support the CJCS requirement to develop a sourced TPFDD for the first seven days of a crisis within 72 hours, units will electronically transfer tailored DSOE files to the parent and/or gaining MAJCOM for review and for processing into JOPES through COMPES. This is an interim solution until the Deliberate and Crisis Action Planning and Execution Segments (DCAPES) is available. The tasking source specifies how and when to send the information.

2. During deliberate planning, tailored UTCs maintained in LOGMOD DSOE files for each MTW OPLAN the unit is tasked for will be reported to JOPES on an annual basis, and not later than 60 days after OPLAN update.

3. The installation Logistics Plans function will create UTC exports using the (Create Export OT&P/DCAPES LVL 4) DSOE function in LOGMOD. (Export all UTCs within each MTW specific DSOE ID). Once the file is created, export the file (using File Transfer Protocol (FTP) on the local personal computer running LOGMOD) to the Global LOGMOD server into the parent and/or gaining MAJCOM directory. The parent and/or gaining MAJCOM will provide the unit with the Internet Protocol (IP) address of the server and the directory to place the files into to meet this tasking. **NOTE: The UTC/ULN combinations passed in the interface file will match the UTC/ULN combinations in the JOPES OPLAN based on the PSEUDO PID relationship. Units will ensure the correct PSEUDO PID is used based on approved HQ USAF/XOXW guidance. Contact your MAJCOM LOGMOD Manager for a complete list of approved PSEUDO PIDs.**

4. During crisis action planning or in executed steady state OPLANs, crisis action planning files will be reported to JOPES on an “as directed” basis by the parent and/or gaining MAJCOM (Gaining MAJCOM for ANG and AFRC units).

5. For both deliberate and crisis action planning, the appropriate MAJCOM representative will down load the file(s) on to a disk/CD/tape from the global server and upload the file(s) into COMPES. Once in COMPES, the UTCs will automatically update JOPES.

## Attachment 10

## DEPLOYMENT SCHEDULE EVENTS—LOADING SCHEDULE

ANNEX

**DEPLOYMENT SCHEDULE OF EVENTS - LOADING SCHEDULE**

*(All Times Local)*

DATE 20010216

ORIGINAL X | CHANGE NUMBER 1

| LOAD/CHALK | LOAD PLANNING COMPLETE | TDY ORDERS COMPLETE | PAX MANIFEST TO QC | COD MANIFEST TO QC | CARGO LOADING START | CARGO LOADING COMPLETE | PAX LOADING START | PAX LOADING COMPLETE | ACFT COMMANDER BRIEFED | ETD |
|---|---|---|---|---|---|---|---|---|---|---|
| 1 | 0900/16 | 1100/16 | 1115/16 | 1200/16 | 1000/16 | 1200/16 | 1130/16 | 1215/16 | 1230/16 | 1300/16 |
| | | | | | | | | | | |
| | | | | | | | | | | |
| | | | | | | | | | | |
| | | | | | | | | | | |
| | | | | | | | | | | |
| | | | | | | | | | | |
| | | | | | | | | | | |
| | | | | | | | | | | |
| | | | | | | | | | | |
| | | | | | | | | | | |
| | | | | | | | | | | |
| | | | | | | | | | | |
| | | | | | | | | | | |
| | | | | | | | | | | |

REMARKS

S10007 - CLASSIFIED
S10008 - HAZARDOUS

COURIER
123: SMITH, DOE M.
124: WILLIAMS, JANE L.

SENSITIVE:012: SHOEMAKER, DON N.

AF FORM 2512, 20001201 *(EF-V1)* *PREVIOUS EDITION IS OBSOLETE*

## Attachment 11

## DEPLOYMENT SCHEDULE OF EVENTS—CARGO

| CHALK 1 | TYPE L1011 | DEPLOYMENT SCHEDULE OF EVENTS -CARGO (ALL TIMES LOCAL) | DATE: 2001/01/16 | |
|---|---|---|---|---|
| | | | ORIGINAL X | CHANGE# |

| UTC | ULN | UNIT | CARGO INCREMENT NUMBERS/ NOMENCLATURE | ASSEMBLY COMPLETE | CARGO MARSHALLING START | CARGO MARSHALLING COMPLETE | ETD |
|---|---|---|---|---|---|---|---|
| 3FQDF0 | LMNOP | 24FS | 21 0023 - NIT CART | 0645 | 0700 | 0900 | 1300 |
| | | | S1 0002 - 463L PALLET | | | | |
| | | | S1 0065 - MRSP PALLET | | | | |
| | | | S2 0060 - JACK PALLET | | | | |
| | | | S3 0061 - LOX CART | | | | |
| | | | S3 0007 - 463L PALLET | | | | |
| | | | S3 0008 - 463L PALLET | | | | |
| | | | M2 0008 - UAL | | | | |
| | | | | | | | |
| | | | | | | | |
| | | | | | | | |
| | | | | | | | |
| | | | | | | | |
| | | | | | | | |
| | | | | | | | |
| | | | | | | | |
| | | | | | | | |

REMARKS:

S1 0065 - CLASSIFIED
S3 0007 - HAZARDOUS

COURIERS:
123: SMITH, DOE, M.
124: WILLIAMS, JANE L.

SENSITIVE:
012: SHOEMAKER, DON N.

AF FORM 2511, 20001201 *(EF-V1)* PREVIOUS EDITION IS OBSOLETE

## Attachment 12

## DEPLOYMENT SCHEDULE OF EVENTS—PERSONNEL

| CHALK | TYPE | DEPLOYMENT SCHEDULE OF EVENTS -PERSONNEL | DATE2001/02/16 ORIGINAL X CHANGE# |
|---|---|---|---|

(ALL TIMES LOCAL)

| UTC | ULN | UNIT | DEPLOYMENT POSITION NUMBERS | NUMBER OF PAX | PAX PROCESSING START | PAX PROCESSING COMPLETE | ETD |
|---|---|---|---|---|---|---|---|
| 3FZDF0 | LMNOP | 24FS | 001, 012, 133, 035, 040 | 9 | 0900/16 | 1100/16 | |
| | | | 121, 122, 123, 124 | | | | |
| | | | | | | | |
| | | | | | | | |
| | | | | | | | |
| | | | | | | | |
| | | | | | | | |
| | | | | | | | |
| | | | | | | | |
| | | | | | | | |
| | | | | | | | |
| | | | | | | | |
| | | | | | | | |
| | | | | | | | |
| | | | | | | | |
| | | | | | | | |
| | | | | | | | |

REMARKS

COURIERS:
123: Smith, Doe M
124: Williams, Jane E.

SENSITIVE:
012: Shoemaker, Dan N.

AF FORM 2511A, 20001218 *(EF-VT)* PREVIOUS EDITIONS ARE OBSOLETE

**Attachment 13**

**PALLETIZED CARGO IN-CHECK FORM**

Page 1 of 2 CHALK NO_____DATE_____

TCN_____ NOMENCLATURE_____

UTC_____ START TIME_____COMPLETE TIME_____

GWT_____ DIMENSIONS: L___88”____ W_____108”_____ H_____

COPIES OF LOAD LIST: EXERCISES (4)_____DEPLOYMENTS (6)_____

**NOTE: Number of copies includes one that is to be attached to item in a waterproof envelope.**

COPIES OF SHIPPER’S DECLARATION FOR DANGEROUS GOODS (4)_____

COPIES OF DD FORM 1387-2 FOR SENSITIVE ITEMS (7)_____

**NOTE: Four (4) copies of DD Form 1387-2, one on each side, are to be attached to the pallet in a waterproof envelope.**

LABEL AFFIXED____HAZ CLASS
DIV_____,_____,_____,_____,_____,_____,_____

VENT REQUIRED_____**YES, NO, N/A**

| | | | |
|---|---|---|---|
| 1. Placard TCN, UTC, unit, weight and dimensions agree with load list? (Copy of load list on placard in waterproof envelope.) | | | |
| 2. There must be (3) three LOGMOD/LSA placards with correct information. Two must be located on the short side and long side of pallet and one in the increment packet. | | | |
| 3. Is a copy of the load list in a waterproof envelope attached to the short side of the pallet? (For KC-135, KC-10 and C-17 aircraft, the load list should be on the long side of the pallet). | | | |
| 4. Does the guard or courier for sensitive/classified material have a completed DD Form1907 available to transfer material to relieving authority? | | | |
| 5. Properly identified keys/combinations available with cargo (in packet or with courier**)? NOTE: Keys tagged; combinations in envelope**. | | | |
| 6. Is hazardous cargo visible and accessible (88" side on C-130, C-141, and C-5; 108" side for KC-135, KC-10 and C-17). Palletized DOT 5L Jerry Cans (the metal cans) must be drained. | | | |
| 7. Are hazardous items labeled as required and labels visible? | | | |
| 8. Is pallet free of bent lips and warped metal that can bind in an aircraft rail system? | | | |
| 9. Adequate tie-down? **Note: If pallet is 60" tall or less, 5,000 lb tie-down straps used in conjunction with nets. Ratchets will be on the same side of pallet**.<br>a. Netted properly? (No twists, right side out, any tears in nets, etc.).<br>b. Chained or strapped? (Do not intermix the two).<br>c. Plastic covers? (Explosives will not be covered with plastic).<br>d. Ensure straps, chains, nets, plastic, etc., do not extend below the top of the pallet surface.<br>e. No overhang? If overhang appears it should be on the fore or aft end of the pallet – check load plan for overhang authorization. | ___<br>___<br>___<br>___<br>___<br>___<br>__ | __<br>__<br>__<br>__<br>__<br>__<br>__<br>__<br>__ | ___<br>___<br>___<br>___<br>___<br>___<br>__ |
| 10. Free of corrosion, dirt, grease, snow, ice, water, etc.? | | | |
| 11. Plywood or suitable material between pallets and metal objects and metal to metal contact between hazardous containers including tie-down devices? | | | |
| 12. Pallet limitation of 250 psi exceeded? | | | |
| 13. Profile compatible with aircraft? Check load plan for type of aircraft to determine type profile required. | | | |
| 14. Safety aisles? (C-130 pallet positions 3, 4, and 6; C-5 pallet positions 1, 2, 35, and 36). | | | |
| 15. Loose cargo? | | | |
| 16. Dunnage? Three pieces (88" x 4" x 4") | | | |
| **INCHECKER'S SIGNATURE:** | | | |

**HAZARDOUS**

**YES, NO, N/A**

| | | | |
|---|---|---|---|
| 1. Four copies of Shipper's Declaration for Dangerous Goods? | | | |
| 2. Is the Shipper's Declaration for Dangerous Goods identical to the one in the Sample Book; prepared in accordance with AFJMAN 24-204? | | | |
| 3. Is certifying official authorized by letter and is a copy of letter in sample book? | | | |
| 4. Is cargo on the pallet compatible?(If not, is there proper separation IAW AFJM24-204, attachment 18 | | | |
| | | | |
| **DOCUMENTATION CLERKS SIGNATURE:** | | | |

**FRUSTRATED CARGO**

Time frustrated:_____Time unfrustrated:_____

Discrepancy:_____

**Attachment 14**

**WHEELED CARGO IN-CHECK FORM**

Page 1 of 2 CHALK NO_____ DATE_____

**TRAILER 1** (Hitch type)_____**TRAILER 2** (No hitch, may have tongue)

NOMENCLATURE or TCN_____ BUMPER NUMBER_____

UTC_____ START TIME_____ COMPLETE TIME_____

GWT_____ DIMENSIONS: L_____W_____H_____ CBFFE_____

**TONGUE LENGTH_____ */**HITCH LOCATION(D1)____ *HITCH WEIGHT(W1)_____*

D1 AXLE DIST_____ D2 AXLE DIST_____ D3 AXLE DIST_____ D4 AXLE DIST_____

W1 AXLE WT_____W2 AXLE WT_____3 AXLE WT_____W4 AXLE WT

AXLE 1 SPAN_____ AXLE 2 SPAN_____ AXLE 3 SPAN_____ AXLE 4 SPAN_____

**These items used only when applicable, if not applicable, leave blank.*

***Hitch location (Distance from forward most point of item to first contact point with ground or aircraft floor).*

COPIES OF LOAD LIST: EXERCISES (4)____ DEPLOYMENTS (6)____ SHORING (Y/N)_____

**NOTE: Number of copies includes one to be attached to item in a waterproof envelope.**

COPIES OF SHIPPER'S DECLARATION FOR DANGEROUS GOODS (4)_____

COPIES OF DD FORM 1387-2 FOR SENSITIVE ITEMS (4)_____

**NOTE: 1 copy of DD Form 1387-2 is to be attached to item in a waterproof envelope.**

LABEL AFFIXED____HAZ CLASS DIV_____,_____,_____,_____,_____

VENT REQUIRED_____**YES, NO, N/A**

| | | | |
|---|---|---|---|
| 1. Placard TCN, UTC, unit, weight and dimensions agree with load list? (copy of load list on placard in waterproof envelope.) | | | |
| 2. Two (2) LOGMOD/LSA placards with correct information are required, one located on front left side of the item, and one in the increment package. | | | |
| 3. Chocks and/or brakes used to prevent equipment from rolling? | | | |
| 4. Does guard or couriers for sensitive/classified material have a completed DD Form 1907 available to transfer material to relieving authority. | | | |
| 5. Properly identified keys/combinations available with cargo (in packet or with courier. **NOTE: Keys tagged, combinations in sealed envelope**. | | | |
| 6. Center of Balance (C/B) marked on both sides of item (minimum 1" wide by 3" tall with the words "center of balance" above the mark or the letters "CB" on either side of the mark. | | | |
| 7. Fuel level checked? **MAXIMUMS -** Self-propelled units 3/4 tank when loaded on the aircraft floor,1/2 tank when loaded on aircraft ramp. Engine-powered support equipment will not exceed 1/2 tank. 1/2 tank maximum for all equipment loaded on KC-10 or KC-135 aircraft. Items disconnected from prime mover with tongue resting on aircraft floor must be drained. (Does not require purging). | | | |
| 8 . Fuel caps. Securely closed if vented; non-vented caps will be closed and backed off to vented position (1/4 to 1/2 turn). | | | |
| 9. Dot 5L Jerry cans (the metal fuel cans) secured in approved racks; 5 gallons maximum; seal not leaking. | | | |
| 10. Fuel lines on AM32-60 and AM32-60A not leaking. Ensure fuel valve located under rear fuel tank is closed. | | | |
| 11. Items identified as fuel leakers (MC-1A, MC-2A, H-1 heater, etc.) will be drained but are not required to be purged. **NOTE: Model 2MC-1A may be shipped with fuel in tank for Chapter 3 operations. Units must identify these items and stencil "2MC-1A" on the item.** | | | |
| 12. Batteries secured; filler caps tight; terminals and cables protected from short circuits? | | | |
| 13. Cross-country GWT not exceeded? (M-Series vehicles) **NOTE: Check ID/ GWT plate.** | | | |
| 14. Mechanical condition? Engine runs/stops; brakes work; fluid leaks. | | | |
| 15. Is tire pressure within 10% of required psi (100-psi maximum)? Tires free of rocks or other foreign objects? | | | |
| 16. Doors, panels and loose items secured; equipment reduced? | | | |
| 17. Vent kits for cryogenic carts available? Vent hose connected? | | | |
| 18. Reasonably free of grease, oil, dirt, snow, ice, etc. | | | |
| 19. Safety pin in pintle hook? | | | |
| **INCHECKER'S SIGNATURE:** | | | |

**HAZARDOUS**
**YES, NO, N/A**

| | | | |
|---|---|---|---|
| 1. Four copies of Shipper's Declaration for Dangerous Goods? | | | |
| 2. Is the Shipper's Declaration for Dangerous Goods identical to the one in the Sample Book; prepared in accordance with AFJMAN 24-204? | | | |
| 3. Is certifying official authorized by letter and is a copy of letter in sample book? | | | |
| 4. Is cargo compatible? (If not, is there proper separation IAW AFJMAN 24-204, attachment 18. | | | |
| | | | |
| **DOCUMENTATION CLERKS SIGNATURE:** | | | |

**FRUSTRATED CARGO**

Time frustrated:_____Time unfrustrated:_____

Discrepancy:_____

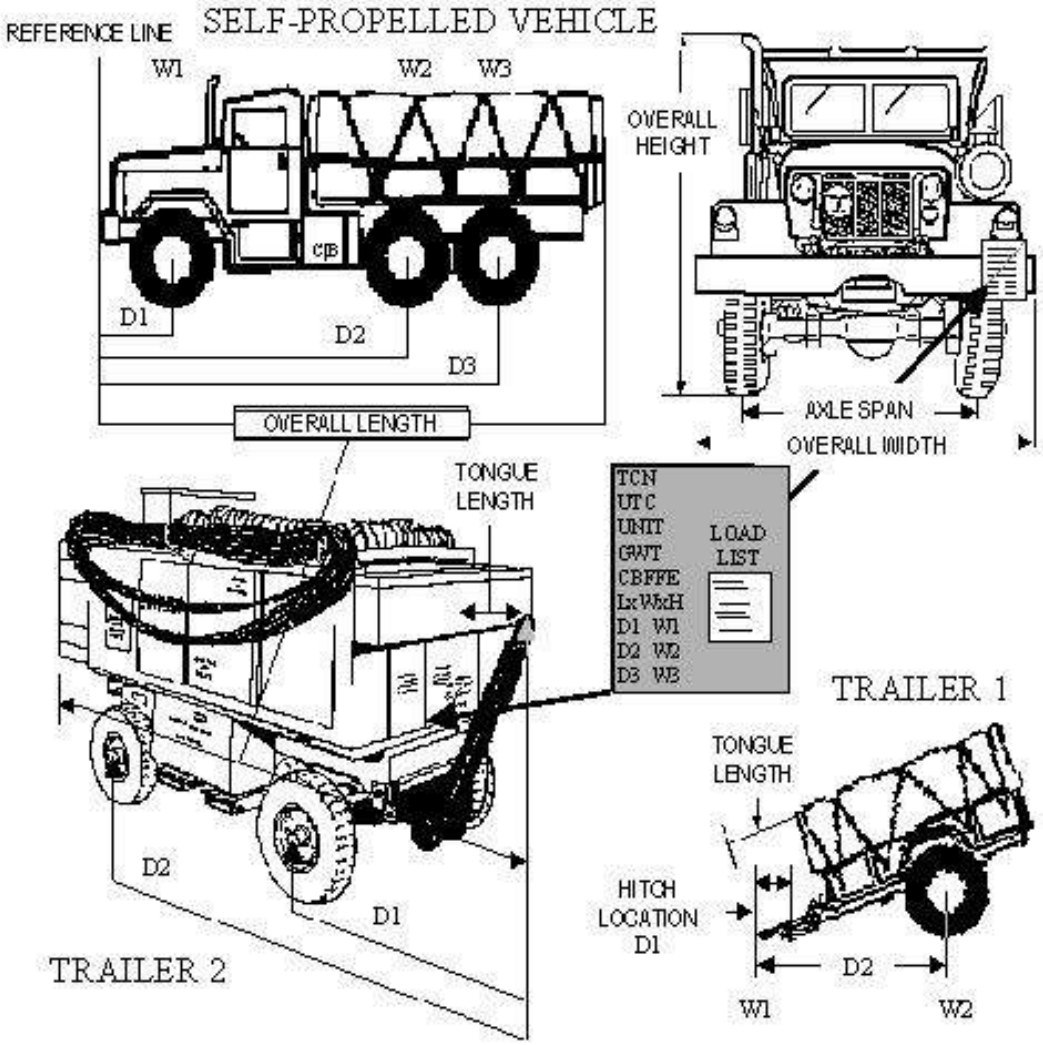
SELF-PROPELLED VEHICLE
REFERENCE LINE
W1
W2
W3
CB
D1
D2
D3
OVERALL LENGTH
OVERALL HEIGHT
AXLE SPAN
OVERALL WIDTH
TONGUE LENGTH
TCN
UTC
UNIT
GWT
CBFFE
LxWxH
D1 W1
D2 W2
D3 W3
LOAD LIST
TRAILER 1
TRAILER 2
TONGUE LENGTH
HITCH LOCATION D1
D2
W1
W2

## Attachment 15 (Added-AFSPC)

### SAMPLE MEMORANDUM FOR WING DEPLOYMENT UTC READINESS TRAINING REQUIREMENTS

DEPARTMENT OF THE AIR FORCE

(Your Wing)

MEMORANDUM FOR HQ AFSPC/LGXP

FROM: Your Address

SUBJECT: Wing Deployment UTC Readiness Training Requirements

1. As per AFI10-403_AFSPCSUP1, para 1.6.2., the following training information is provided:

| Required Training | Total Deployment Taskings | Number Trained | Percent Trained |
|---|---|---|---|
| LOAC | | | |
| SABC | | | |
| Force Protection | | | |
| EOR | | | |
| Small Arms | | | |
| NBCDT | | | |
| Personal and Family | | | |
| Readiness Briefings | | | |

2. Your wing POC and DSN #

Signed

Installation Deployment Officer

## Attachment 16 (Added-AFSPC)

### SAMPLE MEMORANDUM FOR NOTIFICATION FOR SELECTION OF DEPLOYMENT

MEMORANDUM FOR ALL (Wing Personnel Assigned to Deployment Position)

FROM: (Unit Deployment Manager's CC)

SUBJECT: Notification of Selection for Deployment/Deployment Orientation Briefing

1. You have been assigned to fill a deployment position or you have a deployable AFSC. Because of this, you must fulfill certain requirements to ensure your readiness. Review your deployment folder to identify any items you lack, then correct those deficiencies. Each individual assigned to deploy has the responsibility of accomplishing all actions to ensure they are ready for contingency deployments or exercises.

2. Report to the Immunization Clinic for any shots needed. Each unit receives an updated automated product from the Immunization Clinic reflecting current immunizations status of all unit personnel to include those identified to deploy. It is your responsibility to ensure you receive all immunizations required for deployment.

**3.** 3. You have been briefed on all required clothing and personal items that you must have in your possession for deployment processing. You are subject to inspection to ensure all requirements are being met. Additionally, you must ensure you meet the standards of AFI 36-2903, *Dress and Personal Appearance of Air Force Personnel*, at all times, and all uniforms must be in serviceable condition.

4. Since you may deploy with no advance notice, you must keep your personal affairs up-to-date at all times. You must immediately report any changes to your dependents status; make adequate financial arrangements for your dependents; prepare a will and powers of attorney as needed; and inform your dependents of services available, i.e., Family Services, Personal Affairs, American Red Cross, AF Aid Society.

5. If a physical condition exists that limits your duties, obtain an AF Form 422, Physical Profile Serial Report, and ensure your Unit Deployment Manager is aware of the profile.

6. You will normally be notified of a contingency or exercise by telephone or directly from your supervisor, Unit Deployment Manager, or Commander. If notification is during non-duty hours, report to your duty section with your personal and professional gear. If you are TDY, you will be notified and provided instructions through the organization you are temporarily assigned.

Signature of Unit Commander or Designated Representative

Unit of Assignment

1st Ind, Deploying Appointee

MEMORANDUM FOR (Unit Commander)

I certify that I have read and understand the contents of this memorandum, and will begin all necessary administrative deployment requirements within 10 working days of the date of my signature.

_____ _____

Date Signature of Appointee

## Attachment 17 (Added-AFSPC)

## SAMPLE MEMORANDUM FOR DEPLOYMENT ACKNOWLEDGEMENT

MEMORANDUM FOR (Squadron Personnel)

FROM: (Squadron UDM)

SUBJECT: Acknowledgement Memorandum

1. I am aware of the need to have all my deployment clothing available and ready to deploy at any time. I also realize that I must review my deployment records with my supervisor semi-annually, to ensure that the information contained is correct and up-to-date.
2. I have personally checked the mandatory items of my deployment clothing in my possession and they are in serviceable condition and meet AFI 36-2903, *Dress and Personal Appearance of Air Force Personnel*, standards.
3. I understand the need to keep all of my personal affairs in order. If problems arise, I will notify my supervisor or flight chief immediately.
4. My supervisor and/or the squadron's Unit Deployment Manager have briefed me on my deployment responsibilities.
5. I realize it is my responsibility to notify my supervisor and the squadron's Unit Deployment Manager of any situation that could affect my ability to deploy, such as medical profiles, TDYs, leaves, etc.
6. Any questions may be directed to my supervisor or the squadron's Unit Deployment Manager.

_____ _____

Signature of Member Date

_____ _____

Signature of UDM Date

## Attachment 18 (Added-AFSPC)

## SAMPLE PERSONAL AFFAIRS FACT SHEET

Personal Affairs Fact Sheet

For Personnel on Mobility

All military personnel must fulfill the following requirements, as appropriate, immediately after being placed on mobility. Action on some items will be time consuming and often one month or more will be required to complete the action.

1. DD Form 93, RECORD OF EMERGENCY DATA: Be sure this form is correct and kept up-to-date. Insure that any discrepancies such as changes caused by birth, death, marriage, or change of address, is immediately provided to the MPF Customer Service Center for updating your DD Form 93. This form is one of the most important documents in your military records. It is the only document the Air Force will utilize to notify your next of kin in the event you become a casualty (seriously ill, injured, or deceased).
2. SERVICEMEN'S GROUP LIFE INSURANCE (SGLI): Make certain your SGLI beneficiaries are properly listed. Check your Servicemen's Group Life Insurance (SGLI) certificate in your personnel record at your servicing MPF, Customer Service Element. You may name any person(s) you desire as the beneficiary. By name designations must be checked and/or changed upon marriage, divorce, birth of children, death of a beneficiary, etc. If you designate your beneficiary as "By Law," the insurance is paid in this order: spouse, children in equal shares, your parents in equal shares, and then siblings in equal shares. You do not need to update the beneficiary designation "By Law" upon marriage, divorce, etc.
3. ID TAGS, SPECTACLES, and HEARING AIDS: All personnel on mobility must have two metal identification tags (dog tags) on their possession. Personnel who wear eyeglasses or contacts must obtain two pairs of prescription eyeglasses and gas mask inserts. Contacts are not authorized for wear in the gas mask. Personnel with hearing aids must have two sets of batteries.
4. IMMUNIZATIONS: All personnel departing must have immunization records (PHS Form 731, International Certificate of Vaccination) properly completed, and insure that immunizations are up-to-date.
5. PASSPORTS: All personnel on mobility must have a birth certificate with the raised seal. This will avoid delays in the event passports must be obtained for a particular deployment. Your Unit Deployment Manager will direct you when to apply for a passport.
6. ALLOTMENTS: It is highly recommended that you establish allotments to support your family. This is especially helpful to personnel on mobility. Many types of allotments are available; visit Accounting and Finance and select the ones which best suit your needs.
7. PERSONAL BUSINESS MATTERS: Do not leave your dependents uninformed concerning your personal business affairs and transactions. Make suitable arrangements for payment of all indebtedness before departure.
8. LEGAL AFFAIRS: Generally, personnel who have title to real property or who have children should have a will drawn up. Also, a power of attorney would be helpful for your dependents to obtain emergency financial assistance through the Air Force Aid Society or other lending agency. In your absence, if your dependents are faced with a problem requiring immediate financial aid that

falls within the policy of the Air Force Aid Society, an interest free loan is possible and can be made to the spouse if a valid power of attorney is in effect; otherwise, the sponsor must be contacted for approval. Also, important documents should be placed in a safe, but accessible place, known by your designated beneficiaries. Joint bank accounts should be established with rights of survivorship; otherwise, they may be unavailable to your survivors for a period of time.

9. WILLS: A will is a written document in which you direct the disposition of your property or death. You will certainly want to consider discussing with an attorney the possibility of drawing up a will. You should visit the Base Legal Office as soon as possible, since it takes approximately ten days to two weeks to have a will initiated for you.

10. POWERS OF ATTORNEY: If there is business that must be transacted in your home while you are away, you may need a Power of Attorney. Powers of Attorney are of two types: special and general. A special Power of Attorney is limited in scope. In the special power of attorney, you direct that your attorney-in-fact (this can be any person you choose) do certain specific transactions in your behalf. A general Power of Attorney is a much broader document, it grants your attorney-in-fact the power to act for you in almost all respects in which you could act for yourself. Since the general Power of Attorney is such a broad and sweeping document, you should carefully consider the necessity of having a general Power of Attorney before you execute one. If you want a general Power of Attorney, an attorney should counsel you before you execute it.