BY ORDER OF THE
SECRETARY OF THE AIR FORCE

AIR FORCE MANUAL 11-247

4 JUNE 2004

Flying Operations

T-1A FLYING FUNDAMENTALS

COMPLIANCE WITH THIS PUBLICATION IS MANDATORY

NOTICE: This publication is available digitally on the AFDPO WWW site at: **http://www.e-publishing.af.mil.**

OPR: HQ AETC/DOFV
(Lt Col Victor Rick)
Supersedes AFMAN 11-247, 14 April 2003.

Certified by: HQ USAF/XOO
(Brig Gen Teresa M. Peterson)
Pages: 118
Distribution: F

This manual implements AFPD 11-2, *Aircraft Rules and Procedures*. It contains the basic principles, procedures, and techniques applicable to all personnel operating T-1A aircraft. Air Education and Training Command (AETC) is the lead command for this manual. It applies to Air Force Reserve Command pilots flying T-1A aircraft; it does not apply to the Air National Guard. While this manual primarily addresses the student pilot, it provides the general guidelines for all T-1A pilots. It addresses basic flying tasks and planning considerations and is designed to be used in conjunction with AFI 11-2T-1, Volume 1, *T-1A Aircrew Training;* AFI 11-2T-1, Volume 2, *T-1A Aircrew Evaluation Criteria;* AFI 11-2T-1, Volume 3, *T-1A Operations Procedures;* and technical order (TO) 1T-1A-1, *Flight Manual, USAF Series T-1A Aircraft.*

This manual presents a solid foundation on which student training missions can be accomplished and instructor continuation training maintained. It is not designed to be used as a step-by-step checklist of how to employ the T-1A. When you encounter situations not specifically covered by this publication, use safety considerations as a guide in determining the best course of action.

The 19 AF/CC and HQ AETC/DO must approve all supplements and supplement changes to this manual. Refer recommended changes and conflicts between this and other publications to HQ AETC/DOFV, 1 F Street, Suite 2, Randolph AFB TX 78150-4325, on AF Form 847, **Recommendation for Change of Publication.**

Attachment 1 contains a glossary of references and supporting information. Maintain and dispose of records created as a result of prescribed processes in accordance with AFMAN 37-139, *Records Disposition Schedule.*

SUMMARY OF REVISIONS

This interim change (IC) adds guidance for the yaw damper (YD) failure demonstration (paragraph **3.3.2.5.**); adds a further responsibility for lead when the wingman calls "blind" (paragraph **8.2.3.2.**); clarifies the visual formation position (paragraph **8.12.1.**) and the offset position (paragraph **8.12.2.**); adds

"blind" (paragraphs **8.2.4.1.** and **8.13.2.1.**), "knock it-off" (paragraph **8.12.10.**), and "terminate" (paragraph **8.12.11.**) calls for formation maneuvering; clarifies formation configuration and pattern entry procedures (paragraph **8.17.1.3.**); and updates **Attachment 1**. See the last attachment for the complete IC. A (|) indicates revision from the previous edition.

Chapter 1—GENERAL INFORMATION **9**

1.1. Introduction: 9
1.2. Airmanship and Situational Awareness. 9
1.3. Cockpit/Crew Resource Management (CRM): 9
1.4. Prior Training Comparison: 10
1.5. Composite Flight. 10
1.6. Safety: 10
1.7. Transfer of Aircraft Control. 11
1.8. Seat Swap. 11
1.9. Preflight Briefing. 12
1.10. Preflight. 12
1.11. Instrument Cockpit Check. 12
1.12. Ground Operations: 12
1.13. Ground and In-Flight Checks. 12
1.14. Taxiing: 12
1.15. Takeoff and Landing Data (TOLD): 13
1.16. Area Orientation. 13
1.17. Clearing: 13
1.18. Radio Procedures: 14

Chapter 2—TAKEOFF, CLIMB, AND LEVELOFF **15**

2.1. Preflight. 15
2.2. Takeoff Options: 15
Figure 2.1. Takeoff Rotation. 16
2.3. Climb: 17
2.4. Leveloff: 17

Chapter 3—TRANSITION **18**

3.1. Basic Maneuvers: 18
3.2. Turns: 18

Figure 3.1. Thirty-Degree (30o) AOB Visual Reference. 19
Figure 3.2. Forty-Five-Degree (45o) AOB Visual Reference. 19
3.3. Flight Characteristics Demonstrations: 20
3.4. Traffic Pattern Stalls and Approach-to-Stall Parameters: 21
3.5. Traffic Pattern Stalls and Approach-to-Stall Procedures: 22
3.6. Slow-Flight Parameters. 23
3.7. Unusual Attitudes. 24

Chapter 4—TRAFFIC PATTERNS AND LANDINGS 26
4.1. Visual Approach Guidance: 26
4.2. Approach Speed (Vapp): 26
Figure 4.1. Minimum Speeds for Pattern and Landing Operations. 27
4.3. Wind Analysis: 27
4.4. Straight-In Pattern: 27
Figure 4.2. VFR Straight-In Pattern. 28
4.5. Rectangular Pattern: 29
4.6. Tactical Pattern: 29
Figure 4.3. Tactical Pattern. 30
4.7. VFR Closed Pattern (Rectangular or Tactical): 31
4.8. Normal Landings: 31
4.9. No-Flap Landings: 32
4.10. Single-Engine Landings: 32
4.11. Touch-and-Go Landings: 33
4.12. Go-Around: 33
4.13. Pattern and Landing Irregularities: 34

Chapter 5—NIGHT FLYING 36
5.1. Spatial Disorientation: 36
5.2. Inspections and Checks: 36
5.3. Taxiing. 36
5.4. Takeoff. 37
5.5. Night Operations: 37
5.6. Traffic Patterns. 37

Chapter 6—INSTRUMENT FLYING **39**
6.1. Instrument Cross-Check. 39
6.2. Instrument Takeoff: 39
6.3. Instrument Departure: 39
6.4. Leveloff: 40
6.5. Change of Airspeed. 40
6.6. Turns. 40
6.7. Climbs and Descents. 41
6.8. Vertical-S Maneuvers: 41
Table 6.1. Summary of Power Settings and Airspeeds. 41
6.9. IFR Unusual Attitudes. 41
6.10. Course and Arc Intercepts and Fix-to-Fix Navigation: 42
6.11. Holding. 42
6.12. Jet Penetrations and Descents. 42
6.13. Instrument Approaches: 43
6.14. Transition to Landing: 44
6.15. Circling Approach: 45
6.16. Missed Approach: 46
6.17. Flight Management System (FMS): 46
6.18. Electronic Flight Instrument System (EFIS). 46

Chapter 7—NAVIGATION **47**
7.1. Requirements. 47
7.2. Preflight Planning and Briefing: 47
7.3. Ground Operations: 47
7.4. Departure: 48
7.5. En Route: 48
Figure 7.1. Sample AF Form 70, Pilot's Flight Plan and Flight Log. 49
7.6. Arrival and Landing: 50
Figure 7.2. Visual Effect of a Wide Runway. 52

Chapter 8—FORMATION **53**
8.1. Overview: 53

8.2. Responsibilities: 53
8.3. Briefing: 54
8.4. Radio Procedures: 54
8.5. Visual Signals. 54
8.6. In-Flight Checks. 55
8.7. Lost Wingman Procedures. 55
Figure 8.1. Lost Wingman. 55
Figure 8.2. Cell Formation Lost Wingman. 57
Figure 8.3. Establishing IFR Separation. 58
8.8. A/A TACAN. 58
8.9. Ground Operations. 59
Figure 8.4. Runway Lineup. 60
8.10. Takeoffs: 61
8.11. Departure and Climbout: 62
8.12. Visual Formation: 63
Figure 8.5. Visual Formation Position. 63
Figure 8.6. Offset Position. 64
Figure 8.7. Visual Position Turns. 65
Figure 8.8. Offset Turns. 66
8.13. Cell Formation: 69
Figure 8.9. Cell Formation Position. 69
Table 8.1. Wingman Turn Delay for Cell Formation. 70
8.14. Breakup. 70
8.15. Position Change: 70
Figure 8.10. Position Change. 71
8.16. Breakout: 71
8.17. Recovery: 72
Figure 8.11. Formation Downwind Entry. 72
Figure 8.12. Pitchout Rollout Interval. 73
Figure 8.13. Landing Interval. 74

Chapter 9—AIR REFUELING **75**

9.1. Mission Planning. 75

Figure 9.1. Required Reporting Points for Air Refueling Track 001 (East). 75

9.2. Military Assumes Responsibility for Separation of Aircraft (MARSA). 76

9.3. Navigation: 76

Table 9.1. Timing Chart (No Wind). 76

9.4. Weather Radar: 77

9.5. Cockpit Configuration: 77

9.6. Tanker Procedures: 77

Figure 9.2. Air Refueling Track. 78

Figure 9.3. Turn Range and Offset Charts. 78

9.7. Receiver Procedures: 79

9.8. Rendezvous: 80

Figure 9.4. Air Refueling Rendezvous. 81

9.9. Closure Procedures: 81

Figure 9.5. Closure. 82

9.10. Overrun Procedures: 82

9.11. Precontact Position: 83

Figure 9.6. Precontact Position. 83

9.12. Maneuvering Requirements for the Tanker: 83

9.13. Receiver Procedures for Maneuvering From Precontact to Contact: 84

Figure 9.7. Contact Position. 85

9.14. Maintaining Contact Position: 85

Figure 9.8. Contact Envelope. 86

9.15. Breakaway Maneuver: 86

9.16. End Air Refueling (E A/R) Point. 87

Chapter 10—LOW-LEVEL NAVIGATION AND FORMATION AIRDROP **88**

Section 10A Overview 88

10.1. Mission Objective. 88

10.2. Formation Considerations: 88

Section 10B Low-Level Navigation on a Military Training Route (MTR) 88

10.3. Purpose. 88
10.4. Preflight Coordination. 88
10.5. Mission Planning: 88
10.6. Route Development: 89
10.7. Map-Marking. 90
10.8. In-Flight Preparation: 90
10.9. Descent and Leveloff Procedures: 91
10.10. Orbit Procedures. 92
10.11. Fuel Considerations: 92
10.12. Flying the Route: 93
10.13. Time Management Procedures: 95
10.14. Course Corrections: 95
10.15. Reorientation: 96
10.16. Turn Point Procedures. 96
10.17. Hazards at Low Level: 97
10.18. Mountainous Terrain: 97
10.19. Communication Requirements: 97
10.20. Low-Level Emergencies: 98
Section 10C Airdrop Procedures 98
10.21. Airdrop Considerations. 98
10.22. Cockpit/Crew Resource Management (CRM). 98
10.23. Parameters. 98
10.24. Mission Plan. 99
10.25. En Route Navigation. 99
10.26. Altitude. 99
10.27. Airspeed: 99
Section 10D Lead Airdrop 99
10.28. Route. 99
10.29. Slowdown. 99
Figure 10.1. Slowdown. 100
10.30. DZ Acquisition: 100
10.31. Airdrop Maneuver: 100

Figure 10.2. Airdrop Maneuver. 101
10.32. Escape. 101
Figure 10.3. Escape. 102
10.33. Lead Change. 102
10.34. Route Exit. 102
Section 10E Wingman Airdrop 102
10.35. Altitude. 102
10.36. Spacing. 102
10.37. Airdrop Maneuver. 102
10.38. Completion of Drop. 102
Section 10F Formation Airdrop Slowdown 103
10.39. Communication Procedures. 103
10.40. Slowdown Point. 103
Section 10G Egress 103
10.41. Parameters. 103
10.42. Procedures: 103
Section 10H Low-Level Route Abort Procedures 103
10.43. Responsibilities: 103
Section 10I Conclusion 104
10.44. A Final Warning. 104
10.45. Preflight Planning and Briefings. 104
Section 10J Administrative Information 104
10.46. Forms Adopted. 104
Attachment 1—GLOSSARY OF REFERENCES AND SUPPORTING INFORMATION 105
Attachment 2—IC 2004-1 TO AFMAN 11-247, T-1A FLYING FUNDAMENTALS 109

Chapter 1

GENERAL INFORMATION

1.1. Introduction:

1.1.1. The objective of this manual is to provide techniques and procedures to aid you in becoming a professional military pilot. It provides the guidance to develop the skills and attitudes learned during primary flying training and necessary to prepare you for assignments in various airlift, tanker, and bomber (ATB) aircraft. To accomplish this goal, you must attain the highest degree of proficiency possible. This requires initiative, good judgment, trained reflexes, and skillful flying, which come only as a result of study, practice, and determination.

1.1.2. Good study habits are essential. Every detail is important if you expect to be a safe, professional pilot. Some important information from other directives is included in this manual, but in no way is this information to be considered all-inclusive. The majority of the skills and techniques you develop in pilot training will come from your assigned instructor, other instructors you fly with, academic instructors, and your own experiences. As you gain experience and confidence as a pilot, you will also be developing your ability to use sound judgment.

1.1.3. This manual and other directives are vital to flying operations. However, because of the many different situations you will encounter as a pilot, these publications can only provide a basis for good judgment. They do not replace it. TO 1T-1A-1, *Flight Manual, USAF Series T-1A Aircraft,* contains detailed instructions for inspections, checks, and procedures. It also provides valuable background information necessary to understand the aircraft systems and why procedures and checks have been established.

1.1.4. This publication; AFI 11-2T-1, Volumes 1, 2 and 3; and TO 1T-1A-1 (T1A Flight Manual) complement each other.

1.2. Airmanship and Situational Awareness. Airmanship is a learned skill involving the consideration and evaluation of all factors that influence flying or mission accomplishment. Good situational awareness involves keeping track of the many duties required to effectively fly a crew-type aircraft. These duties include monitoring flight and ground conditions, tasking and monitoring the activities of the crew, and evaluating and responding to rapidly changing conditions. Soliciting and evaluating inputs from the crew will not only improve your airmanship and situational awareness, but help improve the airmanship and situational awareness of the crew.

1.3. Cockpit/Crew Resource Management (CRM):

1.3.1. Coordinating and using all available resources is essential to successful mission accomplishment for any crew-type aircraft. CRM is the ability to make effective use of all resources available to the crew. Effective use of the aircrew (pilot, copilot, or instructor pilot [IP]) and ground crew (air traffic controller, maintenance personnel, weather forecaster, supervisor of flying [SOF], squadron supervisor [SUP], and others) result in better crew decisions, both on the ground and in the air.

1.3.2. T-1A CRM lessons concentrate on teamwork and leadership. A good crewmember performs tasks and provides timely inputs that support successful mission accomplishment. An aircraft commander assigns tasks that contribute to successful mission accomplishment to each member of the

crew. An aircraft commander also solicits ideas from the crew, evaluates those ideas, and makes decisions based on those ideas. He or she encourages the crew to make timely and appropriate inputs throughout the mission. This constant crew interaction raises the level of situational awareness for the entire crew and enhances mission performance.

1.3.3. The descriptions of crew actions herein are written with reference to the pilot, copilot, and jumpseat pilot. For example, an IP may be occupying the right seat and, during inter-cockpit communications or checklists, will be referred to as "copilot" based on his or her seating position. Additionally, because a pilot may fly from either seat, duties must be accomplished differently depending on who has aircraft control. Therefore, references will also be made to the pilot flying (PF) and the pilot not flying (PNF) for required actions. All pilots will fly in all crew positions on the T-1A, and it is imperative to fully understand the crew duties and coordination process described and explained in Section IV of TO-1T-1A-1 (T-1A flight manual).

1.3.4. Normally, the PNF will not actuate controls unless directed otherwise. During operations, the PF will call for the appropriate checklist. The PNF will announce or verbalize all checklist items and ensure correct procedures are followed for that particular step.

1.4. Prior Training Comparison:

1.4.1. **Handling Characteristics.** The T-1A has some unique handling characteristics. With the use of spoilers as flight control surfaces, the T-1A may not be as responsive in a roll as your previous aircraft. You will also discover the control yoke is not as sensitive or as easy to operate as a stick. As a result, the T-1A is not as responsive to control inputs. However, the T-1A has impressive engine performance and power response.

1.4.2. **Visibility.** Visibility from the T-1A flight deck is restricted. Increased vigilance is required to ensure effective clearing techniques are used.

1.5. Composite Flight. Due to an ever-present threat of bird strikes and midair collisions, pilots must master composite-flight procedures early in their flight training. Composite flight uses outside references supported by flight instruments to establish and maintain desired flight attitudes and ensure the air space is clear. It enables crews to maintain precise aircraft control while clearing for other aircraft. To establish and maintain aircraft attitude, position the nose of the aircraft in relation to the horizon and cross-check the flight instruments to ensure desired performance is being maintained. (See **Chapter 3** for examples of T-1A visual references.) As part of good crew coordination and flight safety, the crew should always be concentrating on aircraft control and clearing.

1.6. Safety:

1.6.1. Aviation safety requires use of proper procedures and good judgment. It is based on a thorough understanding of the aircraft and good flying techniques.

1.6.2. The operating environment and weather play large roles in safety. Restricted visibility can make clearing in the vicinity of an airfield and traffic separation very difficult. The heat and humidity of summer months can cause additional problems to safety--reducing aircraft performance, increasing takeoff distances, and decreasing climb rates. The heat and humidity may also lead to pilot fatigue and dehydration.

1.6.3. While flying the T-1A, you will have many opportunities to operate outside the familiar home-base environment. You will encounter airfields with civilian or joint military and civilian use. Safety requires that you complete a thorough review of all information about the unfamiliar fields to which you will fly.

1.6.4. Your psychological condition plays an extremely important part in aviation safety. Stress, both emotional and physical, can result from heavy training requirements, conflicts caused by personal or family problems or relationships with supervisors and peers, and/or an increase in individual responsibilities. You must continually evaluate your ability to perform as a crewmember.

1.6.5. You also need to be aware of the many physiological factors affecting aviation safety. Hyperventilation, hypoxia, and fatigue are just a few of the factors that must be understood to be able to prevent their occurrence or minimize their effects.

1.6.6. Spatial disorientation affects a pilot's ability to determine the actual attitude of the aircraft. An improper instrument cross-check, failure to trust the instruments, lack of outside visual references, rapid head movement, and/or abrupt control input movements can cause spatial disorientation. Vertigo is one of the most common forms of spatial disorientation. The most dangerous byproduct of vertigo is the tendency for a pilot to believe his or her body (flying by the seat-of-the-pants) instead of the instruments. As difficult as it is to do, you must say to yourself, "The instruments are correct; fly the instruments and ignore the body sensations." In addition, tell the other crewmember when you are experiencing spatial disorientation. If the other crewmember is able, do not hesitate to transfer aircraft control to him or her (paragraph **1.7.**).

1.7. Transfer of Aircraft Control. An important requirement during any flight (especially flight training) is a clear understanding of who has control of the aircraft. When piloting the aircraft, remain on the controls until you are sure the other pilot has accepted control.

1.7.1. **Hand Flying.** To transfer control, the PF will inform the PNF by stating, "Copilot (Pilot), you have the aircraft." When ready to assume control, the PNF will say, "Roger, copilot (pilot) has the aircraft." The PF will not relinquish control until he or she clearly hears the verbal response from the other pilot and sees that the other pilot has physically taken control. During time-critical situations, it is imperative that the PF relinquish control immediately on the aircraft commander's verbal command so as not to obstruct any flight control or throttle movements.

1.7.2. **Autopilot.** When the autopilot is engaged, the procedure specified in paragraph **1.7.1.** will be used. Ensure a positive verbal transfer, an understanding of who has control of the aircraft, and which flight director is controlling the autopilot. However, there is no requirement to physically take control of the yoke and throttles.

1.8. Seat Swap. On dual flights, the exchange of seats may be performed in flight or on the ground in accordance with AFI 11-2T-1, Volume 3.

1.8.1. **In Flight.** During a noncritical phase of flight, the IP will take control of the aircraft. The pilot in the jumpseat will unstrap and move the seat out of the center position. The other pilot will unstrap and move out of the pilot or copilot seat. The original pilot will now become the jumpseat pilot. The original jumpseat pilot will take the new position in the pilot or copilot seat.

1.8.2. **On the Ground.** Taxi to an area that is clear of obstructions or traffic. Unfamiliar aircrew should reference the local airfield diagram contained in Flight Information Publications (FLIP). A

pilot may request "progressive" taxi instructions from ground control at a strange or unfamiliar field. The aircrew will normally accomplish the Full-Stop, Taxi-Back Checklist. With engines in idle, the pilot will apply the parking brake and verify that the brakes are holding. The crew will swap seats. (If only two pilots are on board, a seat swap will not be conducted with the engines running.) When the exchange has been completed, the crew will ready the aircraft for takeoff, using the appropriate checklists (normally the Full-Stop, Taxi-Back Checklist and the Lineup Checklist).

1.9. Preflight Briefing. All aircrews will be briefed on their specific duties and responsibilities. The appropriate briefing guide will be used to brief each flight or event. (See AFI 11-2T-1, Volume 3, for mission, low-level, airdrop, and formation and air refueling briefing guides.) Crewmembers may expand briefing guides as necessary.

1.10. Preflight. The aircraft commander will ensure complete and proper exterior and interior preflight inspections are performed on the aircraft before each flight in accordance with the appropriate checklist.

1.11. Instrument Cockpit Check. This check is different from other aircraft because the T-1A instrument systems self-test during warmup. Also, by following the checklists, all necessary instrument cockpit checks will be completed. (This eliminates the requirement for performing all the steps of the instrument cockpit check as outlined in AFMAN 11-217, Volume 1, *Instrument Flight Procedures*.) However, you will still need to check the heading system for the correct direction of turns during taxi and the proper heading displayed during runway alignment.

1.12. Ground Operations:

1.12.1. For the purpose of checklist operations, the pilot in the left seat is the pilot and the pilot in the right seat is the copilot. The pilot in the jumpseat will perform certain copilot duties as part of the crew coordination process. All checklist items will be read, and the individual responsible for each item must reply with the appropriate response.

1.12.2. During ground operations prior to taxi, the ground crew must be included in all coordinated actions as directed by TO 1T-1A-1 (T-1 flight manual) checklists. The engine-start brief to the aircrew and ground crew should include (at a minimum) normal procedures (type and sequence of start) and emergency procedures (callouts and hand signals for any start malfunctions and egress procedures). At other than the home station, the ground crew should be prebriefed on the engine-start procedures (normal and emergency) and coordinated actions for the flap check and speed brake check.

1.13. Ground and In-Flight Checks. Good checklist discipline and crew coordination are integral parts of military flying. It is important to develop good habit patterns, which can be carried over to more complex aircraft. If you have any doubt about the condition, setting, or operation necessary to perform a checklist item, ask the opinion of the aircraft commander or other qualified personnel. During critical phases of flight, direct reference to the checklist is not required. Do not perform after-landing checks until the aircraft is clear of the active runway.

1.14. Taxiing:

1.14.1. Stay alert and do not allow flight deck activity to distract you during taxiing. Do not accomplish any checklist while in a congested area.

1.14.2. Taxiing is accomplished with nosewheel steering, brakes, differential power, or a combination of all three. The nosewheel will steer in direct proportion to the amount of rudder pedal movement. Brakes may be used at the same time to decrease the turn radius. Do not ride the brakes while taxiing.

1.14.3. Taxi clearance requirements may be modified at your home field if established taxi lines are marked and obstructions are either permanent or parked on established parking spot lines. Always taxi in the center of marked taxiways unless directed otherwise by ground control or qualified ground crew personnel.

1.15. Takeoff and Landing Data (TOLD):

1.15.1. Calculate TOLD or use approved tab data on every flight. It is imperative to know more than just the numbers and definitions; you must have a complete understanding of the practical application of these computations.

1.15.2. When computing TOLD before a mission, remember that forecast temperature, wind direction and velocity, and pressure altitude may not be the same when you arrive at the runway. Other factors, such as pilot braking technique and brake, tire, and runway conditions, will also affect the computations. This discussion is not meant to de-emphasize the importance of TOLD, but to point out that knowledge of what the numbers mean will help you make decisions during an emergency on takeoff or landing.

1.15.3. Before takeoff, the PNF will set the airspeed marker on S_1 (decision speed), the PF will set V_{co} (climbout speed), and both will memorize V_{rot} (rotation speed) if different than S_1.

1.16. Area Orientation. Good preflight planning and chart study make area orientation much easier, especially if visibility is limited by weather conditions. Cross-check your chart and area landmarks for visual flight rules (VFR) recoveries and area orientation. Additionally, use the aircraft's navigation equipment in case of restricted visibility or unfamiliar area assignment.

1.17. Clearing:

1.17.1. The pilot is ultimately responsible for establishing good methods of clearing with the crew. The T-1A methods of clearing are similar to other crew-type aircraft and require crew coordination. With the side-by-side seating arrangement of the T-1A, the PNF has limited visibility out the PF's side of the aircraft, just as the PF has limited visibility out the PNF's side. This lack of visibility will require the PF to clear not only by looking out of the front and his or her side, but by directing the PNF to clear out his or her side also. The PF will direct the crew on how to clear and challenge, "clear left (right)," as appropriate.

1.17.2. Both pilots should listen to and cross-check the traffic alert and collision avoidance system (TCAS) throughout the flight. They should remember, however, that TCAS cannot depict an aircraft if its transponder is in standby or not functioning properly. Therefore, because TCAS will not be able to display all air traffic, the crew is still responsible for clearing visually and on the radios for other aircraft.

1.17.3. Aircrews operating in visual meteorological conditions (VMC) must maintain constant vigilance for other aircraft. Radar controllers and military operating areas (MOA) do not relieve the pilot of the responsibility to clear. Even an instrument flight rules (IFR) clearance does not guarantee sepa-

ration from all other aircraft. As the PF, ensure the crew continues to help clear the airspace visually, on the radio, and with the use of TCAS.

1.17.4. While performing area work, the PF will clear the anticipated flightpath before entering the next maneuver. Informing the crew of the intended maneuver and directing them to clear in that direction will raise their level of situational awareness and allow them to help clear the intended flightpath.

1.17.5. The crew should:

1.17.5.1. Stay clear of other locally based aircraft by being aware of areas of possible conflict and avoiding them.

1.17.5.2. Know the location of the departure and recovery routes, flying areas, and traffic patterns and place increased emphasis on clearing in these areas.

1.17.5.3. Listen for radio transmissions to get a feel for traffic location in the vicinity. (The more the crew knows about the immediate flying environment, the better they will be able to detect and avoid other aircraft.)

1.18. Radio Procedures:

1.18.1. Most radio procedures are similar to those learned in other aircraft. Local procedures, in-flight guide (IFG), and FLIP contain specific procedures for different circumstances. In the T-1A, crew coordination plays an important role in radio conduct. It is normally the PF's responsibility to direct all radio activity and the PNF's or jumpseat pilot's responsibility to select the radio, set the frequencies, and do the transmitting. Remember, the T-1A has more than one radio so it is important to select the proper unit and set the correct frequency.

1.18.2. The ultrahigh frequency (UHF) radio is used primarily for military airfields; the very high frequency (VHF) radio is used primarily for civilian fields. Radar controllers can talk to you on either radio. MOA radio operations will normally be conducted on UHF.

Chapter 2

TAKEOFF, CLIMB, AND LEVELOFF

2.1. Preflight. Before calling for takeoff clearance, ensure you and the crew are prepared for takeoff, all applicable procedures and checklist items have been completed, and TOLD has been computed and posted. Because the T-1A takeoff requires crew coordination, ensure each crewmember understands his or her responsibilities during and after takeoff. Before taking the runway for takeoff, look around to make sure you are clear of all other aircraft and final is clear.

2.2. Takeoff Options:

2.2.1. **Static Takeoff:**

2.2.1.1. Use the brakes to hold your position during engine runup. Perform an outside visual scan prior to and during runup to ensure the area is clear and you are not creeping forward or pulling to one side.

2.2.1.2. Set the throttles to approximately 80 percent N_1.

2.2.1.3. Verbally confirm with the PNF for proper flight deck and engine instruments indications; for example, "Engines and flight instruments checked pilot," "Checked copilot."

2.2.1.4. Release both brake pedals at the same time to prevent swerving off the runway heading at the beginning of the takeoff roll.

2.2.1.5. Maintain directional control with nosewheel steering and flight controls (yoke and rudder) as required. Avoid differential braking because it increases the takeoff distance. The PF must concentrate on outside references with cross-checks inside the cockpit.

2.2.1.6. Increase the power toward the target takeoff rated thrust (TRT) N_1 setting and call, "Set power." The PNF will adjust the N_1 fan speed to the computed TRT before reaching 60 knots indicated airspeed (KIAS). The PNF should continue to guard the throttles during the takeoff.

2.2.1.7. Passing 80 KIAS, the PNF will announce "80 knots." The engine instruments should be in the green, indicating performance is within the normal parameters. The PF should cross-check the airspeed indicator and acknowledge the "80 knots" call.

2.2.1.8. At S_1 the PNF will announce "S_1," and the PF will place both hands on the yoke in preparation to rotate the aircraft to the takeoff attitude. The PNF will continue to monitor the engine instruments with quick outside visual checks. At V_{rot}, the PNF will announce, "rotate," and the PF will apply sufficient backpressure to rotate the aircraft to a 13- to 15-degree pitch attitude for liftoff (**Figure 2.1.**). In many situations, S_1 and V_{rot} will occur simultaneously. When that happens, the PNF will announce "S_1, rotate."

Figure 2.1. Takeoff Rotation.

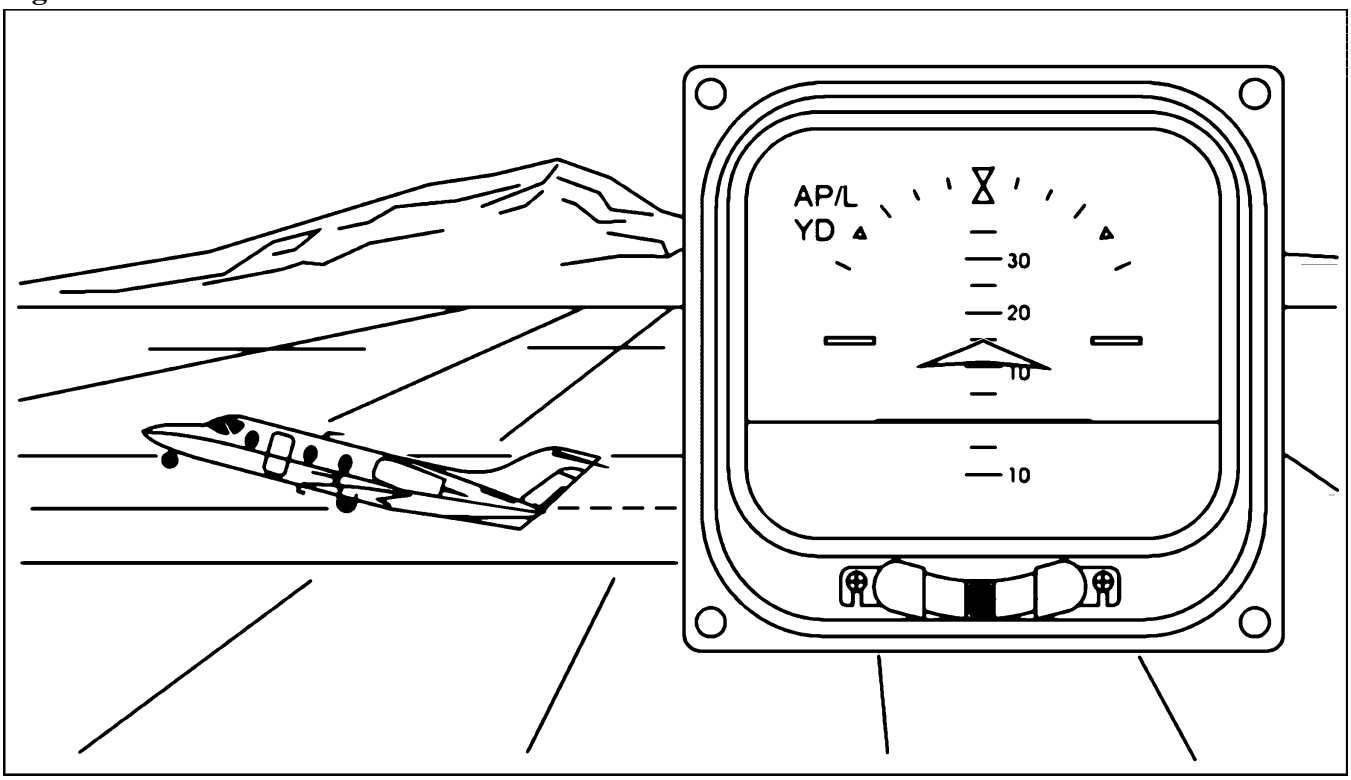

2.2.1.9. Use caution during gusty wind conditions. Rapidly changing wind direction and velocity require timely control inputs to ensure aircraft directional control.

2.2.2. **Rolling Takeoff:**

2.2.2.1. Rolling takeoffs are commonly used at airfields with heavy traffic to expedite traffic flow and reduce runway congestion.

2.2.2.2. Compared to static takeoff performance, the rolling takeoff performance difference is negligible. (It also has negligible effect on TOLD.) However, takeoff roll and critical field length may increase slightly.

2.2.2.3. Before taking the active runway, the crew will accomplish all necessary checks. A rolling takeoff and a static takeoff should be approached identically. Taxi onto the runway in a normal manner. Once proper runway alignment is attained, the PF will smoothly advance the throttles toward TRT and perform an engine instrument check. Do not be in a rush to add power. As a technique, increase power from idle to TRT in approximately 1 to 3 seconds to avoid any chance of compressor stall or overspeed. The crew will then accomplish the remaining takeoff procedures (paragraphs **2.2.1.5.** through **2.2.1.9.**).

2.2.3. **Abort Considerations:**

2.2.3.1. The most important abort consideration is to not delay making the decision to abort. Before leaving the briefing room, the pilot should have made the decision about when to abort a takeoff.

2.2.3.2. Aircraft weight and airspeed are important factors in an abort situation. The heavier the aircraft and the faster the airspeed, the earlier the abort decision must be made because it will take

longer to stop the aircraft. On touch-and-go landings, keep in mind the airspeed and touchdown point on the runway. If you are long and fast, the distance available for an abort will be decreased.

2.2.3.3. Another important abort consideration is the condition of the runway. Any condition other than completely dry will increase the distance required to stop the aircraft. Plan ahead. That is, before taking the runway for takeoff, reevaluate your preplanned abort decisions and update them to match the current conditions. Runway conditions dictate the effectiveness of braking. The better the runway conditions, the better the braking action will be if an abort is necessary. The anti-skid system allows you to achieve optimal braking more easily for the given runway conditions. During an actual abort with minimal runway remaining, depress the brake pedals until the anti-skid cycles.

2.3. Climb:

2.3.1. After-Takeoff Climb:

2.3.1.1. When a positive rate of climb is established, the PF will signal for gear retraction by making a "gear up" call. The PNF will confirm positive climb and safely airborne, repeat "gear up," and then raise the gear handle. Ensure gear indicators reflect the UP position. After the gear is retracted, the PNF will state, "gear is up." All crewmembers will visually verify the gear position on the landing gear indicators. ***NOTE:*** A positive rate of climb is established when the vertical speed indicator (VSI) and altimeter or outside references (when available) show a climb.

2.3.1.2. Passing 400 feet (1,500 feet if required) above ground level (AGL) with a minimum airspeed of V_{co} +10 KIAS, the PF will call "Flaps up, After-Takeoff (Pattern) Checklist." The PNF will repeat "flaps up," and raises the flaps while monitoring for any flap asymmetry during retraction. After the flaps are up, the PNF will state, "flaps are up." All crewmembers will visually verify the flap position on the flap indicator. Following flap retraction, the PF will decrease pitch to 10 degrees nose up and accelerate to climb airspeed.

2.3.2. Climb Power:

2.3.2.1. The PF will set approximate climb power. If directed, the PNF will fine-tune the throttles to climb power, normally maximum continuous thrust (MCT). Readjust N_1 power to MCT approximately every 5,000 feet during the climb.

2.3.2.2. The PF will accelerate to the desired climb schedule airspeed after retracting the flaps. Use 220 KIAS for two-engine rate climbs and 250 KIAS for two-engine range climbs (170 KIAS for one engine climb). Maintain the climb schedule with appropriate pitch adjustments and power adjustments for each 5,000 feet.

2.4. Leveloff:

2.4.1. Leveloff lead points are used to provide a smooth, continuous pitch change to the level-flight attitude. Use 10 percent of the VSI for moderate climb rates. For steep climb rates, cut the pitch in half 1,000 feet before leveloff altitude and then use 10 percent of the VSI to complete the leveloff.

2.4.2. Leave power set at MCT to accelerate to the desired cruise airspeed. Then adjust the power as required.

Chapter 3

TRANSITION

3.1. Basic Maneuvers:

3.1.1. **Basic Aircraft Control.** Normal cruise has no unique or unusual flying characteristics for jet transport aircraft. Aircraft control forces for a given indicated airspeed are not affected by altitude. The only noticeable effect of altitude on flying qualities is a decrease in dutch roll damping due to Mach effects. Above flight level (FL) 280, dutch roll damping decreases, requiring augmented yaw dampening.

3.1.2. **Straight and Level.** As speed increases at a constant altitude, the aircraft control forces increase and become heavy. Therefore, while performing any flight operation or maneuver with this aircraft, always keep it in trim.

3.1.3. **Change of Airspeed.** When the aircraft is configured, its attitude is sensitive, particularly in the roll axis. During low speed flight when power is changed from idle to go-around N_1, there is an initial nose-down tendency due to the high-mounted engines. This nose-down tendency must be counteracted. Trim should be used as power is applied to assist in maintaining desired attitude.

3.2. Turns:

3.2.1. **Normal Turns.** The T-1A control system incorporates features that provide feel and aircraft response common to operational ATB aircraft. The increased back pressure used to control pitch requires additional power to maintain airspeed. The amount of additional power required is approximately proportional to the angle of bank (AOB). The correct amount of additional power you must add to make consistent AOB turns should remain constant regardless of the degrees of turn. To resume level flight while rolling out of the turn, decrease power by the same amount it was increased at the beginning of the turn to maintain airspeed.

3.2.1.1. **AOB.** Use shallow bank turns, 30 degrees AOB or less (**Figure 3.1.**), for heading changes that are less than 30 degrees. When the turn exceeds 30 degrees of heading change, use up to 30 degrees AOB. For steep bank turns, 45 degrees is the maximum AOB (**Figure 3.2.**). The basic differences between normal, shallow bank, and steep bank turns are the amount of back pressure required to maintain altitude and the amount of power required to maintain airspeed and level flight.

Figure 3.1. Thirty-Degree (30º) AOB Visual Reference.

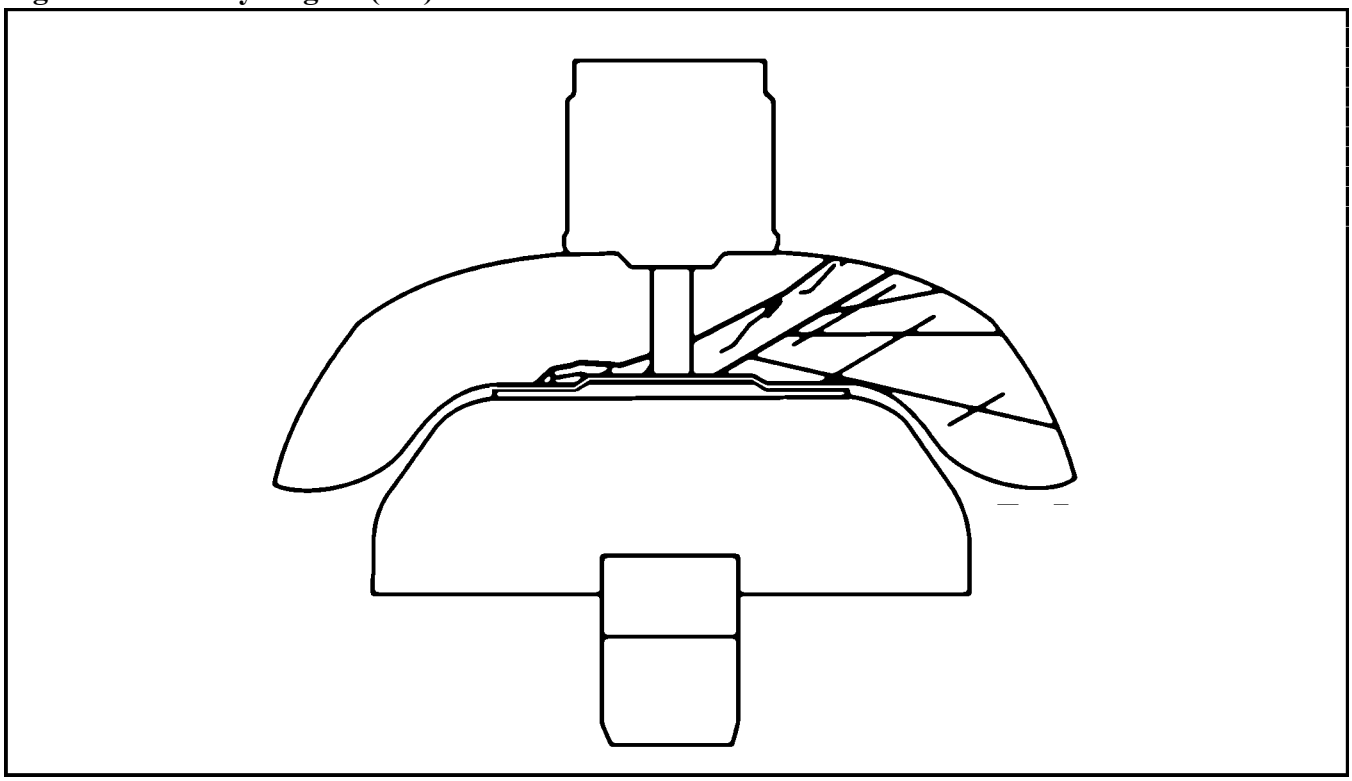

Figure 3.2. Forty-Five-Degree (45º) AOB Visual Reference.

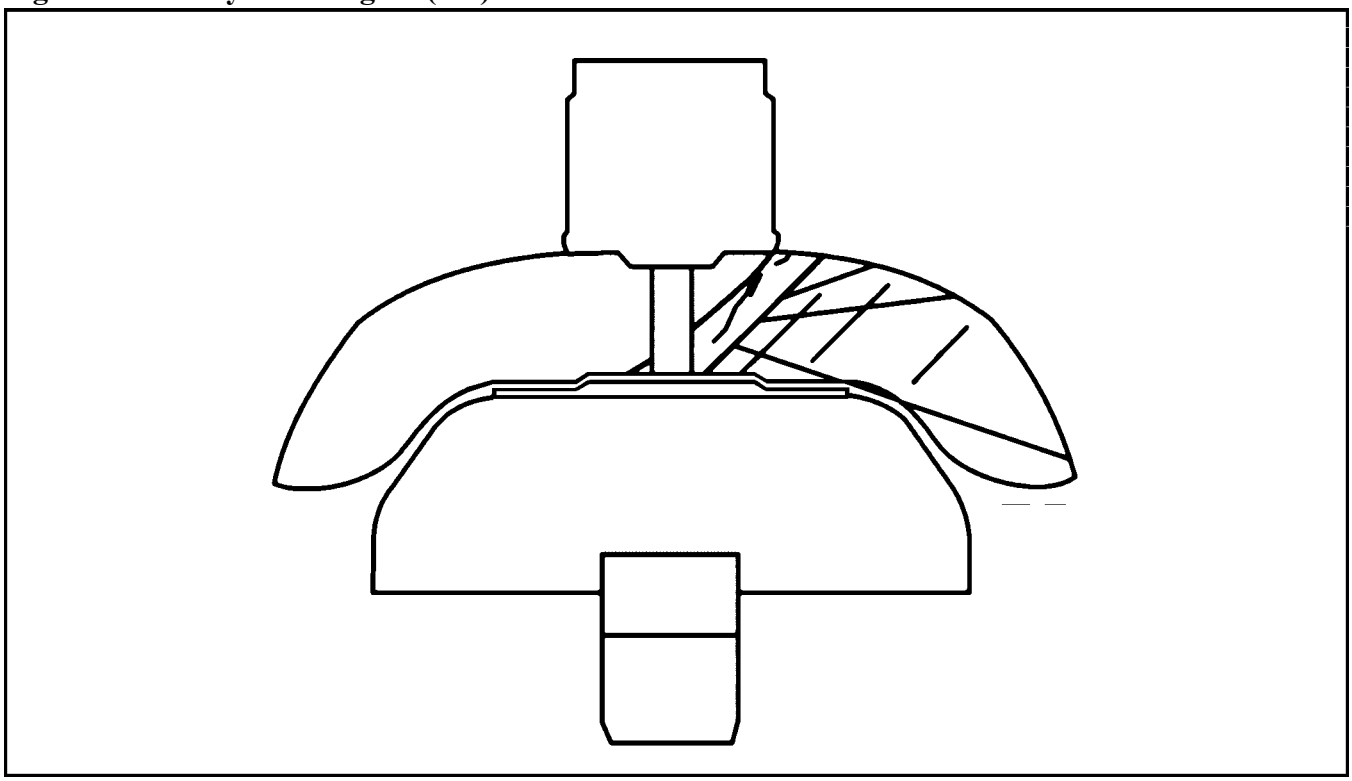

3.2.1.2. **Turning Procedures.** Simultaneously apply pressure to spoilers and rudder in the direction of the desired turn. The rate of roll is determined by the amount of control pressure applied and the rate of flight control surface displacement. Control the turn AOB with visual sight pictures using the angular relationships of the horizon in the windscreen or, in instrument meteorological conditions (IMC), the AOB on the electronic attitude direction indicator (EADI).

3.2.1.3. **Pitch and Altitude.** Increased nose-up pitch is required to compensate for lift lost during turns. Only a minimum amount of increased nose-up pitch is required when you make shallow AOB turns; greater amounts are needed as you increase the AOB. Use the visual horizon or EADI (in IMC) references to control pitch and maintain altitude. Correct inadvertent nose-low attitudes by reducing the AOB with coordinated spoiler and rudder pressure while simultaneously correcting pitch with control column back pressure.

3.2.1.4. **Rollout Lead Point.** Rollout lead point considerations include the amount of AOB used to make the turn and the rollout rate. The rollout lead point for a 30-degree AOB turn is approximately 5 degrees; the rollout lead point for a 45-degree AOB turn is approximately 10 degrees.

3.2.2. **Steep Turns.** Occasionally, it will be necessary to use steeper AOB than usual to make turns, so it is necessary to understand and practice performance parameters, power requirements, and acceleration load considerations associated with steep AOB turns.

3.2.2.1. **Turning.** Roll into steep AOB turns with a steady increase of bank angle. Stop the rolling movement when you attain a 45-degree AOB indication visually or on the EADI. Maintain a constant 45-degree AOB during the turn. Plan the lead point to roll out on a predetermined heading. Roll out of the turn at the same rate you used to initially roll in to the turn. Normally accomplish steep turns at speeds of 160, 200, and 230 KIAS.

3.2.2.2. **Power.** Power settings will vary with altitude and gross weight.

3.3. Flight Characteristics Demonstrations:

3.3.1. Asymmetric Thrust Demonstration:

3.3.1.1. Asymmetric thrust is a major cause of loss of control in ATB aircraft experiencing engine failure or loss of thrust at low airspeeds. This demonstration will show the significance of asymmetric thrust and effectiveness of control surfaces at both low and high speeds.

3.3.1.2. Demonstration limit parameters will be in accordance with AFI 11-2T-1, Volume 3. Perform the procedures twice, beginning once at 220 KIAS and then at 150 KIAS. Notice the effect of decreased airspeed on aircraft controllability. At lower airspeeds, the aircraft fuselage no longer streamlines with the relative wind and control effectiveness is diminished, necessitating greater control deflection. Airspeed is a powerful aid in combating the effects of asymmetric thrust.

3.3.1.3. Ensure the aircraft is headed toward an identifiable landmark to enable the crew to discern the effect of asymmetric thrust. While maintaining level flight, establish 220 KIAS and reduce power on both engines to idle. Then smoothly advance one throttle to MCT. Notice the effect of the asymmetric thrust on the nose track with respect to the landmark or horizon. The aircraft will yaw away from the operative engine, resulting in a rolling tendency in the same direction.

3.3.1.4. After noting the effect of asymmetric thrust on the aircraft and ground track, maintain aircraft control by using rudder opposite the direction of yaw and a bank of 5 degrees into the opera-

tive engine. The rudder counteracts the yaw and the bank reduces the slide slip angle, which decreases drag and improves directional control. Recover by smoothly matching the throttles as the wings are brought level and rudder pressure is reduced.

3.3.1.5. Repeat the demonstration at 150 KIAS. Notice the difference between the aircraft response and control inputs required to counteract the asymmetrical thrust at the two airspeeds.

3.3.2. **Yaw Damper (YD) Failure Demonstration:**

3.3.2.1. The YD will use the autopilot rudder servo to provide yaw dampening and control the adverse effects of dutch roll. You need to know how to handle the aircraft in case the autopilot YD becomes inoperative.

3.3.2.2. The YD annunciators are on the EADI. A green YD annunciation illuminates when the YD is engaged. A yellow YD annunciation illuminates when the YD is disengaged and flashes for 5 seconds before disappearing from view.

3.3.2.3. When the YD is disengaged or inoperative, you will observe mild but persistent dutch roll when you displace the aircraft from straight-and-level flight. The purpose of the YD failure demonstration is to show you this effect.

3.3.2.4. Demonstration limit parameters will be in accordance with AFI 11-2T-1, Volume 3. Perform the procedures separately so you can compare the aircraft reactions.

3.3.2.5. With the YD disengaged, apply sufficient rudder deflection (either to the left or right) to displace the aircraft from straight-and-level flight. Then rapidly release the rudder, allowing it to return to neutral. Note the oscillations without the yaw damper. Ensure oscillations are minimized before engaging the YD. Engage the YD. Reapply sufficient rudder deflection, rapidly release the rudder, and observe minimal oscillations.

3.3.3. **Flap Retraction Demonstration:**

3.3.3.1. This demonstration will illustrate the effect of the flaps on lift and drag. In the T-1A, flaps are not only used to increase lift for the takeoff and landing phases, but also for drag.

3.3.3.2. Demonstration limit parameters will be in accordance with AFI 11-2T-1, Volume 3. If approach-to-stall indications are encountered any time during this demonstration, perform the appropriate recovery procedures.

3.3.3.3. Configure the aircraft with gear, flaps to 30 degrees, and slow to V_{app} (approach speed) minus 5 knots. It is usually convenient to perform this demonstration immediately following slow-flight practice. Once stabilized, leave the power set and retract the flaps to the 10-degree setting while maintaining level flight. By observing the angle of attack (AOA) and airspeed indicators, notice a slight loss in lift and a rapid increase in airspeed. The increase in airspeed will quickly negate the loss in lift, making it difficult to observe. Return the flaps to 30 degrees and reestablish slow-flight airspeed. Again leaving the power set, retract the flaps to full up. Again note the change in airspeed and loss of lift, which is more apparent than when the flaps were raised to 10 degrees. Recover from the demonstration by performing the slow-flight recovery procedures.

3.4. Traffic Pattern Stalls and Approach-to-Stall Parameters:

3.4.1. Before starting these maneuvers, set the YD to OFF and AOA to 1.3, set the V_{app} on the airspeed indicator, calculate and set MCT on N_1 indicator, and clear the area.

3.4.2. You must be able to recognize the approach-to-stall indications and the procedures to return the aircraft to normal flight. Traffic pattern stall and approach-to-stall training emphasizes recognition of approaching stall conditions as well as procedures used to recover the aircraft to normal flight.

3.4.3. Actual traffic pattern stall or approach-to-stall situations frequently result from improper aircraft handling, maneuvering, or configuration. The T-1A aircraft stall warning system--which provides indications of approach-to-stall or stalled conditions--incorporates control column stick shakers, an AOA indicator, and shroud panel stall warning annunciators that receive signal information from the AOA computers.

3.4.4. The T-1A exhibits handling characteristics of moderate airframe buffet, which does not increase appreciably at full stall, and mild rolling tendencies, which also provide warnings of an approach-to-stall condition.

3.4.5. Initiate recovery as soon as you recognize any approach-to-stall indication—normally the stick shaker. To properly recover from an approach-to-stall condition, simultaneously relax control column back pressure; roll wings level; increase engine thrust; and, when safely climbing away from the ground, retract the landing gear. When performing stall recoveries at 30-degree flaps after advancing power toward go-around N_1 (use MCT when practicing), the PF will call for "flaps 10 degrees, set power." Raise the flaps to 0 degrees at a minimum airspeed of V_{ref} (reference speed) plus 20 knots. Remember, in an actual stall, do not hesitate to "firewall" the engines to avoid ground impact.

3.4.6. When doing 10- or 0-degree flap stall recoveries, leave the flaps at their current setting. If cleaning up the aircraft on the last stall series, complete the stall recovery by raising the gear once a positive rate of climb is established.

3.4.7. Parameters for performing practice traffic pattern stall maneuvers include using any desired flap position and accomplishing the maneuvers in any desired sequence.

3.4.8. When you unintentionally encounter actual stall or approach-to-stall conditions in the traffic pattern, disregard normal traffic pattern ground tracks during your recovery actions. This is a situation where your first priority is to regain control of the aircraft. When you have the aircraft under control, advise the tower of your situation and intentions.

3.5. Traffic Pattern Stalls and Approach-to-Stall Procedures:

3.5.1. Traffic Pattern Overshooting Final Turn Stall:

3.5.1.1. Configure for landing with gear extended and flaps set in any desired position. Reduce power to idle and establish a simulated final turn maneuver. Simulate an overshooting final turn using normal to steep AOBs (30 to 45 degrees), which may require lowering the nose and/or increasing back pressure. Continue increasing control column back pressure until you recognize an approach-to-stall indication.

3.5.1.2. Recover by simultaneously relaxing back pressure, rolling wings level, and advancing throttles to go-around N_1 power (MCT when practicing). Call for flap retraction if required. Return to level flight as soon as possible with a minimum amount of altitude loss. Normally, attempt to recover using .8 to .85 AOA (just prior to stick shaker).

3.5.2. **Traffic Pattern Undershooting Final Turn Stall:**

3.5.2.1. Establish landing configuration with landing gear extended and flaps in any desired flap position. Reduce power to idle and establish a simulated final turn maneuver. Simulate an undershooting final turn and establish a simulated descending turn to final, using a shallow AOB (10 to 20 degrees) and a pitch attitude higher than you would normally use in final turn maneuvers. Continue turning until you recognize the approach-to-stall indications.

3.5.2.2. Recovery procedures for this maneuver are the same as for the overshooting final turn stall (paragraph **3.5.2.**). However, stall airspeed is lower because of the decreased AOB. Also, recovery to level flight requires more time because the airspeed at the beginning of acceleration is less than it is in the nose-low final turn stall maneuver.

3.5.3. **Traffic Pattern Final Approach to Stall:**

3.5.3.1. Extend the landing gear and position the flaps as desired to simulate a final approach/landing configuration. Retard the throttles to idle and establish a landing flare attitude.

3.5.3.2. When you recognize the approach-to-stall indications, recover by simultaneously relaxing back pressure and advancing the throttles to go-around N_1 power (MCT when practicing). When performing a 30- or 10-degree flap approach to stall, retract or check flaps to 10 degrees. If performing at 0-degree flaps, leave flaps retracted. Return to the level-flight attitude as soon as possible, using recovery procedures already described. You may include normal go-around procedures as part of the practice recovery procedure.

3.6. Slow-Flight Parameters. You need to know the appropriate aircraft configurations for performing slow flight, proper maneuver AOA, and its altitude limitations. This is a coordinated flight exercise.

3.6.1. **Slow-Flight Configuration.** Accomplish slow-flight maneuvers with the landing gear extended until performing the slow-flight recovery. Position the flaps in the appropriate position required to perform the intended landing pattern maneuver.

3.6.2. **Slow-Flight Airspeed.** Configure the aircraft and slow to V_{app} -5 knots.

3.6.3. **Straight-and-Level Flight.** Slow the aircraft to the appropriate speed (a slightly slow indication on the AOA indicators). Use power as required to maintain airspeed and level flight. Trim as required to neutralize flight control surface pressures for slow-flight maneuvers. Control the aircraft attitude by using flight instruments and visual references and monitor level flight deviations with the altimeter.

3.6.4. **Turns.** During turns, maintain altitude and airspeed with smooth power applications. Use shallow (10 to 20 degrees) AOBs while keeping the aircraft in trim. An increased AOB results in an increased stall speed. The AOA and power required to maintain airspeed also increases as the AOB increases and decreases during a return to level flight after rollout.

3.6.5. **Slow-Flight Recovery Procedures.** Slow-flight recovery procedures demonstrate the appropriate aircraft feel for recovery from a slow-speed condition encountered in the actual traffic pattern. The recovery procedures apply to straight-and-level flight and during turns. Practice slow flight, using the following procedures:

3.6.5.1. Set up the aircraft in the landing configuration with the AOA indicator index reference set at 1.3.

3.6.5.2. Initiate stall recovery procedures when you complete the practice maneuvers. Also initiate stall recovery procedures any time you recognize an indication of the approach-to-stall condition.

3.6.5.3. Avoid abrupt control column movement to prevent entering a stalled condition and anticipate trim requirement changes resulting from increased power. Try to maintain neutral control column pressure as the airspeed increases.

3.6.5.4. Retract the landing gear and flaps to improve acceleration. Do not allow the AOA to increase above the desired slow-flight AOA during configuration changes. If accomplishing 30-degree flap slow flight, raise the flaps to 0 degrees at a minimum airspeed of V_{ref} + 20 knots.

3.6.5.5. Recover the aircraft with minimum altitude loss.

3.7. Unusual Attitudes. You must be able to recognize and confirm that an unusual attitude exists; then you must know how to recover to level flight. Exercise caution while performing practice recoveries to avoid approaching or exceeding airspeed or G limits.

3.7.1. **Parameters.** Maneuver parameters will be in accordance with AFI 11-2T-1, Volume 3. Compute an MCT and use power as required, but avoid exceeding the MCT limits.

3.7.2. **Recovery.** An unusual attitude may be a flight attitude and airspeed where aircraft control may be lost unless proper recovery action is initiated. The key to a successful recovery is early recognition of an unusual attitude. Apply the appropriate recovery procedure without delay when an unusual attitude is recognized and verified.

3.7.3. **Verification:**

3.7.3.1. Visual cues to determine an unusual attitude include comparing the aircraft attitude (pitch and AOB) with the visual horizon references and standby attitude indicator.

3.7.3.2. Excessive wind noise or the absence of normal wind noise may be a clue that an unusual attitude exists.

3.7.3.3. Oscillation between positive and negative acceleration forces indicates the aircraft is in uncoordinated flight.

3.7.3.4. Instrument cues that warn you about an unusual attitude are abnormally high or low airspeed or Mach, abnormal attitude indications on the EADI, rapidly changing flight conditions (heading, altitude, vertical speed), and related abnormal performance instrument indications.

3.7.4. **VFR Unusual Attitude Recovery Procedures:**

3.7.4.1. For a nose-high attitude recovery:

3.7.4.1.1. Assess the aircraft attitude and determine what corrections are needed to return to level-flight attitude. If the airspeed is low, add power to MCT if necessary.

3.7.4.1.2. Decrease pitch by relaxing back pressure and rolling toward the nearest horizon without exceeding 45 degrees AOB. Roll wings level when the nose reaches the horizon.

3.7.4.1.3. If airspeed is low, you may want to allow the nose to continue below the horizon to increase airspeed.

3.7.4.2. For a nose-low attitude recovery:

3.7.4.2.1. Assess the aircraft attitude and determine what attitude corrections are needed to return to level flight. Determine if an airspeed limit is a critical recovery consideration.

3.7.4.2.2. Retard the throttles to IDLE if appropriate and extend the speed brakes if necessary. Do not exceed aircraft structural and acceleration limits.

3.7.4.2.3. Use the nearest horizon reference to roll wings level and apply control column back pressure to return to level flight. Monitor the AOA during pullup to level flight to avoid entering a stalled condition.

Chapter 4

TRAFFIC PATTERNS AND LANDINGS

4.1. Visual Approach Guidance:

4.1.1. Visual Approach Slope Indicator (VASI):

4.1.1.1. **Standard.** Standard VASI lights have a 2.5- to 3-degree glide slope and a glidepath intercept point generally 750 feet beyond the runway threshold. They are normally coincidental with the instrument landing system (ILS) or precision approach radar (PAR) to that runway.

4.1.1.2. **Nonstandard.** Nonstandard VASI has a 3.5-degree glide slope and a glidepath intercept point generally 450 feet short of the runway threshold. Following the nonstandard VASI too far will result in a dragged in approach and may contribute to a landing short of the runway threshold.

4.1.2. **Considerations.** Tests show that 1,000 feet from the runway threshold is the average point where the VASI is dropped from the pilot's cross-check in preparation for a normal visual landing. Remember, the VASI is only an approach aid, and it must be used with normal references to develop pilot judgment. Also keep in mind that many landings at a specialized undergraduate pilot training (SUPT) base may be to the runway shared with the T-38, which has a nonstandard VASI.

4.1.3. **Other Guidance Systems.** Two other visual approach guidance systems may be encountered--the precision approach path indicator (PAPI), which is installed at some Air Force bases, and the Fresnel lens optical landing system (FLOLS), which is installed at most Naval and Marine Corps air stations. Civilian fields often use a limited version of the VASI system. Refer to AFMAN 11-217, Volume 1, and FLIP for complete information on these guidance systems.

4.2. Approach Speed (V_{app}):

4.2.1. V_{app} is calculated using reference speed (V_{ref}) as the baseline (**Figure 4.1.**). V_{ref} is the computed 30-flap V_{app} based on gross weight and will not exceed 118 KIAS for a 16,100-pound (lb) aircraft. Subtract 2 knots from 118 KIAS for each 500 lb reduction of weight below 16,100 lbs. Add 10 knots to V_{ref} for 10-flap or single-engine approaches and add 20 knots to V_{ref} for 0-flap approaches. For example, if your gross weight is 15,600 lbs (that is, you burned 500 lbs of fuel from 16,100 lb aircraft), 30-flap V_{app} is 116 KIAS, 10-flap or single-engine V_{app} is 126 KIAS, and the 0-flap V_{app} is 136 KIAS.

Figure 4.1. Minimum Speeds for Pattern and Landing Operations.

	Normal 30° Flaps	Circles/10° Flaps/ Single Engine	No Flaps
Approach Speed (see notes 1 to 4)	V_{ref}	V_{ref} + 10	V_{ref} + 20

NOTES:

1. If you will exceed 15° of bank, you must add 10 knots to all above speeds.
2. V_{ref} = computed final approach speed for 30° flaps based on aircraft weight.
3. Touchdown speed = V_{app} - 6 knots.
4. For gusty wind procedures, increase approach speed and touchdown speed by 50 percent of the gust, not to exceed 10 knots.

4.2.2. When maneuvering the aircraft in excess of 15 degrees AOB, you must add 10 knots to your computed $V_{app.}$ Increase approach speed and touchdown speed by 50 percent of the gust increment, not to exceed a 10-knot correction. Refer to **Figure 4.1.** for how to calculate approach speeds.

4.3. Wind Analysis:

4.3.1. Proper wind analysis is an important part of successful T-1A pattern operations. You must learn to adjust all traffic patterns to compensate for wind conditions. The tower will broadcast wind conditions, but direction and velocity may vary at pattern altitude.

4.3.2. To determine approximate wind conditions at altitude, note the drift corrections or crab required to hold known ground tracks prior to pattern entry. Also pay particular attention to other indications of wind direction, such as smoke from nearby factories, grass fires, etc. Use this information to attain adequate downwind displacement. One technique is to use twice the drift correction required prior to pattern entry for the downwind leg. For example, if 5 degrees of right drift correction or crab was required on initial, then 10 degrees of left drift correction or crab must be applied to the downwind heading.

4.3.3. Another point that requires some discussion is the effect of wind on the length of the final approach. For example, with a strong headwind you must begin the final turn earlier than you would in a no-wind condition to arrive at the same final approach point. The opposite is true for a tailwind.

4.3.4. In addition to external wind indicators, the aircraft's electronic flight instrument system (EFIS) provides two visual displays of wind information on the flight deck—one on the electronic horizontal situation indicator and another on the multifunction display. Unlike the other wind indicators, EFIS provides wind information at a pattern altitude that is often different from the surface winds.

4.4. Straight-In Pattern:

4.4.1. The VFR straight-in pattern (**Figure 4.2.**) is used when conditions require a landing with minimum maneuvering, especially emergency situations (structural damage, fuel imbalance, gear malfunctions, etc.).

Figure 4.2. VFR Straight-In Pattern.

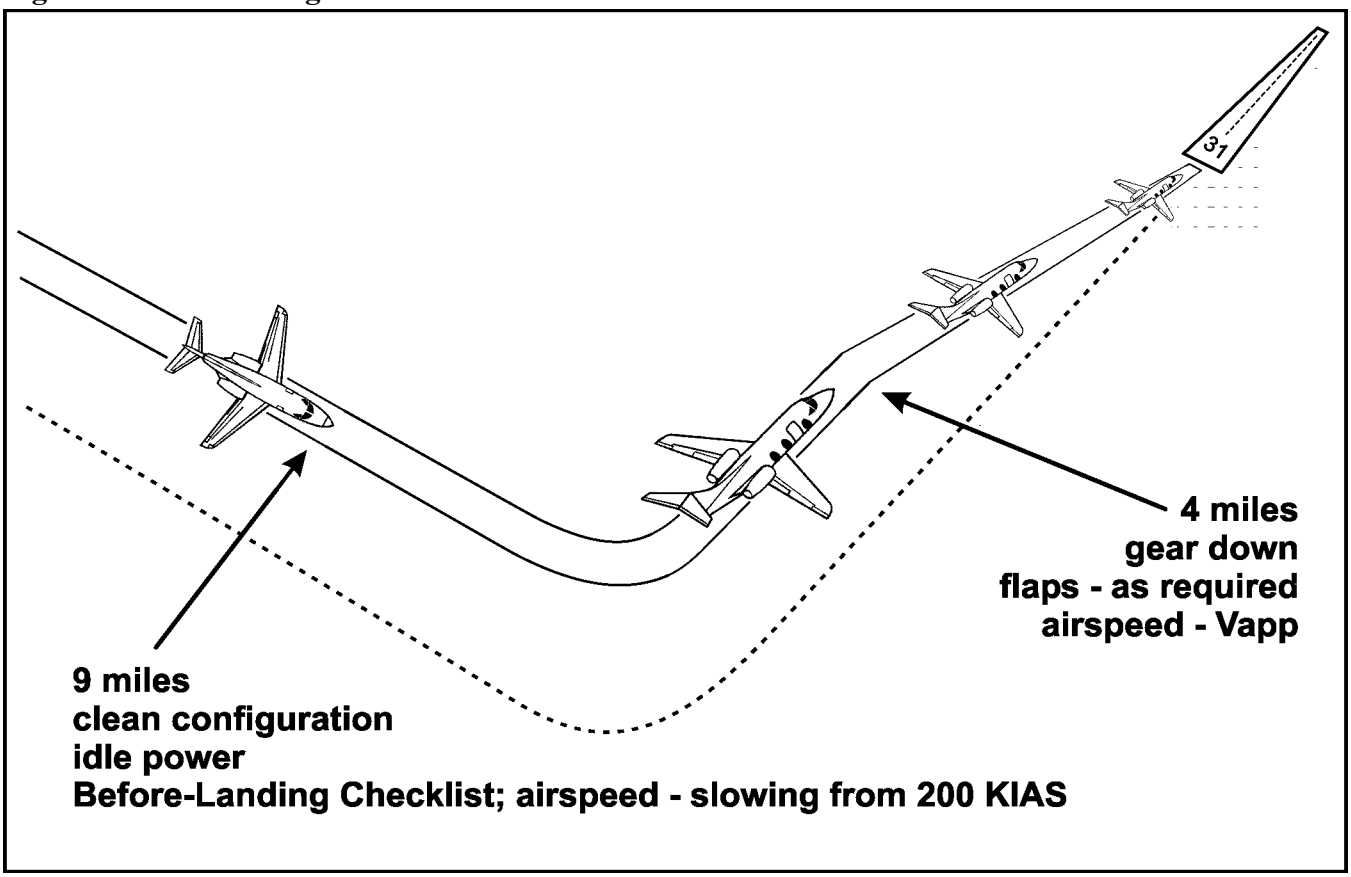

4.4.2. Request a clearance for the VFR straight-in pattern. Monitor and comply with the controller's instructions or follow local procedures regarding the pattern type, direction, status (at home field), and altitude as well as landing runway, wind, clearances, and traffic advisories.

4.4.3. Use navigational aid (NAVAID) information to maintain orientation in low visibility conditions. Useful information may be provided by the localizer, tactical air navigation (TACAN), very high frequency omnidirectional range station (VOR), and distance measuring equipment (DME) or nondirectional beacon (NDB).

4.4.4. After being cleared for a visual straight-in pattern, descend as required to achieve a normal 3-degree glidepath.

4.4.5. Fly the appropriate ground track to intercept final. Analyze the wind effect and make timely, accurate corrections.

4.4.6. Complete the Before-Landing Checklist. For normal approaches, lower flaps to 30 degrees and slow to V_{app}. For single-engine and 10-degree flap approaches, lower flaps to 10 degrees and slow to V_{app}. For no-flap approaches, maintain zero flaps and slow to V_{app} (**Figure 4.1.**).

4.4.7. Begin descent to arrive 1 mile from the runway at approximately 300 feet AGL. From this point, fly a normal final approach. Standard VASIs may be used to help determine where to begin descent on the glidepath. Disregard nonstandard VASIs when present.

4.5. Rectangular Pattern:

4.5.1. The object of the VFR rectangular pattern is to align the aircraft on final from a downwind position.

4.5.2. Request clearance for the VFR rectangular pattern. Monitor and comply with the controller's instructions or follow local procedures regarding the pattern type, direction of traffic, airfield status (at home field), pattern altitude, landing runway, wind, clearances, and traffic advisories.

4.5.3. Information normally communicated to the controlling agency and crew includes base and gear-down calls, which ensure the landing configuration is correct during the base turn. These calls may be modified, supplemented, or combined.

4.5.4. As you fly the VFR rectangular pattern, plan on squaring the corners at each end of the pattern to aid in clearing. Remember the downwind criteria for spacing (approximately 1 1/2 mile, wingtip on runway, no wind) and pattern altitude (usually 1,500 feet AGL). The minimum airspeed on downwind is based on the minimum flap maneuvering speed for the current configuration.

4.5.5. Prior to or on downwind, begin the Before-Landing Checklist or Pattern Checklist and set the approach airspeed bugs. Maintain altitude while configuring by lowering 10-degree flaps (zero flaps for no-flap), lowering the landing gear, and slowing so you have a minimum of your current flap configuration speed plus 10 KIAS at the perch. For example, when doing a 30-degree flap pattern, the aircraft should be 10 knots above the 10-degree flap speed until 30-degree flaps are selected. For 10-degree and no-flap patterns, have a minimum of 10 knots above V_{app} at the perch.

4.5.6. Adjust the pitch attitude, trim, power, and drift correction to compensate for changes in configuration and speed. Determine the final turn rollout point, using a known distance as a reference (for example, runway length or overrun length).

4.5.7. Fly the base turn to arrive at a 1- to 1 1/2-mile final. Begin your descent while on base in order to establish the proper final approach glidepath. Maintain V_{app} + 10 KIAS minimum while on base until you no longer require more than 15-degree of bank. If greater than 30 degrees AOB is required to momentarily correct for poor pattern displacement, consider increasing airspeed while cross-checking AOA. If in doubt and no traffic conflicts exist, then go around.

4.5.8. Normally, select final flap configuration prior to perch point. The base turn should place the aircraft perpendicular to final, roll wings level momentarily, clear, and begin the turn to final. See **Figure 4.1.** for V_{app} and comply with the speed for your configuration. Adjust pitch attitude to establish a proper final approach angle that passes through approximately 300 feet AGL at 1 mile from the runway. The final approach angle is the same for all patterns, although the pitch angle increases for reduced flap settings.

4.6. Tactical Pattern:

4.6.1. Make the appropriate "initial" radio call. In accordance with **Figure 4.3.**, fly the initial ground track down the runway center line, in clean configuration and at 200 KIAS and 1,500 feet AGL (or according to local procedures). Use the time on initial to ensure the inside downwind is clear of conflicting aircraft. Also use good radio-clearing techniques to avoid conflicts with aircraft flying straight-in or rectangular patterns.

Figure 4.3. Tactical Pattern.

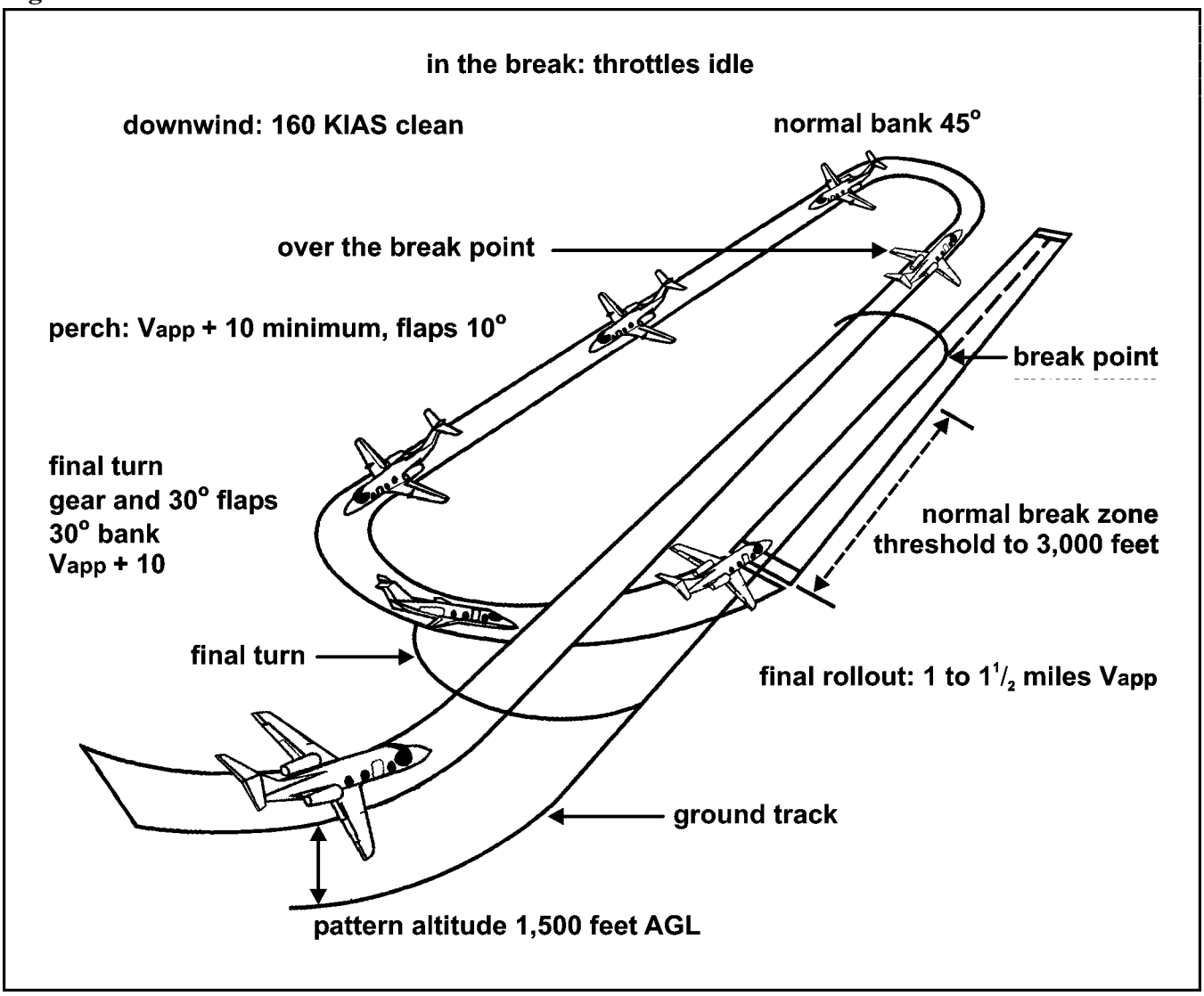

4.6.2. Initiate the Before-Landing Checklist or Pattern Checklist up to configuring the aircraft and set the airspeed bugs before the break.

4.6.3. Initiate the break between the approach end and 3,000 feet down the runway unless directed otherwise. Retard the throttles and roll into a 45-degree banked turn (for no-wind conditions). Maintain pattern altitude and adjust the bank angle to roll out at the desired inside downwind displacement. If necessary to configure during the break, establish the desired AOB prior to any configuration change. The minimum speed in the break is 160 KIAS.

4.6.4. For the inside downwind:

4.6.4.1. Roll out on the inside downwind and adjust the power as required to maintain minimum airspeed for flap setting. If necessary, establish a crab to obtain a displacement of approximately 1 to 1 1/2 miles from the runway (fuel filler cap on the runway, no wind). Maintain altitude while configuring by lowering 10-degree flaps and the landing gear. Maintain 10 KIAS above the minimum for your configuration.

4.6.4.2. Adjust the pitch attitude, trim, power, and drift correction to compensate for changes in configuration and speed. Determine the perch point and final turn rollout, using a known distance.

4.6.5. For the final turn:

4.6.5.1. Arrive at the perch point at pattern altitude at V_{app} + 10 minimum for your configuration (**Figure 4.1.**). Before beginning the final turn, visually locate other aircraft in the final turn and on final.

4.6.5.2. Select the final flap configuration prior to perch point. If greater than 30 degrees AOB is required to momentarily correct for poor pattern displacement, consider increasing airspeed while cross-checking AOA. If in doubt and no traffic conflicts exist, then go around. After checking the configuration, make the gear-down call. Adjust power as required to maintain the proper airspeed as in the rectangular pattern. Complete the rollout approximately 1 to 1 1/2 mile from the end of the runway and begin slowing to V_{app}. Adjust the pitch attitude to establish your aim point and a proper final approach angle that passes through approximately 300 feet AGL at 1 mile from the runway.

4.7. VFR Closed Pattern (Rectangular or Tactical):

4.7.1. **Clearance.** Request clearance for "closed." Once cleared, begin the closed pullup at the departure end unless specifically cleared otherwise.

4.7.2. **Procedures:**

4.7.2.1. Monitor airspeed and maintain 160 KIAS minimum during the pullup.

4.7.2.2. Adjust your bank during the turn to roll out at the desired position for either the tactical or rectangular downwind. Remember to square the rectangular pattern versus the 180-degree climbing turn for the tactical pattern.

4.7.2.3. If unable to maintain proper separation between other aircraft, advise air traffic control (ATC) or follow local procedures.

4.8. Normal Landings:

4.8.1. These landings include 30-degree flap and 10-degree flap landings. The parameters and procedures are essentially the same for both configurations. You may have to compensate for differences in airspeed and aircraft attitude when performing a 10-degree flap landing.

4.8.2. The normal landing zone for the T-1A is between 500 and 2,000 feet down the runway. (Landings accomplished from instrument approaches may result in a touchdown beyond 2,000 feet.) A threshold crossing height of 50 feet corresponds to a 1,000-foot aim point (for instrument approaches). A 20-foot threshold crossing height corresponds to an approximate 500-foot aim point (for VFR patterns). Cross the threshold at approach speed to land the aircraft at approximate touchdown speed (**Figure 4.1.**). Retard the throttles to idle when landing is assured. Determine when the landing is ensured by observing several factors including airspeed, configuration, wind, glidepath angle, and gross weight. Adjust your crosswind controls as necessary to remain on the runway center line. Increase back pressure as airspeed dissipates to maintain desired descent rate until touchdown.

4.8.3. During the flare, monitor your landing attitude and continue your crosswind controls. Make smooth control inputs, especially with 10-degree flaps. Abrupt control movements can cause ballooning or bouncing on touchdown.

4.8.4. Increase your control deflections as your airspeed bleeds off. Touchdown speed is approximately 6 KIAS less than approach speed. After the main wheels are down, gently lower the nose to the runway while you have elevator control. Once the nosewheel contacts the runway, deploy the speed brakes. Use the wheel brakes as necessary and nosewheel steering as required to maintain directional control. After clearing the runway, call for "flaps up" and the appropriate checklist.

4.8.5. If you are landing in a crosswind, hold your wing-low controls until both main gears are firmly on the runway. It is acceptable for the upwind main gear to touch down first in this situation. Be sure to neutralize the rudder pedals before the nosewheel touches the runway. Consider landing with 10-degree flaps in strong crosswinds or gusty wind conditions. This will provide a greater degree of controllability. Use caution for weather vaning tendency when neutralizing the rudder during strong crosswind landings.

4.9. No-Flap Landings:

4.9.1. When accomplishing no-flap landings, the lack of drag on the aircraft makes management of threshold speed very important. Strive to have the same landing zone as a normal landing. Techniques for dealing with the higher final approach airspeed and the lower drag differ slightly from normal landings.

4.9.2. Establish the proper aim point when wings level on final. The no-flap pitch attitude is higher than for a normal landing, the aim point will be set lower in the windscreen.

4.9.3. Establish V_{app} (**Figure 4.1.**) when intercepting final. Monitor airspeed and use small power adjustments. The power requirement is normally small due to minimal drag. Make a power-on approach, not a steep, idle-power final.

4.9.4. Landing is ensured earlier than during a normal landing because of the higher airspeed and lower drag.

4.9.5. Remember, because the stall speed is higher with flaps up, don't start the flare too high. During a no-flap landing, expect a higher pitch attitude, higher airspeed, and slower airspeed bleed off than during a normal landing.

4.9.6. The tendency to balloon or bounce the touchdown is greater when landing without flaps than with flaps. The ground effect accentuates ballooning while the higher touchdown airspeed increases the possibility of bouncing.

4.10. Single-Engine Landings:

4.10.1. Procedures and parameters for single-engine landings are essentially the same as for 10-degree flap landings, but special considerations include asymmetric thrust, rudder trim, power control, flaps, and crosswind control.

4.10.2. The primary difference between a normal landing and a single-engine landing is asymmetric thrust. If you have used rudder trim to compensate for asymmetric thrust, neutralize the rudder trim prior to touchdown. For an actual single-engine situation, power requirements on the glidepath are slightly higher than for a simulated single-engine pattern because an inoperative engine produces

more drag than an operating engine. Therefore, throttle movement is greater, and you have to adjust the pressure on the rudder pedal each time you move the throttle. The magnitude of asymmetric thrust is not as great during a simulated single-engine approach because the idling engine continues to produce thrust. ***NOTE:*** Avoid getting low and slow on final because it may be impossible to recover when one engine is inoperative.

4.10.3. Do not select 30-degree flaps unless the landing distance for 10-degree flaps exceeds runway available. If you select 30-degree flaps, do so not later than 300 feet AGL because of the large trim changes that occur. After lowering the flaps, slow to V_{app} and follow the parameters and procedures for performing a 30-degree flap landing. Remember, do not attempt a single-engine go-around after selecting the flaps to 30 degrees.

4.10.4. Charted performance assumes the throttle is brought to idle at 50 feet. However, with flaps set to 10 degrees, you may need to retard the throttle earlier than with 30-degree flaps. Once you retard the throttle to idle, asymmetric thrust becomes negligible and the touchdown and rollout are the same as for normal landings.

4.11. Touch-and-Go Landings:

4.11.1. For touch-and-go landings, the parameters and procedures for the type of approach and landing being performed do not change until after touchdown. Immediately after the nosewheel touches down, the PF will call, "flaps 10 degrees." The PNF will set or confirm, "flaps 10 degrees" and reset the stabilizer trim for takeoff. (***NOTE:*** If performing a no-flap touch and go, leave flaps at 0 degrees.) If the trim is not set correctly, yoke forces will become too light or too heavy for a safe takeoff.

4.11.2. The PF will move the throttles to an approximately straight-up position while the PNF resets the flaps and trim. Advancing the throttles will minimize the loss of airspeed and allow the engines to equalize at a higher rpm, which will minimize the possibility of asymmetric thrust. The PNF will call "throttles" after confirming the flaps and trim are set and the power is stable. The PF will advance the throttles to approximate go-around N_1 and call "set power" while the PNF monitors and adjusts the N_1 to ensure go-around N_1 is not exceeded.

4.11.3. When reaching a minimum of V_{app}, the PNF will call "rotate." At rotation, the PF will continue with normal takeoff procedures by raising the nose 13 to 15 degrees and accomplish appropriate checklists. The PNF will call when the checklist is complete. If multiple touch-and-go landings are being conducted, the crew will recompute V_{app} for each 500-pound change in weight.

4.12. Go-Around:

4.12.1. **General:**

4.12.1.1. Do not delay your decision to go around. Apply power and announce to the crew, "going around." Turbofan engines take a few seconds to spool up to go-around N_1.

4.12.1.2. If touchdown is imminent, continue to fly the aircraft to touchdown and complete the go-around procedures. Do not try to hold the aircraft off the runway in a nose-high attitude. "Firewall" the throttles if necessary to avoid ground impact.

4.12.1.3. Once beginning a go-around, don't change your mind and try to full stop.

4.12.1.4. Don't forget to retrim. Remember that a large trim change occurs when the throttles are advanced to go-around N_1 and the gear and flaps are retracted.

4.12.1.5. If you must clear the runway to observe traffic, wait until you have achieved a safe altitude and airspeed. Use shallow turns in the clearing maneuver.

4.12.2. **Normal Go-Around.** The PF will call, "going around" and raise the nose 13 to 15 degrees nose high to achieve a positive rate of climb, being careful to not let airspeed fall below final approach airspeed. The PF will set approximate go-around N_1 and call for "flaps 10 degrees, set power." The PNF will set or confirm the flaps at 10 degrees while adjusting power not to exceed go-around N_1. (***NOTE:*** If performing a no-flap go-around, leave the flaps at 0 degrees.) The PF will then call "gear up" after a positive rate of climb is established. The PF will call for flaps up at a minimum of 400 feet AGL and V_{ref} + 20 KIAS.

4.12.3. **Practice Single-Engine Go-Around:**

4.12.3.1. The PF will call "going around" and raise the nose to approximately 10 degrees nose high to achieve a positive rate of climb, being careful to not let airspeed fall below final approach airspeed. The PF will set approximate go-around N_1, and call for "flaps 10 degrees, set power." The PNF will confirm the flaps at 10 degrees while adjusting power not to exceed go-around N_1. The PF will then call "gear up" after a positive rate of climb is established. The PF will call for flaps up at a minimum of 400 feet AGL and V_{ref}+20 KIAS.

4.12.3.2. If desired, continue climb at V_{ac} (V_{ref}+22) to 2,200 feet traffic pattern altitude or obstacle clearance altitude. (V_{ac} equates to 140 KIAS at maximum takeoff gross weight.) Use a combination of rudder and bank angle to maintain directional control. Aircrews will brief actions in the event of an unplanned go-around.

4.13. Pattern and Landing Irregularities:

4.13.1. **Excessive Sink:**

4.13.1.1. This situation is most likely to occur during the final turn and final approach, but it can occur at any position in the traffic pattern. If allowed to continue, an excessive sink rate can develop from which a safe recovery may not be possible.

4.13.1.2. An excessive sink rate is not always associated with a slow airspeed or AOA indication and extreme nose-low or nose-high pitch attitude. For example, it can occur with a fast final approach airspeed and a lower-than-normal pitch attitude. This is a situation that can develop when flying or correcting from a steep final approach. Power response may not be sufficient to effect a safe recovery before touchdown. When you note an excessive sink rate in the pattern, the proper action is to execute a stall recovery, disregarding published ground tracks.

4.13.2. **Balloon and Bounce:**

4.13.2.1. A balloon or bounce on landing is usually the result of performing a poor flare for touchdown. If the deviation is minor, continue the landing. Initiate a go-around before it becomes unsafe to land.

4.13.2.2. A balloon is caused by overrotation in the flare or an abrupt flare. The tendency to balloon is magnified if the approach is flown fast. Overrotation will increase the pitch angle (or

AOA) and generate lift. Lift will also increase as the aircraft enters ground effect. The combination of the increased pitch angle and ground effect will cause the aircraft to balloon. Although ballooning can occur at any flap setting, the chances are greatest with a zero- or 10-degree flap set. The higher airspeeds associated with partial or no-flap landings will make the flight controls more sensitive, resulting in a greater opportunity to balloon the landing.

4.13.2.3. A bounced landing is caused by failure to complete the flare, landing hard, and bouncing into the air. If you allow your airspeed to get too low, you can generate a high sink and drop the aircraft onto the runway and bounce. Other irregularities during the flare may cause you to bounce the aircraft—pumping the yoke while feeling for the runway, experiencing a gust of wind, or entering wake turbulence.

4.13.2.4. Both balloon and bounce are indicated by being above the runway in a nose-high attitude with your airspeed decreasing rapidly. If your deviation is minor, reestablish a normal landing attitude and hold it until you touch down. After touchdown, continue with normal procedures. If your deviation is large, perform a go-around immediately. Do not try to salvage the landing. During the go-around, lower the nose of the aircraft to a safe attitude and maintain directional control. The aircraft may fly back to the runway while the engines are accelerating to go-around N_1. If this happens after you initiate the go-around, do not change your mind and attempt a landing. If the bounce resulted in a hard landing, do not retract the landing gear during the go-around because it might have been damaged.

4.13.3. **Underrotation.** Because of the placement of the engines toward the rear of the aircraft, the T-1A does not tend to fly itself off the runway. Therefore, it is necessary for you to positively rotate to 13- to 15-degree nose up to assume the proper takeoff attitude.

4.13.4. **Overrotation.** Overrotation can occur during initial takeoff or touch-and-go takeoffs. It is the result of an abrupt or excessive application of back pressure in relation to airspeed, which can cause a premature (low speed) liftoff. Maintaining landing attitude while applying power for touch-and-go takeoffs may also cause a premature liftoff. To correct this situation, lower the nose to the normal takeoff attitude and allow the aircraft to accelerate.

4.13.5. **Porpoise.** Improper control inputs during the touchdown can cause the T-1A to porpoise. The porpoise is a series of bounces between the main gear and the nose gear. If a porpoising action starts, you may not be able to correct it by using pitch control alone. The best remedy for a porpoise is an immediate go-around with maximum power (go-around N_1) and the control yoke slightly aft of neutral.

Chapter 5

NIGHT FLYING

5.1. Spatial Disorientation:

5.1.1. A pilot is much more susceptible to spatial disorientation at night than during the day. Maneuvers that require large attitude changes like rotation or go-around could increase the magnitude of spatial disorientation. Also, depth perception at night is not as reliable. Before takeoff, always study the airfield diagram, especially at a strange field. Get a good mental picture of the active runway and taxiways leading to it.

5.1.2. Once your eyes are adapted to the dark, a momentary glance at bright light will reduce their adaptation. The T-1A has adjustable interior, console, and instrument lighting. Many of the instrument screens are multicolored and adjustable. Adjust all lights to the minimum intensity necessary to read the instruments to allow you to maintain night vision and keeps reflections to a minimum. With bright instrument lights, you are unable to distinguish objects outside the flight deck until your eyes readjust.

5.1.3. Review TO 1T-1A-1 (T-1A flight manual) for the operation of lights and switches before a night flight. Spend sufficient time in the flight deck before a night flight to familiarize yourself with the location and operation of the light switches.

5.1.4. In preparation for night flying at SUPT bases, you should receive briefings on the following information before the first night sortie: spatial disorientation, visual illusions, specific departure and arrival procedures, and terrain avoidance (including minimum safe altitudes).

5.2. Inspections and Checks:

5.2.1. Thoroughly check all exterior aircraft lighting. At home station, the crew chiefs will check the exterior lighting in accordance with required inspections (that is, preflight [PR]/basic postflight [BPO] or through flight [TH]). At other than home station, the aircrew will accomplish the inspection.

5.2.2. Make sure the windshield and instrument screens are clean and free of dust and dirt. Scratches and dirt cause reflections and distortions. Ask the ground crew to wipe spots off on the instrument panel and windshield. Do <u>not</u> use your glove to wipe dirt off the instrument screens.

5.2.3. Check all interior, console, and instrument lights. Adjust the light rheostats to the lowest practical setting and dim the caution, warning, and indicator lights to avoid excessive flight deck reflection and brightness. This is especially important during traffic pattern operation where windscreen or flight deck glare and bright lights can seriously restrict visibility at a time when clearing is most important.

5.2.4. Know the location of important switches and levers by touch to avoid operating the wrong one in a dim or dark flight deck. The flap lever, flap indicator, and landing gear handle are items particularly critical in the landing pattern.

5.2.5. When using taxi lights, be careful not to blind the ground crew, especially individuals giving taxi directions. (Refer to local flying publications for additional guidance.)

5.2.6. Use landing lights for all takeoffs and landings.

5.3. Taxiing. Speed and distance are deceptive during night operations. Always taxi slower at night and use the landing lights. Taxi on the yellow taxi lines.

5.4. Takeoff. Line up in the center of the runway; recheck your electronic horizontal situation indicator (EHSI) and EADI. Use a composite method of aircraft control by remaining oriented to instrument references and outside objects as assurance against spatial disorientation. Immediately after takeoff, you may have to transition completely to the flight instruments especially on dark nights (for example, an overcast or no-moon night). This transition must occur when there are no available outside references such as a definite horizon or ground lights. Ensure you are safely airborne with a positive rate of climb before calling for landing gear retraction.

5.5. Night Operations:

5.5.1. Conduct a more deliberate visual search pattern at night because ground lights often appear to be aircraft lights and position lights on other aircraft may blend in with ground lights. Do not hesitate to use the TCAS and information from a ground radar controller to help you separate traffic from other lights.

5.5.2. At night, lighted objects often appear closer than they actually are. To overcome the decrease in visual acuity, use your instruments to a greater extent, but continue outside clearing. You will find it more difficult to judge altitude and rate of descent close to the ground. Therefore, you must depend more on the altimeter, VSI, and radio altimeter. Without a definite horizon reference, cross-check the EADI to help you determine the proper aircraft attitude. Use all crewmembers to help observe available references. If you find yourself in an unusual attitude or detect the effects of spatial disorientation, immediately transition to your flight instruments and recover. Also consider transferring aircraft control. ***NOTE:*** Causes and hazards of spatial disorientation are described in AFMAN 11-217, Volume 1; and all aircrews must clearly understand these before night flying.

CAUTION

Use particular caution at night when descending for traffic entry because the altitude above the ground can be very deceptive. Use the radio altimeter as a backup. Closely check the altimeter during night flying to ensure you are reading it correctly.

5.5.3. Handle night emergencies the same as daylight emergency situations. Remember, however, that it is much easier to get disoriented during an emergency at night. Use all crewmembers to help you read checklists and perform emergency procedures.

5.5.4. When flying approaches, especially to a strange field, you may experience visual illusions caused by one or more of the following: sloping or featureless approach terrain, sloping runways, varying runway widths, runway lighting intensity, and weather phenomena. Constantly cross-check your instruments and the optical landing system to help compensate for these illusions. Reference the Flight Information Handbook for a description of the approach lighting systems and the different visual glide slope indicators.

5.6. Traffic Patterns. At bases other than home field, glidepath guidance must be available and monitored during night VFR pattern operations. Glidepath assistance is not required if you are flying an en route descent and not descending below published minimum descent altitude (MDA). Visual (VASI, PAPI, FLOLS) or precision (ILS) systems constitute acceptable glidepath guidance.

5.6.1. **VFR Pattern (Rectangular or Overhead):**

5.6.1.1. The base turn to final and final approach are the same at night as in the daytime. After rolling wings level on final, concentrate on the descent and plan to touch down between 500 and

2,000 feet down the runway on the center line. Keep your eyes moving. Do not stare at any bright lights on the ground because it is easy to confuse a moving light with a stationary one. Approaching the overrun, use the landing light to pick up the surface of the overrun and hard surface of the runway. Do not use runway lights as the only reference for judging the height above the runway because doing so may cause an early pitch change for landing and dropped-in touchdowns.

5.6.1.2. Use the same throttle technique at night as in the daytime and continue to use the runway surface for final pitch adjustments just before touchdown. Constantly monitor attitude, rate of descent, and power—especially on short final.

5.6.2. **Straight-In Pattern.** Use composite flight techniques; do not fly the approach entirely on flight instruments. Use available visual references to maintain proper glidepath and runway alignment. The rest of the final approach and flare are identical to the rectangular pattern.

5.6.3. **Touch-and-Go Procedures.** At night while performing touch-and-go landings, you will need to rely more on instruments to compensate for fewer outside visual cues. Also, things appear to happen faster than in the daytime--especially during this critical phase of flight.

Chapter 6

INSTRUMENT FLYING

6.1. Instrument Cross-Check. Use the control and performance concept of instrument flying as described in AFMAN 11-217, Volume 1. Tailor your cross-check to the particular maneuver or procedure being performed.

6.2. Instrument Takeoff:

6.2.1. The instrument takeoff is taught to develop proficiency in performing takeoffs without relying totally on references outside the flight deck. With practice, you will be able to transition smoothly and safely from outside visual references to instruments if you encounter restricted visibility during or shortly after takeoff.

6.2.2. It is rarely necessary to make a takeoff using instruments only. Even during low-visibility conditions, visual references such as runway lights, the center line, or runway edges are usually visible. During an actual instrument takeoff, use a composite cross-check.

6.2.3. If you expect to encounter instrument conditions soon after takeoff, you should prepare an emergency plan (to include a planned approach for return) and brief the crew on the plan. If the ceiling is above circling minimums, remaining in visual conditions and circling back to the airfield could offer the quickest and safest way to recover the aircraft.

6.2.4. When cleared for takeoff, align the aircraft with the center of the runway. Normally, perform a static takeoff. Hold the brakes and note the heading to be maintained during the takeoff roll. Release brakes evenly to avoid swerving. Use outside visual cues to provide the primary reference for directional control. At 80 KIAS, check the airspeed indicator for proper operation and aircraft acceleration. Initiate rotation at V_{rot}, set a takeoff pitch of 13 to 15 degrees, and use a combination of outside and instrument references to maintain aircraft attitude.

6.2.5. When the aircraft leaves the ground, control the pitch-and-bank attitude, using a composite cross-check. Complete the transition from visual references to instruments at a rate equal to the rate of deterioration of the outside references. Pitch-and-roll visual references are usually lost first, followed by heading or runway references.

6.2.6. When the aircraft is established in a positive climb, call for gear retraction. A positive climb is established when the VSI and outside references (when available) show a climb. Call for flap retraction at 400 feet AGL and an airspeed not less than V_{co} + 10 KIAS. Do not begin a turn during an instrument departure until climbing to at least 400 feet AGL unless otherwise instructed. It is a good technique to verbalize your resolution advisory (RA) or VSI and altitude indicator cross-checks before raising the landing gear and flaps.

6.3. Instrument Departure:

6.3.1. During the preflight briefing, make sure you are familiar with all standard instrument departures (SID) and departure procedures for the departure field. After retracting the flaps, adjust the pitch attitude to approximately 10 degrees nose up on the EADI and accelerate to climb speed--220 KIAS or as planned.

6.3.2. Comply with your departure clearance during the climb to altitude. It is important to stay ahead of the aircraft during the departure. If you are receiving radar vectors, attempt to anticipate the controller's instructions and be ready to proceed with your own navigation when directed. Strive to make smooth and gradual corrections to pitch, heading, and bank—always attempting to keep the aircraft trimmed.

6.3.3. Be sure to comply with all climb checks. You may use the navigation (NAV) mode of your flight director to help maintain course during the climb.

6.4. Leveloff:

6.4.1. If an IFR departure necessitates leveling off at an intermediate altitude before continuing the climb to final altitude, level off and maintain airspeed as required. The PNF should make the appropriate altitude advisory calls.

6.4.2. Level off at cruise altitude and maintain the preplanned airspeed. For rapid rates of climb, initiate leveloff transition 1,000 feet below the desired level off altitude. For moderate rates of climb, begin leveloff transition at 10 percent of the RA or VSI rate of climb indication below the desired leveloff altitude. Use the crew concept to verbalize altitudes and back up the pilot as the aircraft approaches level off. To avoid overshooting the cruise altitude, use the altitude alert or select.

6.4.3. To level off at an airspeed below climb speed, lower the nose to level flight and retard the throttles sufficiently to reduce the airspeed. The magnitude of the airspeed change determines the power setting. As you approach the desired airspeed, adjust the power as necessary to maintain it.

6.4.4. To level off at an airspeed higher than climb speed, leave the power at climb setting until you approach the desired airspeed. Then reduce the throttles to the power setting that maintains the airspeed.

6.5. Change of Airspeed. In order to maintain altitude while changing airspeed, remember that increased airspeed equals a decrease in AOA, which creates a requirement to increase nose-down trim. The opposite is true for a decrease in airspeed. Use smooth and constant pitch adjustments, anticipate the required corrections, and trim throughout the maneuver.

6.6. Turns. Perform instrument normal turns and steep turns with the same procedures used for visual turns. Use the EADI for bank control in all turns.

6.6.1. **Normal Turns:**

6.6.1.1. For a normal turn, use 30 degrees of bank. For turns less than 30 degrees of heading change, use the same number of degrees to turn as the bank angle.

6.6.1.2. When the desired AOB is reached, it may be necessary to exert slight control wheel pressure in the opposite direction to prevent the bank from increasing beyond the desired amount. Maintain an exact AOB.

6.6.1.3. Adjust the power to hold a constant airspeed. As the bank is established, a small increase in power is usually required. Use trim throughout the turn to relieve the back pressure necessary to hold level flight.

6.6.2. **Steep Turns.** Practice steep turns at 45 degrees of bank and various airspeeds. A turn with greater than 30 degrees AOB is seldom advisable when flying on instruments. If a steep turn becomes

necessary, perform it with precision. A steep turn is a good maneuver to use to improve your skill in reacting smoothly to rapid changes of attitude.

6.7. Climbs and Descents. Practice both constant airspeed and constant rate climbs and descents at various airspeeds and configurations that correspond to those used in actual instrument flight. The indicated Mach number provides an approximation of the vertical speed change for a given pitch change. For example, at 0.6 Mach, a 1-degree pitch change gives approximately a 600 fpm climb or descent. A change in pitch sensitivity increases as the Mach number increases.

6.8. Vertical-S Maneuvers:

6.8.1. Fly vertical-S maneuvers as described in AFMAN 11-217, Volume 1, normally using an airspeed of 160 KIAS. Your instructor may designate different airspeeds, configuration, altitude blocks, and/or climb rates as your proficiency improves.

6.8.2. The benefits derived from improved aircraft control and cross-check technique will be evident in your instrument flying. **Table 6.1.** contains a summary of power settings and airspeeds useful for flying vertical-S maneuvers.

Table 6.1. Summary of Power Settings and Airspeeds.

ITEM	A	B	C
	Maneuver	**Percent of Power N_1**	**KIAS**
1	Holding (15,000 feet)	77	180
2	Penetration	idle 2,000 fpm/idle 3,000 fpm	180/250
3	Nonprecision final 1,000 fpm 30-degree flaps	62	V_{app}
4	Precision final 600 fpm 30-degree flaps	66	
5	1,000 fpm climb (15,000 feet)	86	160
6	1,000 fpm descent (15,000 feet)	flight idle 64	
7	Radar downwind	66/75	200/250

6.9. IFR Unusual Attitudes. An unusual attitude is any unexpected or inadvertent attitude encountered, but not required, for normal instrument flight. Some possible causes of unusual attitudes are a slow cross-check, spatial disorientation, turbulence, and transition from VMC to IMC. In all unusual attitude situations, confirm your situation by referencing the standby attitude indicator and the performance instruments prior to initiating a recovery.

6.9.1. **Recovery Procedures:**

6.9.1.1. When faced with a suspected unusual attitude, **recognize, confirm, and recover.**

6.9.1.2. The EADI is the primary instrument used to recover from an unusual attitude.

6.9.1.3. The most important requirement to recover from IFR-unusual attitudes are AOB, attitude interpretation, and proper application of flight controls to return to level flight.

6.9.2. **Nose-High Recovery:**

6.9.2.1. Apply power as required up to maximum continuous thrust and roll into a bank to help reduce the pitch attitude. Do not exceed 45 degrees AOB. Allow the nose to slice smoothly toward the horizon. Apply sufficient control column back pressure to maintain positive G, using care not to approach a stall. Avoid creating negative-G conditions.

6.9.2.2. As the miniature aircraft symbol approaches the EADI horizon reference, smoothly roll wings level, adjust your pitch attitude for level flight, and reset power to maintain desired airspeed. If airspeed is too low to allow a safe leveloff and sufficient altitude exists, consider letting the aircraft pitch go below level flight to allow the aircraft to accelerate.

6.9.3. **Nose-Low Recovery:**

6.9.3.1. Roll the wings level, adjust the pitch to return to level flight, and control the airspeed by reducing the power and, if necessary, extending the speed brakes. As the miniature aircraft approaches the EADI horizon reference, adjust your pitch attitude for level flight and reset the power to maintain desired airspeed.

6.9.3.2. Avoid exceeding aircraft structural and acceleration limitations.

6.10. Course and Arc Intercepts and Fix-to-Fix Navigation:

6.10.1. Use the techniques and procedures in AFMAN 11-217, Volume 1, for intercepting and maintaining courses and arcs and for accomplishing a fix-to-fix navigation.

6.10.2. T-1A missions incorporate many capabilities of the flight management system (FMS). You must be able to manually perform the functions offered by the FMS, such as course intercepts and fix-to-fix navigation. Although these FMS functions are to assist you, do not over-rely on the FMS. Many aircrews tend to “bury their heads” in the cockpit while operating the FMS. The PF must concentrate on flying the aircraft, not on what is happening on the center console. Remember—first aviate, then navigate, then communicate. Refer to TO 1A-1T-1 (T-1A flight manual) for specific FMS procedures and capabilities.

6.11. Holding. Procedures for entering and leaving the holding pattern are described in FLIP General Planning; AFMAN 11-217, Volume 1; and TO 1A-1T-1 (T-1A flight manual). Use 180 KIAS for holding at all altitudes. However, if endurance is a factor, refer to the maximum endurance charts in TO 1A-1T-1 (T-1A flight manual) for altitude and airspeed. To descend in the holding pattern, adjust the power as required and maintain 180 KIAS.

6.12. Jet Penetrations and Descents. Penetrations and en route descents should be done with maximum fuel conservation when possible. Once departing the en route structure, you should know where you are in relation to the final approach course, the final approach fix (FAF), and the airfield. This position orientation helps you plan ahead and prepare to fly the approach when clearance is received.

6.12.1. **TACAN or VOR Penetration:**

6.12.1.1. Entry airspeed for the penetration depends on whether it is started on station passage from an en route cruise or a holding pattern. If holding is not required, obtain desired penetration

airspeed or below (according to **Table 6.1.**) before crossing the initial approach fix. Ensure you are familiar with minimum and emergency safe altitudes, field elevation, and other associated information for recovery (weather, altimeter setting, type of approach, etc.) before initiating a penetration or descent.

6.12.1.2. To initiate the penetration, retard the throttles to idle and, if required, extend the speed brakes. Select 10-degree flaps and/or landing gear (altitude and speed permitting) if you need a steeper descent. Plan to use penetration airspeed. If a steeper descent gradient becomes necessary in order to meet mandatory altitude restrictions, increase penetration airspeed. Ensure you do not exceed the airspeeds outlined in applicable directives. Monitor your altitude carefully during the penetration. Because of the high rates of descent associated with this phase of flight, you can easily misjudge the altitude and/or misread the altitude indicator. ***NOTE:*** If icing is a factor, retarding throttles to idle will de-energize the anti-icing circuit in the wing's leading edge. In this case, consider requesting an en route descent.

6.12.1.3. You may want to decrease the rate of descent as you approach the leveloff altitude. To do so, increase the pitch attitude and allow the airspeed to decrease. When the normal lead point for leveloff is reached, smoothly adjust the pitch to level flight, adjust the power, and retract the speed brakes as required.

6.12.1.4. Use standard penetration procedures for non-distance measuring equipment (DME) teardrop penetrations. Their design should allow you to comply with descent gradients and altitude restrictions and remain within the specified distance from the facility. During TACAN or VOR/DME penetrations, these procedures may be altered as necessary to comply with altitude restrictions.

6.12.2. **En Route Descent.** Plan to arrive at the FAF at the proper altitude and airspeed to begin the approach. A technique for flying the descent is to divide the altitude to lose in hundreds of feet by the distance to travel in miles to determine the no-wind pitch attitude. For example, let's assume the en route descent to an ILS final starts at FL 370, the altitude at the FAF is 2,000 feet MSL, and you are 70 miles from the FAF. Thus, you have 35,000 feet to lose in 70 miles, or 500 feet per mile. You should set 5 degrees below the level-flight picture on the EADI. Use 10 percent of your RA or VSI for the lead point for leveloffs. The PNF should make the appropriate altitude advisory calls.

6.13. Instrument Approaches:

6.13.1. **General.** The T-1A is a Category B aircraft for instrument approaches; it is normally a Category C for determining circling minimums. Depending on total gross weight and configuration of the aircraft, you may have to adjust the category and minimums for the approach you are accomplishing. Refer to FLIP General Planning for the appropriate speeds.

6.13.2. **Nonprecision Approaches (TACAN, VOR, NDB, Localizer [LOC], Airport Surveillance Radar [ASR]):**

6.13.2.1. Use procedures in TO 1T-1A-1 (T-1A flight manual). Configure and begin slowing to V_{app} (**Figure 4.1.**) prior to the FAF. As a technique, slow and lower 10-degree flaps and landing gear approximately 3 to 5 miles prior to the FAF. Configure with final flaps approximately 1 mile from FAF. Maintain V_{app} while descending from the FAF altitude to the MDA. If single engine, normally fly the final with 10-degree flaps at single engine V_{app}. Remember to add 10 knots to all approach speeds if you will exceed 15 degrees of bank.

6.13.2.2. For nonprecision approaches, you should understand the difficulties involved with transition to landing. Plan your descent to reach the MDA before the visual descent point (VDP). For most nonprecision approaches, a descent rate of 800 to 1,000 feet per minute will allow you to reach the MDA before the VDP. Not reaching MDA until the missed approach point (MAP) will, in most cases, result in a missed approach.

6.13.3. **Precision Approaches (ILS and PAR):**

6.13.3.1. As a technique, slow and lower 10-degree flaps and landing gear approximately 3 to 5 miles prior to glide slope intercept. Configure with final flaps approximately 1 mile from the glide slope intercept point and slow to V_{app}. Attempt to have a stabilized airspeed and trim setting before intercepting the glide slope.

6.13.3.2. An initial descent rate may be computed by using the glide slope angle (AFMAN 11-217, Volume 1). As you start down the glide slope, one technique for getting the desired descent rate is to lower the nose on the EADI the number of degrees of the glide slope and make a slight power reduction.

6.13.3.3. For an ILS, set the published course in the digital active course display and arm the approach mode (if desired) by depressing the APPR button on the mode select panel. If you are using the flight director for guidance, select APPR mode when the aircraft heading is within 90 degrees of the inbound course. When approach mode is selected, automatic crosswind correction is provided using crab angles up to 30 degrees. Refer to the TO 1T-1A-1 (T-1A flight manual) for complete information. ***NOTE:*** In APPR mode, maximum commanded AOB is 15 degrees, which may result in overshooting the LOC.

6.13.4. **No-Gyro Approach.** This approach is usually flown in conjunction with ASR or PAR procedures when heading gyros are unreliable. At the typical T-1A final approach speed, 20 degrees is the approximate standard rate turn AOB. Use 10 degrees for one-half the standard rate turn AOB. (Refer to the 60:1 rules in AFMAN 11-217, Volume 2.) Use standard rate turns prior to final approach and one-half the standard rate turns on final. Use all available information to help maintain position awareness.

6.13.5. **Low Altitude Instrument Approaches.** Before initiating a low altitude instrument approach, slow the aircraft to the appropriate airspeed in a clean configuration. Follow AFMAN 11-217, Volume 1, guidance pertaining to the specific approach you are flying. In general, maintain holding airspeed (180 KIAS) during maneuvering. Begin configuring the aircraft as early as necessary to stabilize at V_{app} prior to the FAF. This may require you to configure on the outbound leg of either a procedure turn or a holding in lieu of a procedure turn.

6.14. Transition to Landing:

6.14.1. The main purpose of an instrument approach is to get within visual range of the runway so you can land. The transition from instruments to visual references can be difficult. In addition, runway conditions at the airfield can affect stopping distance.

6.14.2. A precision approach flown to the decision height (DH) will result in a landing almost 2,000 feet down the runway. Any attitude change to attempt to land within the first 1,000 feet may produce a high sink rate and a short or hard landing. At DH (200 feet) on a 3-degree glidepath, the aircraft is approximately 4,000 feet from the runway. If you couple this with a downward vision angle restriction

and low visibility, the visual perspective may be less than 1,200 feet from the runway. The approach lights may be the only part of the runway in sight. You may not see the runway, and there will be limited visual cues to identify a sink rate or the possibility of landing short. However, at this point you must start transitioning to visual references. The transition period lasts until just about the point where the flare begins. Control inputs during this brief transition must be limited to those required to maintain glidepath to the flare. This prevents the hazards inherent in a duck-under maneuver.

6.14.3. The runway point of intercept (RPI) represents the point on the runway where the glide slope joins the runway. To the RPI, add the distance it takes to flare the aircraft, and you will have the approximate touchdown point. The specific RPI for a radar approach is listed in the FLIP Terminal Approach books. The ILS RPI is normally the same. Base your landing decision on the touchdown point from a precision approach. If stopping distance is insufficient, proceed to an alternate.

6.14.4. For a nonprecision approach, being at the MDA at the MAP usually results in a missed approach. The MAP for a nonprecision approach is usually less than 1/2 mile from the runway. By using pitch change relationships from AFMAN 11-217, Volume 1, you can see that at 400 feet AGL at 1/2 mile requires at least an 8-degree descent for landing at the runway threshold. This requires an extreme pitch change and a very high sink rate. When using a normal descent rate, it takes approximately 1 mile to get to runway elevation. This places the aircraft at least 3,000 feet down the runway before the flare is started. There is a point before the MAP where transition to a normal glidepath is accomplished. This point is referred to as the VDP and is published on many nonprecision approaches.

6.14.5. The transition from instruments to visual flight conditions varies with each approach. The point where the aircraft breaks out below a ceiling frequently offers limited visual cues for aircraft control. At times, there can be instantaneous recognition of the aircraft's position in relation to the runway. But, at other times, visual cues are indistinct and the amount of displacement from the runway, both vertical and lateral, are not clear. By understanding the limitations caused by the weather, you are better prepared to transition at the VDP.

6.15. Circling Approach:

6.15.1. When flying a circling approach, plan to maintain a minimum of computed V_{app} (**Figure 4.1.**) with gear and 10-degree flaps until configuring, but remember to fly at least 10 knots above your set V_{app} when you exceed 15 degrees of bank. Select final flap setting not later than departing the MDA and intercepting a normal glidepath to the landing runway. Consider the possibility of an asymmetrical flap condition causing an unscheduled rolling moment while you are configuring during a turn at low altitude. Use circling minimums and altitudes for the runway to which you execute the approach, not for the runway of intended landing. Do not practice the circling maneuver in the single-engine or no-flap configuration.

6.15.2. For maneuvering at circling MDA, note that the visual cues for proper runway displacement are considerably different from those commonly used in the rectangular pattern. Because circling minimums are significantly lower than the rectangular pattern altitude, proper runway displacement looks considerably wider than from a normal pattern. Use caution and do not place the circling downwind too tight. As in the normal pattern, compensate for wind and avoid excessive bank angles (plan 30 degrees maximum) close to the ground, especially because this may be a level turn. Plan the circling approach to roll out on final a minimum of 1/2 mile from the end of the runway.

6.15.3. Flying a circle from cross-cockpit can make visual contact with the runway environment difficult. Prior to the circle, ensure the PNF understands what you expect. He or she should inform you of drift into or away from the runway and tell you when you are abeam the approach end. Use your crew to help you execute the circle.

6.16. Missed Approach:

6.16.1. The point to initiate a missed approach varies with the approach being flown. (Reference AFMAN 11-217, Volume 1, for missed approach procedures.) To execute a missed approach, advance the throttles to a maximum of go-around N_1. (You may activate the go-around button on the left throttle.) Do not delay the go-around or sacrifice aircraft control to activate the go-around button. Execute a go-around and fly the published missed approach or appropriate instructions while accelerating to 180 KIAS or as required.

6.16.2. If a single-engine missed approach is necessary, use go-around N_1 and follow the procedures in TO 1T-1A-1 (T-1A flight manual). Be prepared to use rudder and bank angle as necessary for coordinated flight. Do not attempt an actual or practice single-engine missed approach after selecting 30-degree flaps.

6.17. Flight Management System (FMS):

6.17.1. The FMS provides backup flight plan management and navigational capabilities through conventional radio NAVAIDs and its own data base of fixes and routes. Do not use FMS for navigation with an expired database unless the data has been appropriately verified as accurate with the current FLIP. The same rule applies for the pilot route list. See AFI 11-2T-1, Volume 3, for other restrictions.

6.17.2. The FMS is simple to understand and use after you become acquainted with its organization. However, be aware of the tendency to rely too much on the FMS once you have become accustomed to it. You must always maintain your situational awareness.

6.18. Electronic Flight Instrument System (EFIS). The EFIS provides flight information, using electronic multicolor displays. EADI and EHSI provide the pilots with traditional attitude director indicator and horizontal situation indicator displays, along with the capability to tailor the display format to the task being performed. The EHSI, in particular, has several display modes, each of which is well suited for a particular situation.

Chapter 7

NAVIGATION

7.1. Requirements. Required items are listed in AFI 11-2T-1, Volume 3.

7.2. Preflight Planning and Briefing:

7.2.1. The mechanical requirements of in-flight navigation can be greatly reduced by thorough preflight planning. The major differences in flight planning for the T-1A involve distances and altitudes, types of missions flown, and performance data.

7.2.2. Plan the flight at altitudes and airspeeds consistent with mission requirements and safety. Remember that the T-1A is limited to a maximum altitude of FL 410. In most cases, the best cruise altitude is between FL 330 and 390, depending on distance, weather, wind, etc. As a technique, use FL 330 to 390 for flying distances greater than 300 nm. For flying distances less than 300 nm, use FL 180 to 310. Plan your flight to climb directly to cruise altitude when cleared. Flying at a lower altitude until the aircraft's gross weight decreases actually decreases your overall fuel economy due to decreased engine fuel efficiency at the lower altitude.

7.2.3. It is essential to conduct sound flight planning, which includes a thorough check of en route, destination, and alternate weather. Also, ensure all applicable FLIP documents are reviewed according to AFMAN 11-217, Volume 1. En route adjustments may become necessary at any time, depending on the actual en route weather and changes that occur in the weather at your destination. In fact, experience has shown it is unwise to plan a mission to arrive at the destination with only the minimum required fuel. This practice can significantly reduce your options if en route delays are experienced, landing delays are encountered, or a diversion to another airfield becomes necessary. Be sure to include a review of en route airfields for possible emergency or diversion use. Start with a sound plan and always keep a backup plan in mind.

7.2.4. Carefully compute and update takeoff and landing data regardless of the airfield. Variations in pressure altitude, temperature, and runway data can cause major deviations from the computations you are accustomed to with home field operations.

7.3. Ground Operations:

7.3.1. Ensure transient alert personnel are familiar with start and post-start procedures. At other than home station, the ground crew at a minimum should be prebriefed on engine start procedures (normal and emergency) and coordinated actions for the flap check and speed brake check. Normally, a ground power unit will be used. If a ground power unit is not available, use the procedures in TO 1T-1A-1 (T-1A flight manual) for a battery start.

7.3.2. Normally, before starting engines, confirm the status of your clearance with ground control or clearance delivery. If any delay is anticipated, consider not starting the engines until clearance is received. This is a good opportunity to practice fuel economy. If performing a battery start, closely monitor the battery voltage to ensure sufficient power is available for starting.

7.3.3. After receiving ATC clearance, carefully check it against your original plan to ensure your ability to conform with clearance requirements. Once you accept a clearance, the air route traffic control center (ARTCC) expects you to fly it as accepted.

7.4. Departure:

7.4.1. Before takeoff, plan for the departure by reviewing departure routing and altitude restrictions. The ARTCC may change your clearance by giving you radar vectors, changes in altitude, or changes in route of flight. The better your preflight planning, the more easily you can handle the changes.

7.4.2. If departing VFR, check for any local procedures that may affect your departure (noise abatement procedures, preferred routing, etc.). At most airports, you will be given departure instructions concerning your initial turn out of traffic as well as a departure control frequency you must monitor until out of Class C airspace. If you are departing an airport VFR near Class B airspace, be particularly cautious. Make sure you know the altitudes and boundaries associated with the Class B airspace (use a sectional chart) because ATC must be contacted on the appropriate frequency for authorization before entering Class B airspace. For further information on airspace classifications, consult the FLIP General Planning and AP/1 as well as the Airman's Information Manual.

7.4.3. At leveloff, make a comparison of aircraft position and fuel remaining against the preplanned position and fuel. If there are any significant deviations, you may need to request a change of flight plan.

7.5. En Route:

7.5.1. After leveloff, accelerate to the desired indicated Mach number and set fuel flow to maintain that airspeed. Use the information found in Part 5 of TO 1T-1A-1-1, *Appendix 1, Performance Data Flight Manual, USAF Series T-1A Aircraft*, to determine the best airspeed and fuel flow for your cruise altitude.

7.5.2. When you arrive at a planned point on your flight plan, note the actual time of arrival and the fuel remaining on your AF Form 70, **Pilot's Flight Plan and Flight Log.** Compare the actual time of arrival with the estimated time of arrival (ETA) and compare the actual fuel on board with the estimated fuel remaining. Check the aircraft performance to determine if the actual performance corresponds to the planned performance.

7.5.2.1. Differences in performance may be the result of several factors. Incorrect planning (for example, using incorrect fuel flow data or making math errors) can cause differences between planned and actual performance. Substandard aircraft performance (for example, higher fuel flow required to maintain planned airspeed) or incorrect planning data (for example, wind different than forecast) can also result in discrepancies between planned and actual performance. The AF Form 70 in **Figure 7.1.** was prepared during preflight, assuming no wind and maintaining a preplanned indicated airspeed (IAS) or true airspeed (TAS). The actual conditions shown on the right side of the form include wind from the west at 40 knots stronger than predicted, which created a need to adjust the flight plan slightly.

Figure 7.1. Sample AF Form 70, Pilot's Flight Plan and Flight Log.

PILOT'S FLIGHT PLAN AND FLIGHT LOG

CLEARANCE	TAKE-OFF, CLIMB, CRUISE DATA
	10,000 MSL FF = 1200 PPH TOT at G = 1100 HRS

FREQUENCIES

DEP FIELD DATA	TOTAL DIST	TOTAL ETE	TOTAL FUEL
	143.5	35+56	At Start of Route 4500

ROUTE / FIX	IDENT / FREQ	LAT/IDENT / LONG/FREQ	MAG CRS	DIST	GND SPD	ETE	ETCH ATA	FUEL	ACTUAL FUEL
A	ICT	N 37:44.0	---	TOTAL	---	---	10:24+04	---	4500
	113.8	W 96:35.0		143.5		---	ENTER	4500	
B	EMP	N 38:44.0	065	25.5	240	6+26	10:30+30	130	4390
	112.8	W 96:13.0		118.0		6+26	10:29+34	4370	
C	EMP	N 39:34.0	351	32.0	240	8+00	10:38+30	160	4230
	112.8	W 96:19.0		86.0		14+26	10:37+34	4210	
D	EMP	N 37:54.0	351	15.0	240	3+45	10:42+15	80	4150
	112.8	W 96:22.0		71.0		18+11	10:41+19	4130	
E	EMP	N 37:57.0	274	18.0	240	4+30	10:46+45	90	4040
	112.8	W 96:45.0		53.0		22+41	10:46+43	4040	
F	SLN	N 39:34.0	287	14.0	240	3+30	10:50+15	70	3950
	117.1	W 97:02.0		39.0		26+11	10:50+55	3970	
G	SLN	N 38:44.0	256	39.0	240	9+45	11:00	200	3710
	117.1	W 97:50.0		0		35+56	11:02+37	3770	

AF FORM 70, 19781001 *(EF-V1)* PREVIOUS EDITION WILL BE USED

7.5.2.2. If actual performance differs from the flight plan, recalculate your ETA, estimated time en route (ETE), and fuel used en route to your destination. You must take the proper action to accommodate the differences. This may be critical if your actual performance is less than your planned performance. You can take the following actions in this situation: 1) Change your altitude to take advantage of different winds or a different fuel flow rate at a new altitude, 2) Change your route of flight, or 3) Divert to a new destination as necessary.

7.5.3. When flying an en route navigation mission, use lead points for all turns. For the low altitude system, a lead point is required to remain within the protected airspace of the airway. In the jet route system, you may lead a turn to help intercept the desired course.

7.5.4. The PNF or jumpseat pilot will ensure previous ATC frequencies are available in case the crew is unable to contact the controller on a newly assigned frequency. This will enable the crew to easily contact the previous controller for clarification or assistance.

7.5.5. Maintain a constant awareness of position through the use of NAVAIDs, map-reading, and dead reckoning (DR). Although complete radio and NAVAID equipment failures are rare, they can occur and you should be prepared.

7.5.6. Monitor the NAVAID signal (aurally or visually) to ensure the proper NAVAID is in use. An alphabetic identifier displayed on the EHSI is the same as identifying and monitoring the NAVAID aurally when navigating with a VOR. All other NAVAIDs must aurally identify the Morse code to ensure a reliable signal. The FMS displays an alphanumeric identification of active NAVAIDs. NAVAID identifiers are depicted on FLIP en route charts and instrument procedures. Set the EHSI to show the appropriate bearing pointer so you can accurately monitor your position. An absent bearing pointer may be due to a failure to select the proper pointer on the EHSI. It may also be due to an unreliable signal from the navigation facility.

7.5.7. On published jet routes and airways, the changeover point is normally halfway between NAVAIDs or as designated on the en route chart. Select the published inbound or outbound course on the EHSI by manually changing the course knob. If you are using FMS guidance, monitor en route NAVAIDs to cross-check FMS guidance.

7.5.8. When flying VFR point to point, you may receive altimeter settings and traffic advisories by maintaining flight following with the ARTCC. If you choose not to maintain flight following or it is not available, use flight service stations (FSS) for the following services: en route altimeter settings, IFR or VFR flight plan changes and en route or destination weather. Pilot-to-metro service (PMSV) and automated terminal information service (ATIS) are two additional sources you may use to obtain en route and terminal weather information.

7.6. Arrival and Landing:

7.6.1. Refer to AFMAN 11-217, Volume 1; TO 1T-1A-1 (T-1A flight manual); and **Chapter 6** of this manual for penetrations, en route descents, and instrument approach procedures.

7.6.2. Determine what type of approach is required at the destination. Some approaches require extensive cruise at lower altitudes and may not be desirable because of excessive fuel consumption.

7.6.3. Your preflight planning should have familiarized you with the airfield layout, approach lighting, type of VASI, field elevation, runway data, tower and ground control frequencies, and expected weather for both your primary and alternate destinations. When you are within radio range, update the destination airfield data and weather information through FSS, PMSV, and ATIS.

7.6.4. **VFR Arrival:**

7.6.4.1. Be sure you can maintain VFR to your destination before canceling your clearance with ATC.

7.6.4.2. Approximately 30 nm from the destination, cancel IFR and coordinate with approach control or the tower to proceed to the rectangular pattern or a visual straight-in approach via your own navigation.

7.6.4.3. Be sure to tune and monitor the available NAVAIDs to help maintain position orientation. However, your primary means of navigating to the airport should be via your map and ground references.

7.6.4.4. The controlling agency may issue a clearance for a visual approach after you have the airport in sight or have identified the preceding aircraft. ***NOTE:*** Clearance for a visual approach is for a straight-in approach only; it is not clearance for an overhead or rectangular pattern unless otherwise requested and approved.

7.6.4.5. Contact the controlling agency (approach control or the tower) prior to entering Class B, C, or D airspace and report your position.

7.6.4.6. If flying an overhead pattern, plan on a 3- to 5-mile initial.

7.6.5. **Landing.** Use extra caution when landing at strange fields. **Figure 7.2.** displays one effect of landing on a runway wider than you are used to—a tendency to round out high on the wider runway because of its visual appearance. Use all available references to determine height above the runway. See AFMAN 11-217, Volume 1, for additional information on visual illusions.

7.6.6. **After Landing.** When landing at a strange field, consult TO-1T-1A-1; TO-1T-1A-1CL-1, *Pilot's Abbreviated Flight Crew Checklist, T-1A Aircraft*; and your IFG for information and requirements concerning postflight inspection, transient alert, servicing requirements, aircraft security, and transient maintenance.

Figure 7.2. Visual Effect of a Wide Runway.

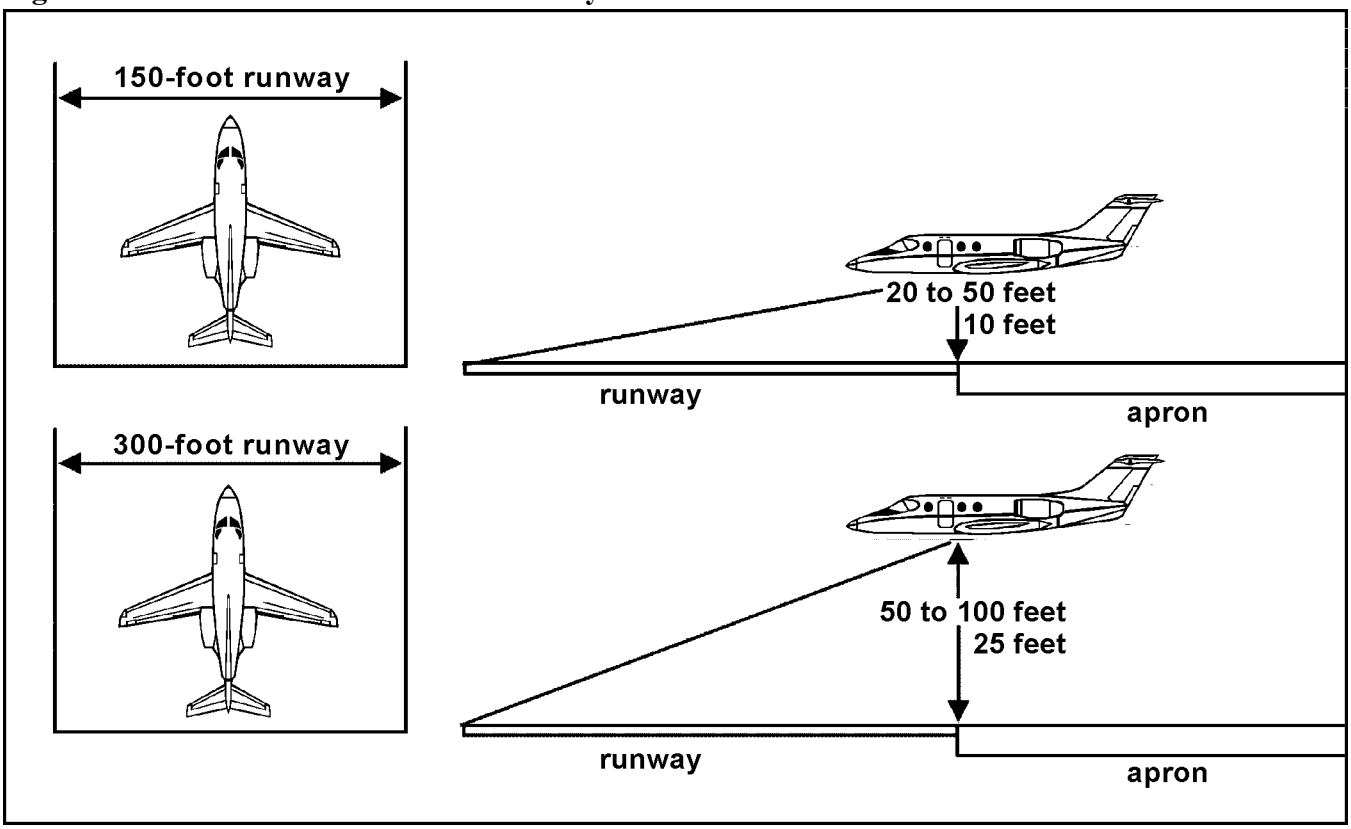

Chapter 8

FORMATION

8.1. Overview:

8.1.1. Formation, more than any other type of flying, provides the best environment for building confidence, discipline, and the proper application of aggressiveness in military flying. Aggressiveness is a state of mind and an attitude not to be confused with speed of flight, control movements, or reckless abandon. Aggressiveness is recognizing deviations and making expeditious, controlled corrections within the rules and parameters. This becomes especially evident when performing air refueling formation maneuvers. Many of our operational missions require flying in some type of formation. You will be required to perform the duties and responsibilities of both lead and wingman position. Both require concentration, air discipline, and effort.

8.1.2. The effectiveness of a formation mission is highly dependent on solid flight discipline. This discipline begins in mission preparation, transitions to the flight briefing, continues in ground operations and area work, and ends at the debriefing. Uncompromised flight discipline is absolutely essential for successful mission execution.

8.2. Responsibilities:

8.2.1. **Collision Avoidance.** Aircrew members must take whatever action is necessary to avoid in-flight collisions. Therefore, the ultimate responsibility for safe flight must rest with each aircrew member including the jumpseat pilot.

8.2.2. **Clearing.** All crewmembers of a formation flight will:

8.2.2.1. Continually clear to the maximum extent possible.

8.2.2.2. When on the wing, devote primary attention to maintaining proper position and clearing through lead.

8.2.2.3. Inform the flight of a hazard by transmitting the call sign, threat direction or clock position, and elevation (low, level, or high). For example, transmit "Panther flight, traffic, 9 o'clock high."

8.2.3. **Lead:**

8.2.3.1. Clearing and planning are important aspects of leading a formation. Lead must know the capabilities of the wingman and smoothly perform all maneuvers within those capabilities. However, lead should never become so concerned with smoothness that aircraft control or safety is compromised.

8.2.3.2. If the wingman calls "blind," lead will acknowledge the call, maintain a predicable flightpath, and be directive to ensure altitude separation.

8.2.4. **Wingman.** Each wingman will:

8.2.4.1. In visual formation, keep lead in sight at all times. If the crew loses sight of lead, the wingman will maneuver the aircraft away from lead's last known position and call "blind" with *"(altitude)."* Follow lead's directions to ensure altitude separation. If in IMC, initiate lost wingman procedures.

8.2.4.2. Attempt to maintain a precise position. Anticipate corrections and think ahead of the aircraft. Use CRM to manage the workload. This will allow the PF to continually monitor relative position. Trust the lead and follow directions. As the wingman, remain aware of flight conditions to the maximum extent practical.

8.3. Briefing:

8.3.1. The formation commander will ensure a complete briefing is conducted prior to any formation mission. The flight lead is responsible for the mission data and conduct of the formation briefing.

8.3.2. If available, an alternate mission should be planned for all formation flights.

8.3.3. The crew will check the weather for departure, en route, area, low-level route, and arrival. In addition, they will also brief and be prepared to execute weather avoidance procedures.

8.3.4. The formation commander will ensure notice-to-airmen (NOTAM) information and local restrictions are completely discussed during the brief. This brief must include any applicable limitations or restrictions.

8.3.5. Each crewmember should know the location of both aircraft on the flight line. Unless a prebriefed marshaling area is to be used, both aircraft should plan to leave the parking area at the same time except for air refueling missions.

8.4. Radio Procedures:

8.4.1. Good radio discipline is essential for effective formation operations. Aircrews should minimize radio calls to reduce frequency congestion. Aircrews must ensure calls are clear and concise, combining calls when practical. However, they should not allow a desire for good radio terminology to interfere with flight safety.

8.4.2. The flight lead is responsible for all communications relative to the formation. He or she will direct all frequency changes and check in with the wingman on all newly assigned frequencies.

8.4.3. The wingman will make the frequency change and check in as directed by the lead.

8.4.4. Lead should never give a frequency change when the wingman is saturated with trying to fly the aircraft (for example, during a breakout). If a frequency change must take place at an inopportune time, lead will give the wingman time to make the change and respond. Lead should minimize maneuvering until the formation has checked in on the same frequency.

8.4.5. As a general rule, the wingman will acknowledge lead's verbal directions with an appropriate radio call.

8.4.6. All communications between the aircraft in a flight (except radio frequency changes) should be conducted on a prebriefed interplane frequency, not on an ATC frequency. In a critical situation, use any frequency, including ATC or guard. When addressing any outside agency such as ATC, use the formation's full tactical call sign ("Panther 21 flight"). When communicating between airplanes on interplane, the formation may use abbreviated call signs such as ("Panther flight, lead or 2").

8.5. Visual Signals. Visual signals are very limited in T-1A formation flying and are not normally used. Any visual signals to be used will be briefed by flight lead. Crewmembers should be familiar with AFI

11-205, *Aircraft Cockpit and Formation Flight Signals,* for formation visual signals that could be used in the case of an emergency.

8.6. In-Flight Checks. Each aircraft in the formation is responsible for completing the required in-flight checks and informing lead if there is a problem. Bingo is a prebriefed fuel state or time, which will be used to terminate maneuvering and start a return to base (RTB). The wingman will notify lead when this fuel state is reached with the radio call, "Panther 2 is bingo." Lead will acknowledge all bingo calls.

8.7. Lost Wingman Procedures. In any lost wingman situation, immediate separation of the aircraft is essential. Upon losing sight of lead, the wingman will notify him or her and execute the applicable lost wingman procedure. Bank angles used during lost wingman should not exceed 30 degrees. ATC can help ensure positive separation. Use the air-to-air (A/A) TACAN and TCAS as backup.

8.7.1. **Lead Responsibilities.** The flight lead should acknowledge the lost wingman's radio call. Lead should also transmit attitude, heading, altitude, airspeed, or any other significant information to help the wingman maintain safe operations.

8.7.2. **Wingman Responsibilities.** The procedures to be used depend on the flight position at the time sight is lost. Obtain a separate clearance if a rejoin is not possible.

8.7.2.1. **Wings Level.** Turn 45 degrees away for 10 seconds and then turn back to the original heading. Use 30 degrees of bank during the turn and start timing after established on a heading 45 degrees away from lead (**Figure 8.1.**).

Figure 8.1. Lost Wingman.

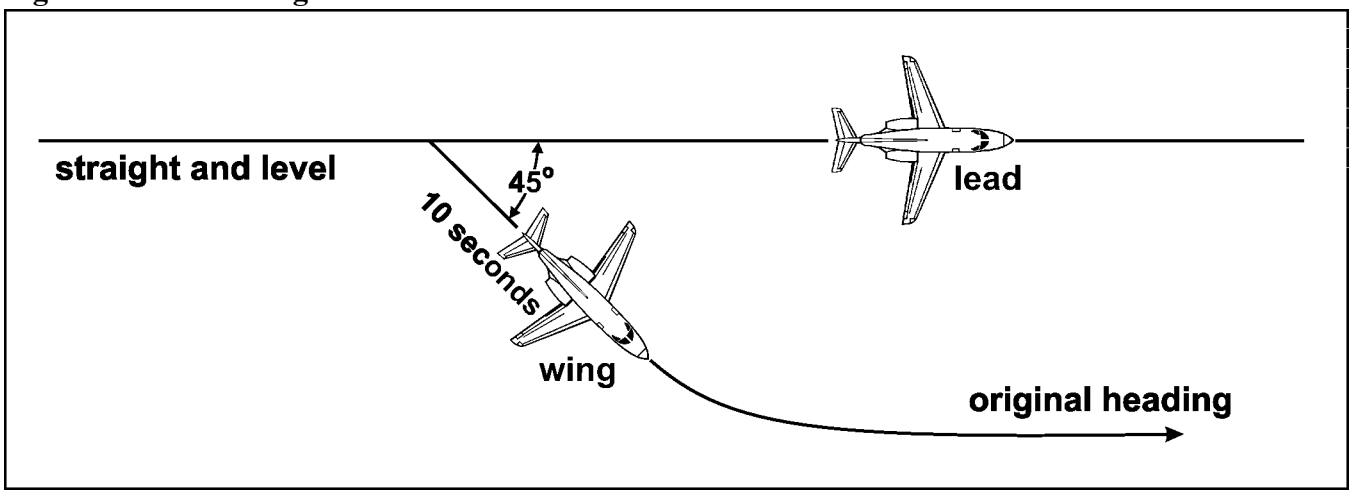

8.7.2.2. **Climbing or Descending.** When wings level or turning, level off with a minimum of 1,000 feet separation, inform lead of your present condition, and resume course.

8.7.2.3. **Turns.** When outside of the turn, roll wings level, inform lead, and continue straight ahead to ensure separation. If you are on the inside of the turn, maintain the turn and instruct lead to roll out. Lead may resume the turn only after adequate separation is assured. If the flight is either climbing or descending in a turn, level off to achieve additional separation.

8.7.2.4. **Low Level.** Ensure separation initially by following visual lost wingman procedures described above (terrain permitting). Lead should climb on the route center line and be directive as to base altitude and heading. Normally, he or she will initially climb at 250 KIAS up to a minimum

of emergency route abort altitude (ERAA) while the wingman climbs at 220 KIAS up to a minimum of ERAA plus 1,000 feet. The wingman may request rejoin if lead is visually acquired prior to the next turn point.

8.7.3. **Cell Formation Maneuvering.** In level flight (wings level or turning), climb 1,000 feet above lead's altitude. If the flight is descending, level off and maintain a position at least 1,000 feet above lead's altitude. If the flight is climbing, level off and maintain a position at least 1,000 feet below lead's altitude (**Figure 8.2.**). Regardless of the situation, inform lead of the lost wingman condition. ***CAUTION:*** Maintain prebriefed airspeed to prevent overrunning lead.

Figure 8.2. Cell Formation Lost Wingman.

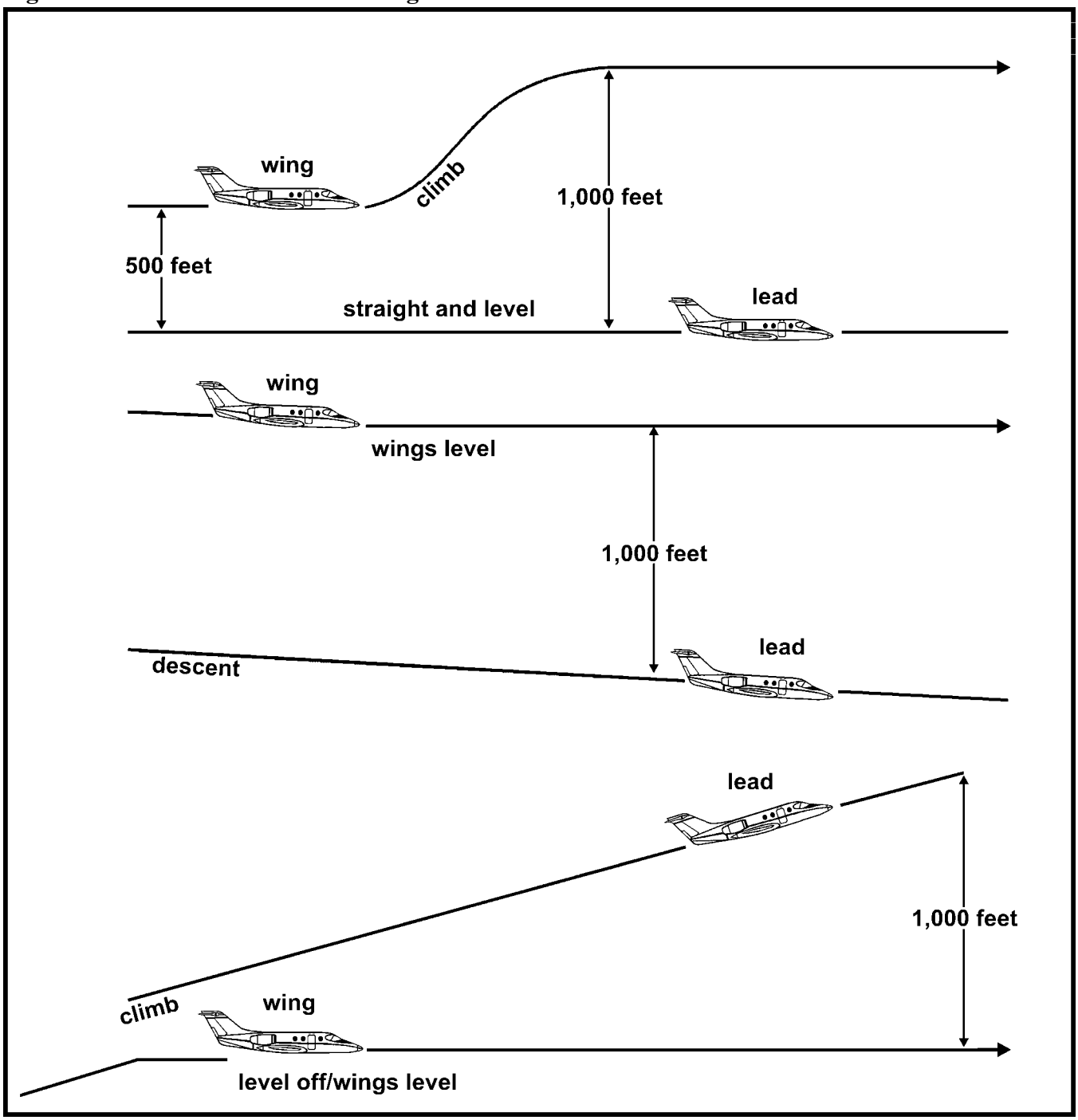

8.7.4. **Rejoin.** A rejoin may be performed once visual contact has been regained. Lead will direct the wingman to the appropriate position. This position may be the visual position or cell position.

8.7.5. **Practice Lost Wingman.** Lost wingman procedures are practiced to prepare for actual situations that may be encountered. Lead will direct practice of lost wingman procedures with the radio call, "Panther flight, go practice lost wingman." The wingman will execute the appropriate procedures to include a radio call; for example, "Panther 2 is practice lost wingman, lead roll out." After the pro-

cedure has been executed and lead grants permission for a rejoin, he or she will specify the type and direction of the rejoin.

WARNING

Lost wingman procedures may not guarantee obstacle clearance. It is the responsibility of all the pilots in the formation to be aware of terrain and obstacles along their flightpath. They must use good judgment when executing lost wingman procedures.

8.7.6. **IMC Separation:**

8.7.6.1. IMC weather conditions require the formation to separate into single ships with individual clearances prior to encountering IMC. Normally, lead will coordinate with ATC for two separate clearances and then initiate the separation with a radio call. The wingman must comply with lead's direction and contact ATC (**Figure 8.3.**).

Figure 8.3. Establishing IFR Separation.

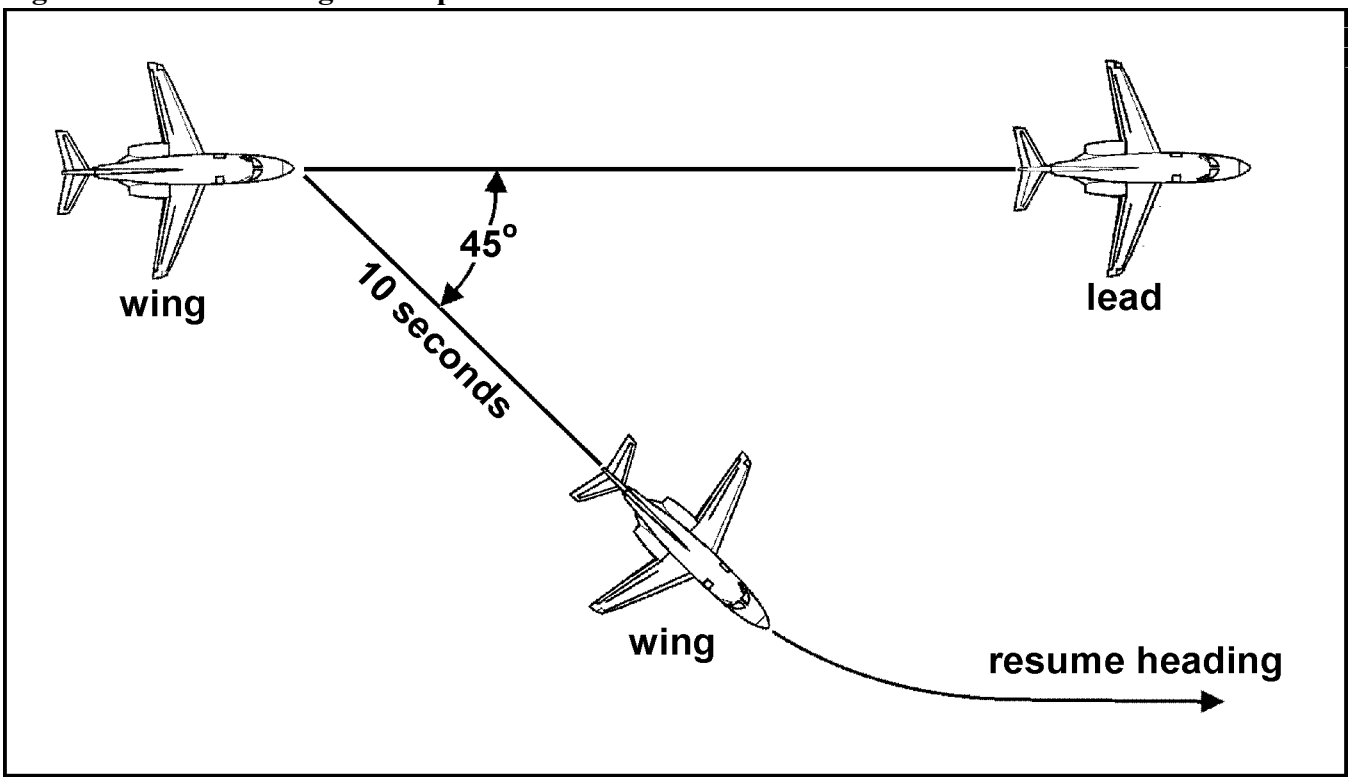

8.7.6.2. If VMC is regained and both aircraft are in sight of each other, lead must coordinate with the controlling agency and wingman for an appropriate rejoin. If the flight is unable to regain VMC, each aircraft should maintain separate clearances, discontinue the formation mission, and execute the prebriefed alternate mission or coordinate for separate arrivals into the destination field.

8.8. A/A TACAN. The A/A TACAN operates the same as the air-to-ground TACAN. Selected A/A TACAN channels must be 63 channels apart. Use Y channels to avoid possible interference with ground-based stations. A/A and transmit/receive (T/R) must be selected to receive distance information. Selecting INV mode will give you bearing information.

8.9. Ground Operations. Coordinate formation taxi requirements with ground personnel prior to engine start.

8.9.1. **Check-In.** A radio check-in will be initiated by lead on the prebriefed interplane frequency. The flight should not leave the chocks until positive radio contact has been established on at least one frequency. Inform the other aircraft of any maintenance delays or the need to abort.

8.9.2. **Taxi.** When taxiing, maintain a minimum of 150 feet (approximately three ship lengths) of spacing. It is the wingman's responsibility to maintain a proper taxi *interval*; it is lead's responsibility to maintain a proper taxi *speed*.

8.9.3. **Taxi Abort.** Inform the other aircraft of your problem and intentions; for example, abort the mission or continue the mission after repair. The other aircraft may elect to abort or continue with an alternate mission. Coordinate your intentions with the other aircraft and ground control for the routing needed to back-taxi or arrange for a tow if taxi is not warranted. As applicable, coordinate the problem and your intentions with the SOF and SUP.

8.9.4. **Runway Lineup:**

8.9.4.1. A formation requires a minimum of a 150-feet-wide runway for both aircraft to take the runway at the same time. Lead will stop with sufficient distance to allow the wingman to maneuver into position. The wingman will be positioned on the upwind side for takeoff when the crosswind component exceeds 10 knots. Each aircraft will be centered on its respective side of the runway (**Figure 8.4.**).

Figure 8.4. Runway Lineup.

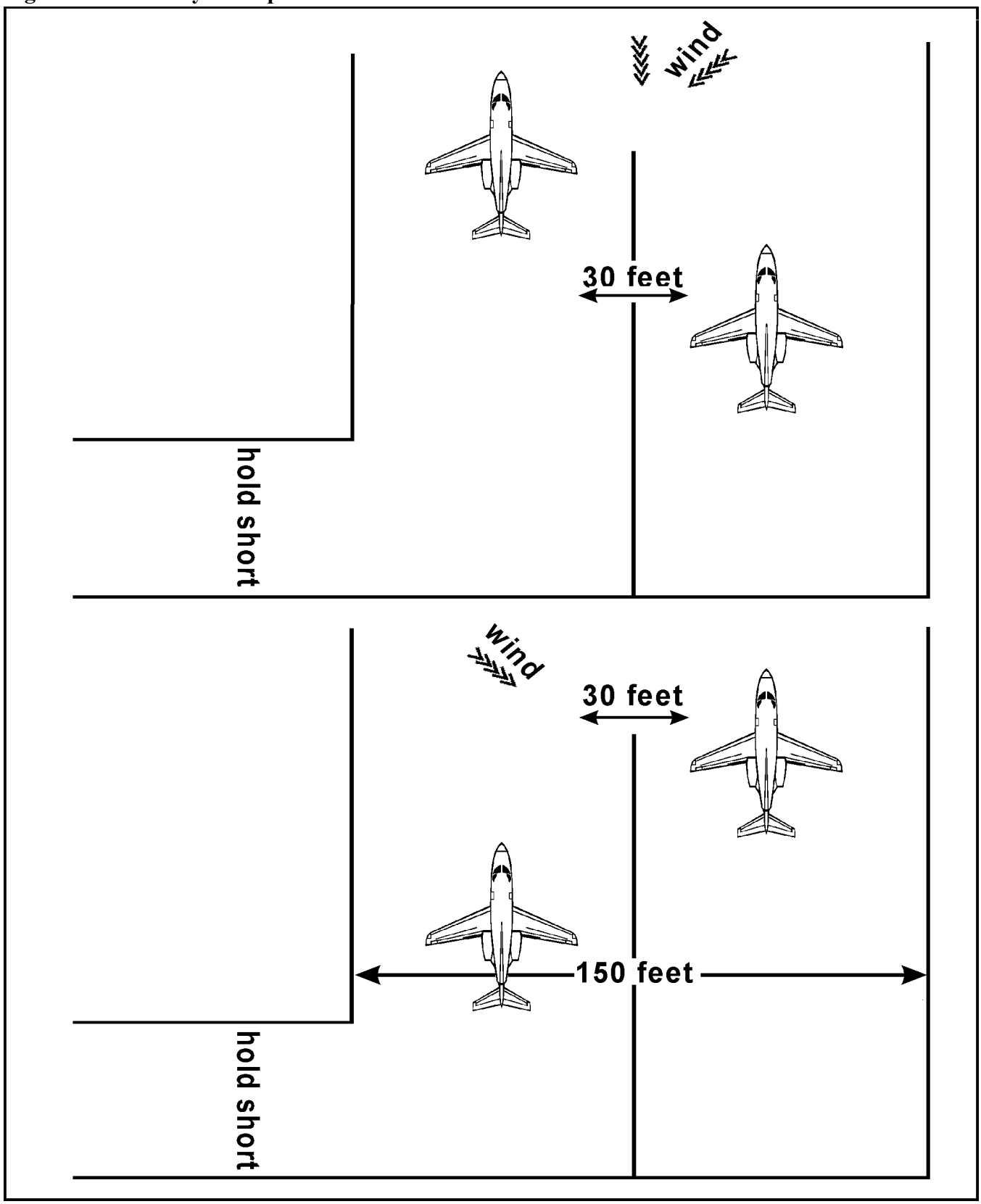

8.9.4.2. The wingman will align the nose of the aircraft with the tail of lead's aircraft and provide at least 30 feet of wingtip lateral clearance from lead.

8.9.4.3. If the runway is not 150 feet wide, use the feed-on procedure for takeoff as described in paragraph **8.10.2.**

8.10. Takeoffs:

8.10.1. **Normal:**

8.10.1.1. **Fifteen-Second Interval.** Once the flight is positioned on the runway and cleared for takeoff, lead will call for the runup ("Panther flight, run 'em up") to 80 percent N_1 for the engine checks. When number two calls, "Panther 2 is ready," lead will release brakes and advance power. When lead releases the brakes, the wingman will hack the clock and continue holding the brakes. At 15 seconds the wingman will release the brakes and advance power.

8.10.1.2. **One-Minute Interval.** Once the flight is positioned on the runway and cleared for takeoff, lead will call for the runup ("Panther flight, run 'em up") to 80 percent N_1 for the engine checks. When number two calls, "Panther 2 is ready," lead will release brakes and advance power. When lead releases the brakes, the wingman will hack the clock and reduce the power to idle. At approximately 45 seconds, the wingman will advance power to 80 percent N_1, check engines, and release brakes at one minute.

8.10.1.3. Both aircraft must maintain their side of the runway.

8.10.2. **Feed-On Takeoff (Rolling):**

8.10.2.1. Lead will coordinate the clearance for the feed-on formation takeoff. When cleared, he or she will take position on the appropriate side of the runway (**Figure 8.4.**) and perform a rolling takeoff.

8.10.2.2. The wingman will hack the clock when lead crosses the hold line or upon lead's brake release if performing a static takeoff. When the 15-second separation time has elapsed, the wingman will take the opposite side of the runway and perform a rolling takeoff.

8.10.2.3. Both aircraft must use caution on the takeoff roll because all engine instruments must be checked while performing a rolling takeoff.

8.10.3. **IMC.** If the formation takeoff is to be performed into IMC, use the procedures in paragraph **8.10.1.2.** Depending on weather conditions, the wingman may have to take off with a separate IFR clearance and join up with lead on top.

8.10.4. **Takeoff Aborts:**

8.10.4.1. If an abort is required during any formation takeoff, maintain aircraft control and remain on your side of the runway to ensure safe spacing. Call as soon as practical to the tower and other aircraft to make known your intentions, but do not sacrifice aircraft control to make radio calls.

8.10.4.2. For a lead abort, maintain your side of the runway and determine whether to stop or clear the runway. If you are clearing the runway, do not cross the wingman's side until you verify there is no threat of collision. For a malfunction at or above S_1, continue the takeoff and apply the appropriate airborne emergency procedures. When able, advise the wingman of your intentions.

8.10.4.3. If lead has to abort, the wingman should not start the takeoff roll. Once lead has cleared the runway, the wingman may return to parking or take off for the alternate mission. If the wingman aborts, lead will return for landing or continues with an alternate mission.

8.10.4.4. If lead aborts and the wingman has started the takeoff roll, both aircraft will abort and maintain their respective runway side.

8.11. Departure and Climbout:

8.11.1. VMC (15-Second Interval):

8.11.1.1. Lead is responsible for flying a normal SID, radar, or VFR departure and coordinating the formation requirements with departure control. Lead will reduce power to MCT minus 5 percent N_1 after passing 400 or 1,500 feet AGL (based on climb profile) and fly the prebriefed airspeed, normally 220 KIAS.

8.11.1.2. The wingman will fly a normal departure, using the power advantage to close the visual position. The wingman will call, "Panther 2's in" after joinup. This signals to lead that power adjustments may be made as necessary to maintain the proper climb schedule. MCT minus 2 percent is normally appropriate. Lead may then clear the wingman to the offset position.

8.11.2. IMC (1-Minute Interval):

8.11.2.1. Lead will fly a normal instrument departure and initiate a rejoin once both aircraft are above the weather with visual contact (after military assumes responsibility for separation of aircraft [MARSA] has been declared and ATC has approved). The departure will be flown at the prebriefed airspeed and power setting.

8.11.2.2. The wingman will fly a normal instrument departure and prepare to rejoin once both aircraft are above the weather and lead is in sight. The wingman may only begin the rejoin maneuver after directed by lead. The A/A TACAN and TCAS should be used to help locate lead and determine the rejoin distance. Assistance may also be available through radar vectors from a ground radar facility. The wingman will remain at least 1,000 feet below lead's altitude until positive visual contact has been established.

8.11.2.3. Both aircraft will monitor the weather radar throughout the departure for weather avoidance information.

8.11.3. Cell Departure (VMC):

8.11.3.1. Lead is responsible for flying a normal SID, radar, or VFR departure and coordinating the nonstandard formation requirements with departure control. Reduce power to MCT minus 5 percent N_1 or the prebriefed power setting after passing 400 feet AGL and fly the prebriefed departure airspeed. Lead is responsible for maintaining the climb schedule, navigating, leveling off at cruise altitude, and ensuring the completion of the appropriate checklists.

8.11.3.2. The cell departure position is defined as 1 nm in trail and 500 feet below lead's altitude. The wingman will fly a normal departure, using the power advantage to close the cell departure position. The wingman will call, "Panther 2's in" once the joinup has been completed. This signals lead that power adjustments can be made as necessary to maintain the proper climb schedule. MCT minus 2 percent as a technique may be appropriate. On reaching the final leveloff altitude, the wingman will transition the normal cell position 500 feet above lead and 1 nm in trail.

8.11.3.3. Both aircraft are individually responsible for completing all in-flight checks.

8.11.3.4. In the event of lost sight, the wingman will notify lead and maintain position.

8.11.3.5. In the event of lost wingman, the wingman will notify lead, maintain 1 nm separation, and ensure 1,000 feet separation at leveloff until visual contact is established.

8.12. Visual Formation:

8.12.1. **Visual Position:**

Figure 8.5. Visual Formation Position.

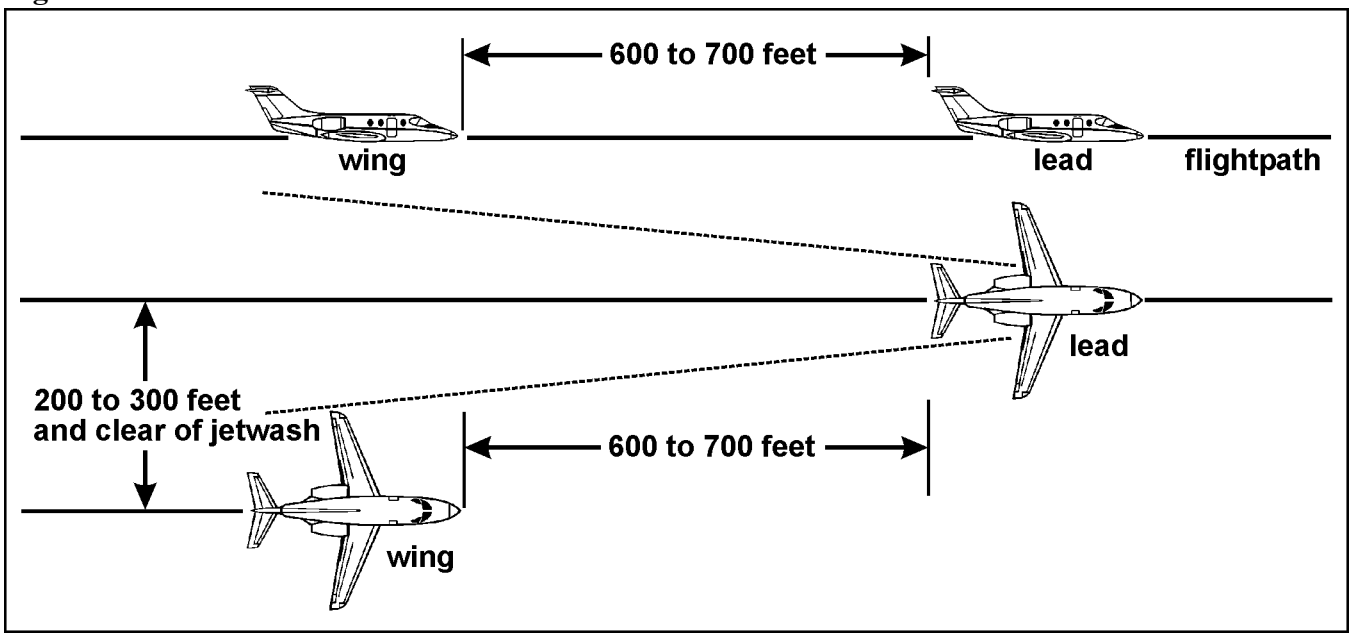

8.12.1.1. The basic visual formation position for the wingman is approximately 600 to 700 feet behind and 200 to 300 feet to the right, out of lead's jetwash (**Figure 8.5.**). To maintain the proper position use the following visual references, the wingman should:

8.12.1.1.1. Be close enough to easily read the letters on the tail, but just barely make out the tail numbers.

8.12.1.1.2. Superimpose the right engine intake on lead's emergency exit hatch. The stinger light should be seen in the tail cone of the left engine. The bottom of the left engine should rest tangent on the left wing.

8.12.1.1.3. As a *backup,* use approximately .2 DME.

8.12.1.2. Lead may direct the wingman to be on the left side as required. The wingman will maintain the side assigned by lead.

8.12.2. **Offset Position.** The offset position for the wingman is 600 to 4,000 feet (approximately .2 to .8 DME) of spacing (**Figure 8.6.**). This allows the wingman to use visual references to determine the inner limit of the offset position. The wingman may fly on either side of lead, from the in-trail position

up to line abreast. The offset position is fluid in nature, but the optimum position is in a 30- to 45-degree cone on either side of lead. The wingman may maneuver from side to side or farther back to optimize clearing. The wingman's position is chosen to optimize clearing, avoid terrain and obstacles, and/or position for the next turn or a prebriefed threat.

Figure 8.6. Offset Position.

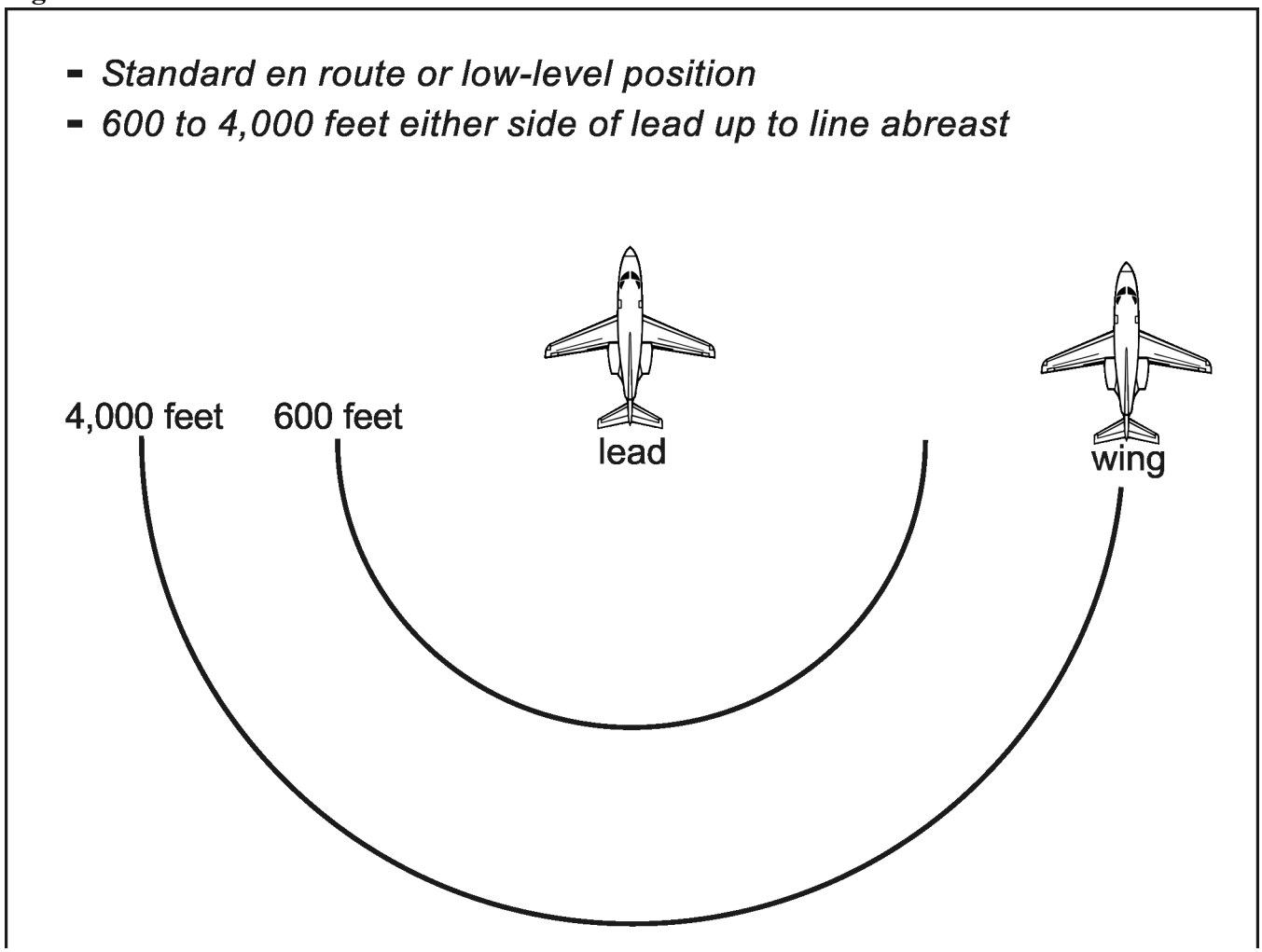

8.12.3. **Turns:**

8.12.3.1. **Lead.** Bank angle is normally 30 degrees, but must not exceed 45 degrees.

8.12.3.2. **Wingman Visual Position.** The wingman should stack level en route and slightly high of lead during turns to avoid jetwash (**Figure 8.7.**).

Figure 8.7. Visual Position Turns.

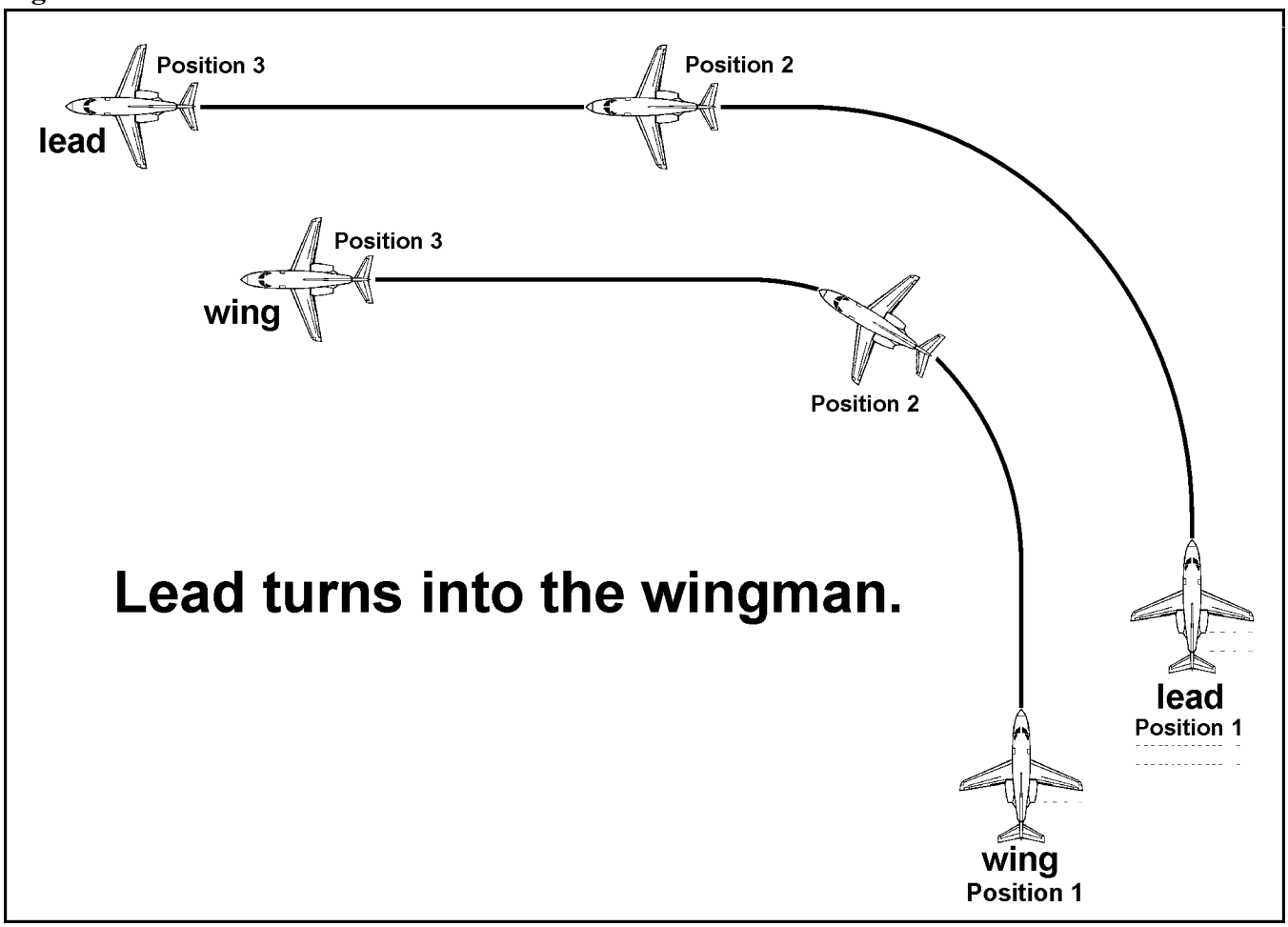

8.12.3.3. **Wingman Offset Position.** Follow lead while maintaining a 30- to 45-degree aspect wedge position (**Figure 8.8.**). The visual reference for 45 degrees is placing lead's wingtip on his or her nose. Putting lead's stall fence (halfway down the wing) on lead's nose is the reference for 30 degrees. Anticipate lead's turns to avoid obstructing formation maneuvering. This may involve collapsing toward lead's 6-o'clock position or switching sides to maintain the proper spacing. Ensure slight vertical spacing to avoid flying through lead's jetwash when crossing from one side to the other.

Figure 8.8. Offset Turns.

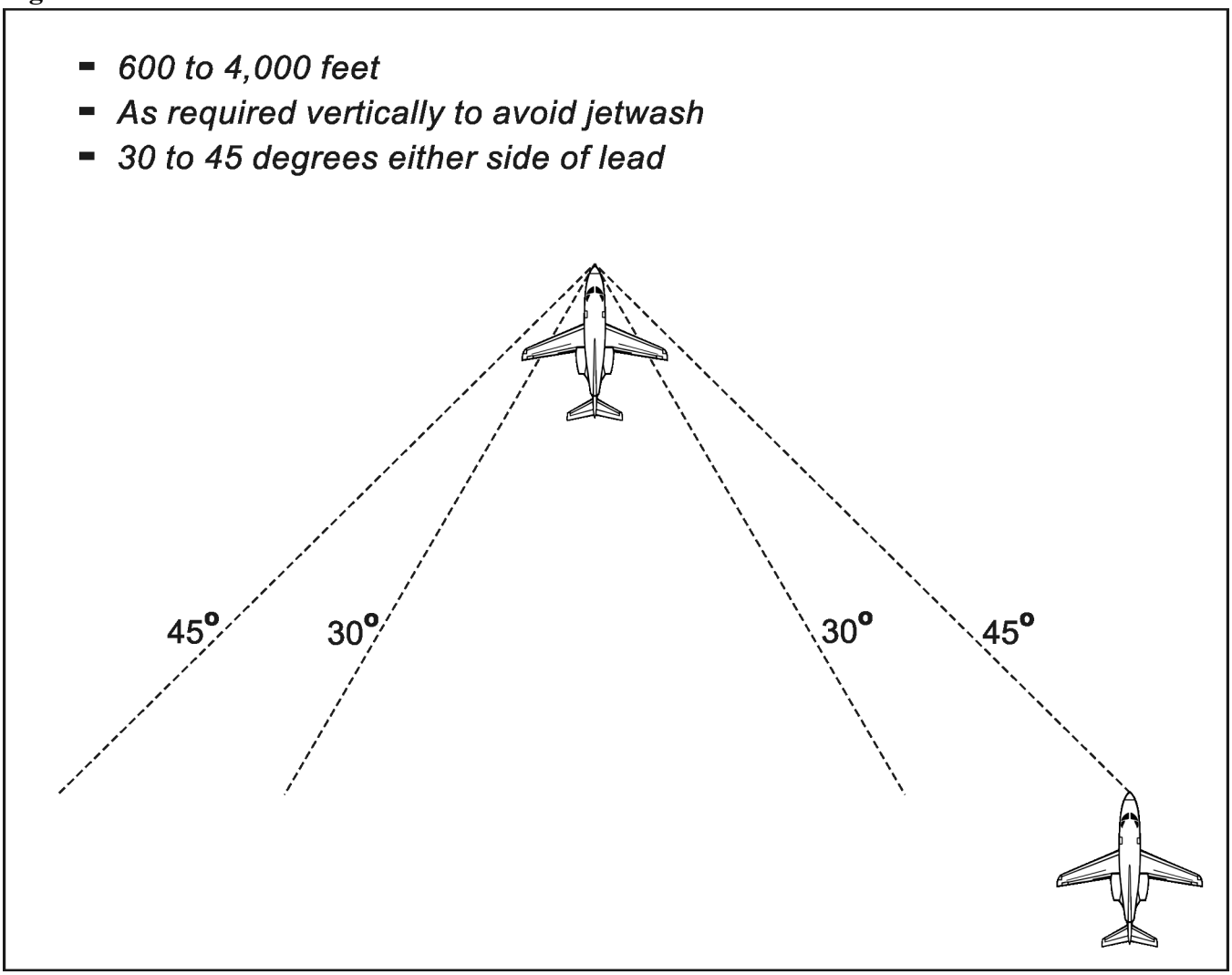

8.12.4. **Area Maneuvers.** Area maneuvers will be used to build on your knowledge of three-dimensional flying.

8.12.5. **Low Level.** The wingman should fly no lower than lead.

8.12.6. **Offset Maneuvering Exercise:**

8.12.6.1. The offset maneuvering position for the wingman is 600 to 4,000 feet (approximately .2 to .8 DME) of spacing, either side of lead up to line abreast.

8.12.6.2. Lead will initiate by transmitting, "Panther 2, go offset maneuvering." Wing will acknowledge with "2."

8.12.6.3. After the wingman is established in position and sets 80 percent N_1, the wingman will call "Panther 2's in." Lead will set power at 80 percent N_1 and begin a series of predictable turns

with no more than 45 degrees of bank and ± 20 degrees of pitch. Lead's airspeed is limited to no lower than 180 KIAS and no higher than 260 KIAS. Lead should try to keep the aircraft's nose tracking by maintaining back pressure on the control yoke. The wingman should strive to maintain the 30- to 45-degree cone by using lead and lag pursuit.

8.12.6.4. The wingman will demonstrate the ability to maneuver in the offset position and stabilize the aircraft at various points within the cone. The objective is not to maintain one constant position. The wingman should consider turning ignition switches on during this maneuver.

8.12.7. **Take Spacing:**

8.12.7.1. To set up the flight for practice rejoins, lead must consider several factors that directly affect how the rejoin is done. The size and orientation of a working area or stereo route can dictate the type of rejoin. Lead must consider cloud positions or the possibility of encountering areas of poor visibility including the position of the sun. A final consideration is the position of the wingman relative to the next planned maneuver.

8.12.7.2. Lead will direct which type of maneuver will be flown to obtain the required spacing, taking into account the factors listed in paragraph **8.12.7.1.** Lead may maintain heading and have the wingman "S" turn, or lead may accelerate while the wingman decelerates. If lead directs a "pitchout," he or she will turn away 180 degrees to allow the wingman to use the turn for spacing. If lead turns away, the wingman will delay 8 to 10 seconds or lead approximately thee quarters of the way through the turn before initiating a turn. The wingman will assist lead in clearing the area throughout the maneuver.

8.12.7.3. Lead must ensure the working area or route is clear of traffic and conditions are safe for a rejoin. Once the wingman obtains spacing, lead will call for a rejoin. For example, lead will call, "Panther flight, rejoin straight ahead" or "Panther flight, rejoin left turn."

8.12.7.4. The wingman must keep lead in sight and maneuver to arrive at a position slightly offset from lead's 6 o'clock at approximately 1 nm in trail while analyzing the area and anticipating the direction and type of rejoin.

8.12.8. **Straight-Ahead Rejoin:**

8.12.8.1. **Lead.** As lead, maintain a stable platform, clear the area, and call for the rejoin. Maintain the prebriefed rejoin airspeed, usually 220 KIAS. If an airspeed other than the prebriefed speed is required, announce the speed and wait for an acknowledgment before changing speed. If at anytime during the rejoin you feel an unsafe situation is developing, immediately take positive action to prevent a midair collision.

8.12.8.2. **Wingman**. As wingman, maneuver to a position directly behind and slightly below lead. Then accelerate to the desired overtake speed (approximately 30 to 40 knots of overtake) and monitor that speed during the rejoin. Fly directly toward lead's 6-o'clock position until approximately 0.4 DME. Then turn slightly away from lead, aiming for the visual formation position on the side directed by lead. This will give you a vector away from lead in case an overshoot occurs. As references on lead's aircraft become visible, gradually decrease the closure rate to arrive at the visual formation position. Be prepared to use idle power and speed brakes, if required. However, do not rely on the speed brake to quickly decrease closure.

8.12.9. **Turning Rejoin:**

8.12.9.1. **Lead.** As lead, maintain a stable platform, clear the area, and direct the rejoin. Maintain the prebriefed airspeed and bank angle. Monitor the wingman to determine the rejoin angle and rate of closure. Be ready to take evasive action, if required.

8.12.9.2. **Wingman:**

8.12.9.2.1. After lead directs a rejoin, you, as the wingman, will match lead's bank to move inside the turn and get established on the 30-degree rejoin line. Adjust the bank angle to maintain this position, avoiding either the tail chase position or flying ahead of the rejoin line. Keep cross-checking the airspeed and closure rate throughout the maneuver. Initially place lead above the horizon to establish the vertical separation. Use a combination of cutoff and airspeed to expedite the rejoin while keeping lead in the same relative position on the windscreen. As a guide, use approximately 20 KIAS of overtake to complete the rejoin. When approaching the visual formation position, move from the 30-degree rejoin line and reduce the overtake airspeed. Complete the rejoin by further adjusting the power and bank angle to maintain the visual formation position.

8.12.9.2.2. If you lose sight of lead, inform him or her, break out, and establish an altitude differential of 1,000 feet until visual contact is obtained. Use the A/A TACAN and TCAS or ask a ground radar facility to assist.

8.12.10. **Knock-It-Off:** (***NOTE:*** Refer to AFI 11-214, *Air Operations Rules and Procedures,* for additional information.)

8.12.10.1. Any formation crewmember may call "knock-it-off" to cease maneuvering when safety of flight is a factor or where doubt or confusion exists. Initiation of a knock-it-off call will start with the flight call sign; for example, "Bend 51, knock-it-off." Then both flight members will transmit their position number, in order, in the following format: "Bend 1, knock-it-off," "Bend 2, knock-it-off." If any flight member fails to respond correctly, the sequence should be initiated again.

8.12.10.2. Upon hearing a knock-it-off call, all participating aircraft will clear their flightpath, cease maneuvering, climb or descend to a prebriefed safe altitude, and acknowledge with their call sign. Lead will maintain a predictable flightpath and will be directive before resuming maneuvering. He or she will direct a rejoin once safety of flight is ensured. The wingman will maintain positive aircraft separation and visual contact with lead while waiting for lead's direction.

8.12.11. **Terminate:** (***NOTE:*** Refer to AFI 11-214 for additional information.)

8.12.11.1. Any formation crewmember may call "terminate" to cease maneuvering when safety of flight is not a factor or when desired learning objectives have been achieved. Terminate procedures should be used when the wingman is too far out of position, which would result in ineffective training.

8.12.11.2. Initiation of a terminate call will start with the flight call sign; for example, "Bend 51, terminate." Flight members transmitting their position number, in order, in the following format: "Bend 1, Terminate," "Bend 2, Terminate." If any flight member fails to respond correctly, the sequence should be initiated again.

8.12.11.3. Upon hearing a terminate call, participating aircraft will clear their flightpath, cease maneuvering, and acknowledge with their call sign. Lead will maintain a predictable flightpath

and will be directive before resuming maneuvering. The wingman will maintain positive aircraft separation and visual contact with lead while waiting for lead's direction.

8.13. Cell Formation:

8.13.1. **Lead Responsibilities:**

8.13.1.1. Lead's primary tasks are similar to those in a visual formation. He or she will navigate, clear, and coordinate all communications for the formation.

8.13.1.2. Lead has primary responsibility for keeping the flight clear of adverse weather during formation flight. ***NOTE:*** The wingman should also monitor the weather visually and with the weather radar.

8.13.2. **Wingman Responsibilities:**

8.13.2.1. The wingman is responsible for maintaining a cell position using A/A TACAN. The standard cell position places the wingman 1 nm in trail and 500 feet above lead's altitude (**Figure 8.9.**). Back up lead in navigation by checking position, ground track, airspeed, clearances, communications, and turn points. Be prepared to assume the lead position and responsibilities at any time during the flight. If the wingman loses sight of lead, the wingman will call "blind" with *"(altitude)."* Lead will acknowledge the call, maintain a predictable flightpath, and be directive to ensure altitude separation. If IMC is encountered, the wingman will perform the appropriate lost wingman procedures.

Figure 8.9. Cell Formation Position.

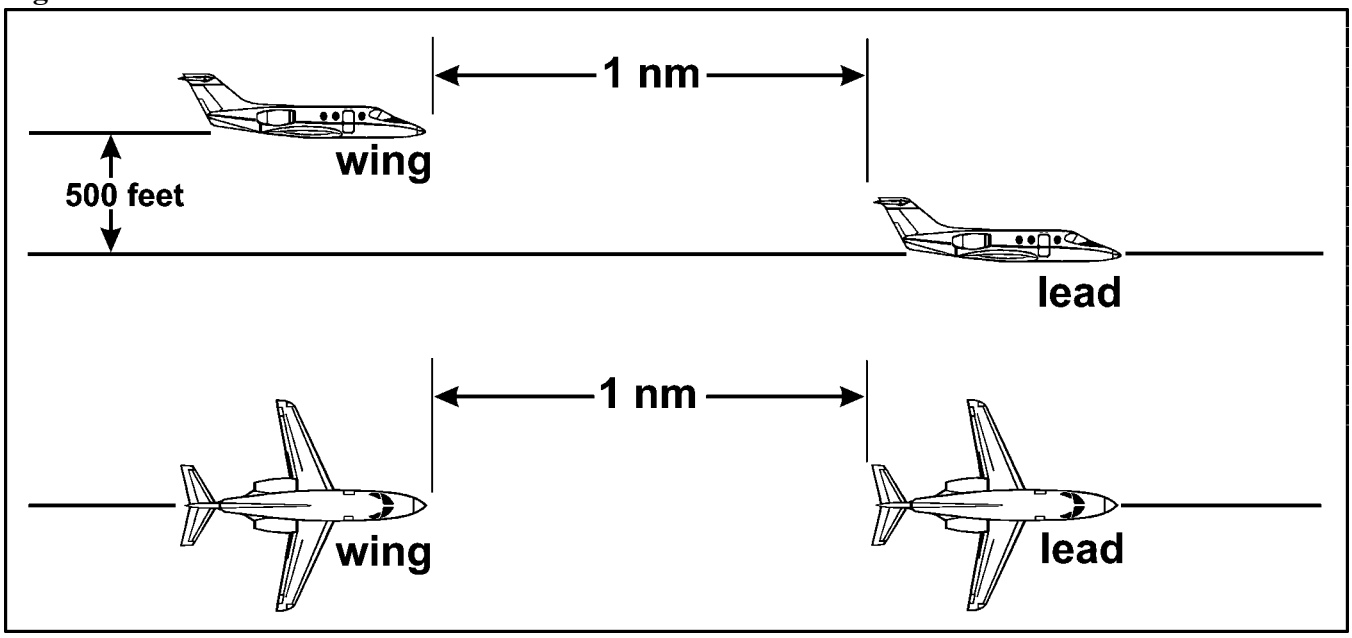

8.13.2.2. Heading changes are performed in the same way as visual formations change heading. Both aircraft will execute the turn at approximately the same point in the air with the wingman maintaining lead's general flightpath. The wingman will use timing (based on true airspeed) to determine when to begin a turn. **Table 8.1.** may be used as a guide for timing estimates in cell formation.

Table 8.1. Wingman Turn Delay for Cell Formation.

ITEM	A	B
	True Airspeed	**Time (Seconds)**
1	150	24
2	200	18
3	250	14
4	300	12
5	400	9
6	450	8

8.13.2.3. The wingman is responsible for completing the rejoin. The wingman can and often will use a combination of electronic and visual procedures to complete the rejoin. Under no circumstances will the wingman fly closer than 1 nm or less than 1,000 feet of altitude separation without a positive visual sighting of lead's aircraft.

8.14. Breakup. Normally, lead coordinates the formation breakup with ATC, requesting the breakup with separate call signs, IFR clearances, and approaches. The flight establishes separate communication frequencies after the breakup. For example, ARTCC may direct lead to turn right to 150 degrees, descend to FL 190, and contact approach control on 123.5. The wingman may be directed to turn left to 360 degrees, maintain FL 230, set the identification friend or foe (IFF) to 3110, and remain on this frequency for further instructions. Each aircraft must monitor the other's position to ensure a proper separation.

8.15. Position Change:

8.15.1. Lead is responsible for determining when to change position, taking fuel, time, and location into consideration. He or she also ensures the flight has adequate lateral and vertical area before initiating a lead change. Lead will normally direct the change over the interplane radio frequency, "Panther flight, position change." When the wingman acknowledges the position change radio call, he or she will normally turn right (away) momentarily, using 30 degrees AOB. The wingman will then return to the base heading while advancing power (**Figure 8.10.**).

Figure 8.10. Position Change.

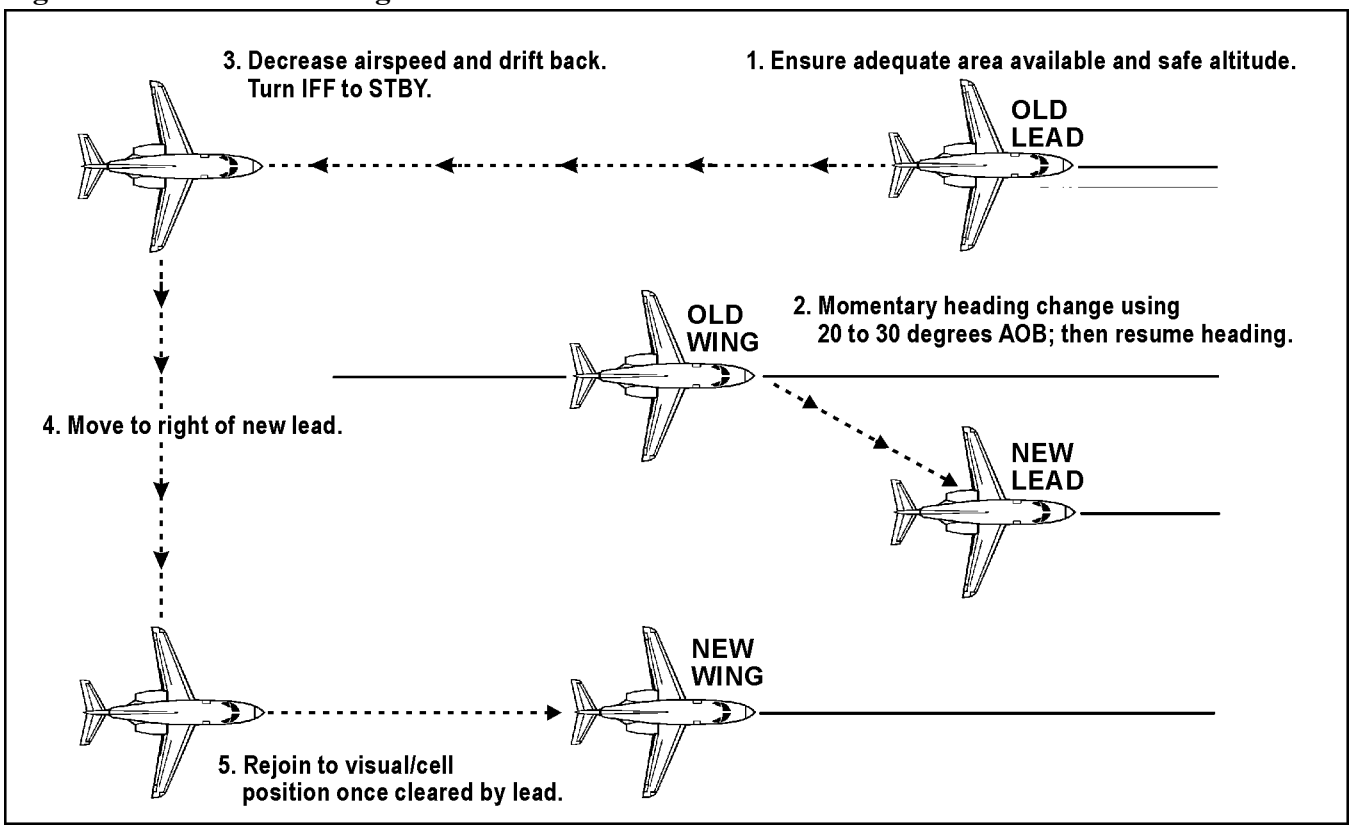

8.15.2. The position change will be complete when the old wingman passes abeam the old lead. The old lead will transmit, "Panther XX, you have the lead on the right (left)." The new lead will respond, "Roger, I have the lead on the right (left)." The new lead (the old wingman) will turn the IFF to ON. The new wingman (the old lead) will turn the IFF to STBY and rejoin as directed by the new lead (the old wingman). It is acceptable for the new wingman (the old lead) to squawk STBY after the first TCAS hit.

8.15.3. The wingman will assume lead responsibilities once passing abeam the old lead and appropriate radio calls have been made. The new wingman (the old lead) will decelerate to expedite the position change, returning to the prebriefed airspeed as the old wingman (the new lead) approaches the proper position. When the wingman acknowledges the lead change call, he or she will pick up the IFF and monitor the new wingman. It is imperative to monitor the old lead (the new wingman) and direct the new wingman to assume either the visual, offset, or cell formation position.

8.16. Breakout:

8.16.1. **Reasons for Breakout.** The wingman will break out of the formation when:

8.16.1.1. Directed by the lead.

8.16.1.2. Crossing under or in front of the lead.

8.16.1.3. His or her presence constitutes a hazard to the formation.

8.16.1.4. Unable to maintain sight of lead.

8.16.2. **Communications.** The aircraft recognizing a need to break out must communicate its intentions and clear in the direction of the breakout. The other aircraft must acknowledge. If lead directs a breakout, the wingman will accomplish a breakout maneuver and acknowledge the call.

8.16.3. **Procedures.** Breakout procedures are dependent on the situation. In all cases, the wingman will maneuver away from lead or lead's last known position and attempt to attain altitude separation. Not all breakouts require aggressive maneuvering. If you are in a turn, simply rolling out wings level and monitoring lead may suffice. If you lose sight, follow lost wingman procedures or briefed lost sight instructions (as applicable).

8.17. Recovery:

8.17.1. Formation Downwind Pattern Entry:

8.17.1.1. Lead will contact approach control or the tower to request a formation downwind entry into the pattern. Depending on the formation's location relative to the field, lead may request either a 45-degree dogleg entry or a direct (straight) entry to the inside downwind (**Figure 8.11.**).

Figure 8.11. Formation Downwind Entry.

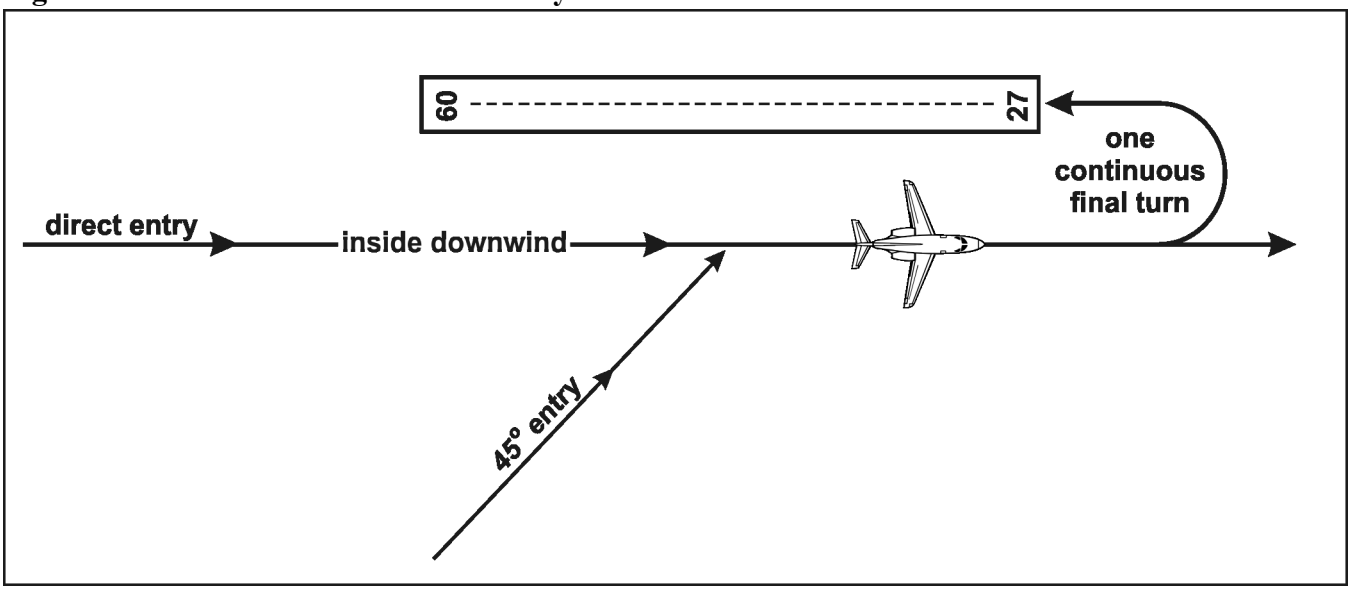

8.17.1.2. Prior to pattern entry, lead will slow to 200 KIAS and maintain pattern altitude. He or she will follow the ground track for the entry flown and maneuver the formation to align with the inside downwind track while maintaining 200 KIAS and pattern altitude. When the formation is aligned on the inside downwind, lead will slow the formation to 160 KIAS.

8.17.1.3. Lead will announce airspeed and configuration changes with a radio call. When abeam the touchdown zone, he or she will configure the aircraft with landing gear, lower 10 degrees of flaps, and slow to V_{app} + 10 KIAS. At the normal overhead pattern turn point (perch), lead will configure with 30 degrees of flaps and roll off the perch. When a minimum of 6,000 feet of threshold spacing will exist, the wingman will confirm final configuration and roll off the perch. As a technique to achieve 6,000 feet of spacing, the wingman should wait until lead is approximately three-quarters of the way through the final turn.

8.17.1.4. Communications with the tower may be expected at the formation downwind entry point, when the formation is aligned with inside downwind, and at all normal VFR pattern call points.

8.17.2. **VFR Tactical Overhead Pattern:**

8.17.2.1. The VFR tactical overhead pattern procedure is the same as that flown in transition with regard to pattern altitude and airspeed. Lead should attempt to fly a good pattern to give the wingman an opportunity to establish proper spacing. However, the wingman is primarily responsible for establishing spacing in the pattern. Spacing is controlled by adjusting the break point. Lead will complete all radio communication procedures until both aircraft are established on inside downwind.

8.17.2.2. Once the formation is separated, use prebriefed breakup call signs (for example, Panther 21 and Panther 22) for radio communications.

8.17.3. **VFR Formation Tactical Overhead Pattern Entry.** The flight will maintain a VFR formation position for pattern entry. At the initial, the wingman will move behind lead and maintain a position behind and just above lead's jetwash.

8.17.3.1. **Pattern Spacing.** Lead will break at the normal break point or as directed by the tower. The wingman will break approximately 8 to 10 seconds after lead and roll out slightly outside lead's downwind ground track (**Figure 8.12.**). The wingman must adjust the break point to build a 6,000-foot threshold spacing from lead (**Figure 8.13.**). Both aircraft should use the same references as a normal VFR landing pattern. The wingman will monitor lead to ensure proper spacing.

Figure 8.12. Pitchout Rollout Interval.

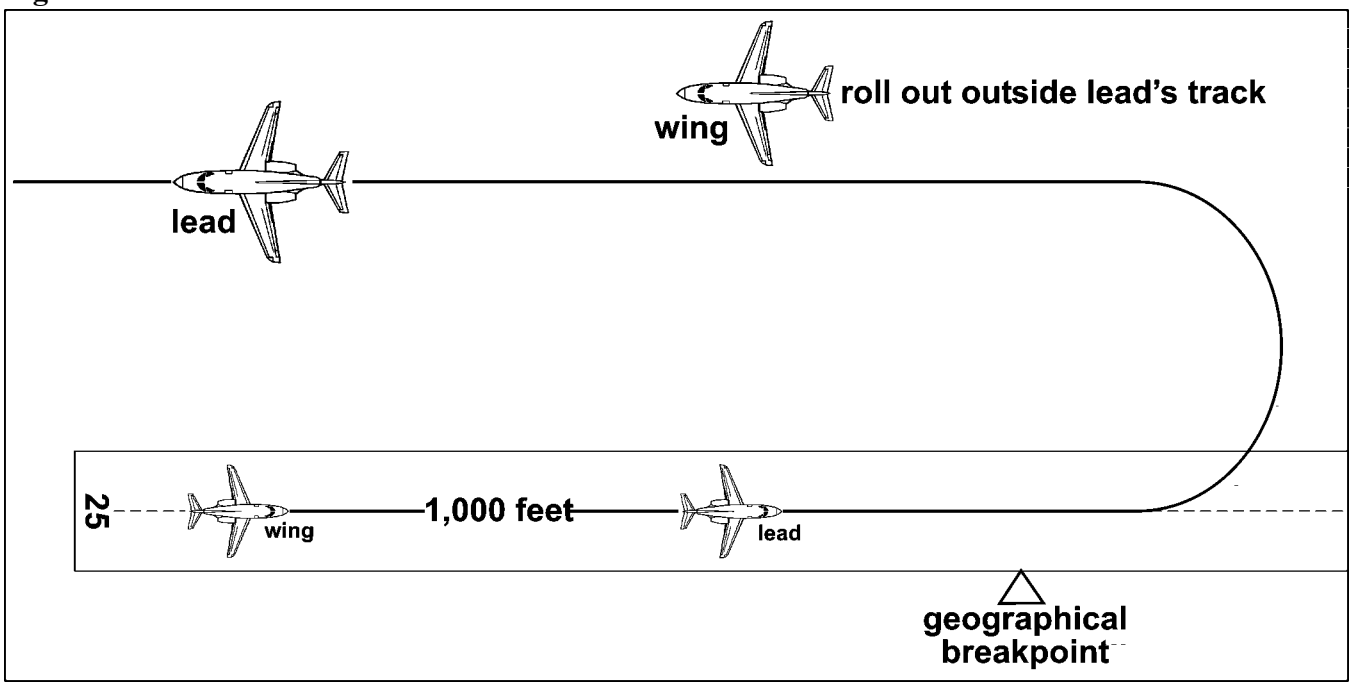

8.17.3.2. **Landing.** Landing procedures are the same for formation as for single ship. The wingman will set the interval on final by adjusting the pitchout point. He or she should fly the final approach and landing while monitoring lead's position to ensure a proper spacing interval has been achieved. If a proper spacing interval has not been maintained, the wingman should execute

a go-around on final. The landing interval may be extended due to a strong crosswind and/or poor runway surface conditions. The taxi after landing will be conducted following the guidelines in paragraph **8.9.**

8.17.4. **IFR or VFR Straight-In Drag.** Local procedures may allow a formation lead to drag the wingman on final. Separation will be developed that allows for 6,000 feet of spacing on landing. This spacing may occur by the wingman configuring early and/or lead delaying configuring until the glide slope interception point.

Figure 8.13. Landing Interval.

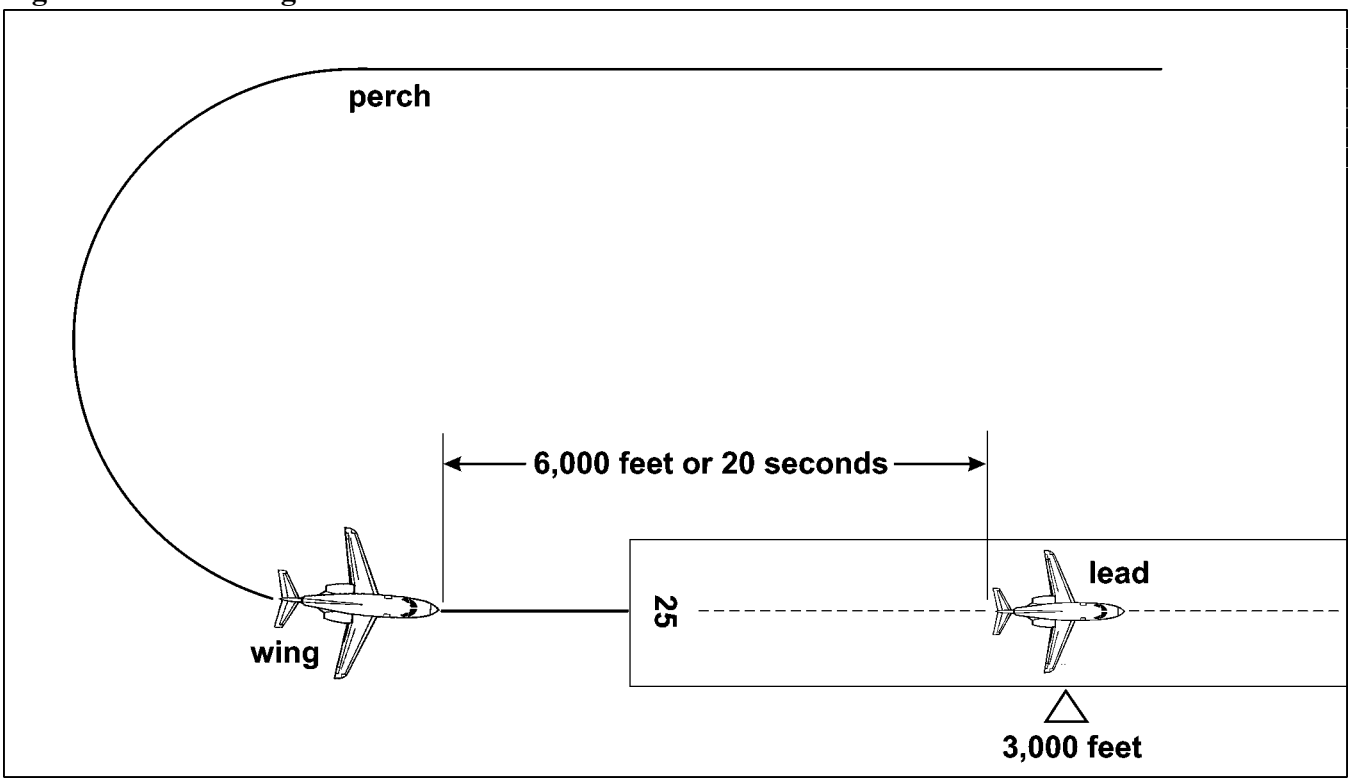

Chapter 9

AIR REFUELING

9.1. Mission Planning. You will be introduced to air refueling procedures by flying with another T-1A aircraft, which will serve as the simulated "tanker," and your aircraft will be the simulated "receiver." You will fly both positions. Both the tanker and the receiver must be thoroughly familiar with all aspects of air refueling in order to adequately plan the mission. Crew coordination during air refueling is crucial to a safe and successful mission. All crewmembers must be completely familiar with their required responsibilities. They must also be familiar with the weather forecast for the air refueling area so alternate plans can be prepared (General Planning and Area Planning).

9.1.1. **Communications Rendezvous (CR) Plan:**

9.1.1.1. In FLIP (AP/1B), the column headed "CR Plan" lists the communication frequencies to be used during the air refueling mission. (See **Figure 9.1.**) Item "a" is the primary interplane UHF frequency used for communications during the air refueling mission; item "b" is the secondary UHF frequency; and item "e" specifies the A/A TACAN channels for the tanker and receiver. Items "c" and "d" refer to radar beacon codes not compatible with the T-1A.

Figure 9.1. Required Reporting Points for Air Refueling Track 001 (East).

Number	ARIP	ARCP	Navigation Check Points	Exit	CR Plan	Refueling Altitudes	Scheduling Unit	Assigned ARTCC
(AR-001) (East)	BAM VORTAC 055/30 40°43' N 116°17' W	MLD VORTAC 226/94 41°27' N 114°18' W	MLD VORTAC 090/10 BOY VORTAC 230/92	OCS VORTAC 009/118 43°25' N 108°04' W	a. 343.5 b. 319.5 c. 1-1-1 d. 2/1 e. 30/93	FL 280/310	398 OSS/DOTK Castle AFB, CA DSN 347-2912	Salt Lake City ARCP-397.7 Exit-263.1

9.1.1.2. The A/A TACAN will be the primary method of effecting the rendezvous. The Y band TACAN channels will normally be used. The tanker aircraft will use the higher channel, and the receiver will use the lower channel. There is no need to swap channels during multiple rendezvous when roles are swapped.

9.1.2. **Air Refueling Track:**

9.1.2.1. The air refueling initiation point (ARIP) is where the receiver enters the air refueling track. It serves as the first of the two points that defines the tanker orbit pattern. The receiver must be established 1,000 feet below the tanker prior to crossing the ARIP. If 1,000 feet of separation is not confirmed prior to crossing the ARIP, the receiver will hold at the ARIP.

9.1.2.2. The air refueling control point (ARCP) is the primary reference for the rendezvous. It serves as the second point that defines the tanker orbit pattern.

9.1.2.3. Navigation checkpoints will be designated in the IFG if they are required reporting points on the air refueling track. (See **Figure 9.1.** for an excerpt from FLIP AP/1B.) Checkpoints are usually required on longer routes or if turn points are involved. The tanker would not normally report passing these points to ARTCC on an actual air refueling route unless the tanker is in a nonradar environment.

9.1.2.4. The air refueling track terminates at the exit point. This point is also called the end air refueling point and is identified on your chart with the symbol "E A/R."

9.1.3. **Air Refueling Control Time (ARCT).** The ARCT is the receiver's planned arrival time at the ARCP. This time is determined for the mission and discussed as part of the mission brief.

9.1.4. **Air Refueling Altitude.** During T-1A training, the altitude will be designated by local procedures and published in the IFG. Three consecutive altitudes will be requested for rendezvous and air refueling. Normally, the tanker will be at the middle altitude and the receiver at the bottom altitude. They will provide at least 1,000 feet between the receiver and the tanker during the rendezvous and 1,000 feet above and below the refueling formation once the rendezvous is complete. If only two consecutive altitudes are available, the tanker will be at the top altitude and the receiver will be at the bottom altitude. The receiver will remain 1,000 feet below the refueling altitude until positive visual contact is established with the tanker.

9.2. Military Assumes Responsibility for Separation of Aircraft (MARSA). Only the tanker will declare MARSA. The tanker will accept MARSA only after all of the following conditions have been met: radio contact has been established with the receiver, positive altitude separation has been confirmed, and positive position identification of the receiver has been confirmed.

9.3. Navigation:

9.3.1. Primary navigation responsibility for the rendezvous belongs to the tanker, who also ensures the receiver is updated on any changes. The tanker is responsible for controlling the offset flown during the rendezvous and executing the rendezvous turn. Flying the offset correctly is critical to executing a proper turn. The turn range will be identified primarily by A/A TACAN, using timing as a backup. See **Table 9.1.** for a timing chart.

Table 9.1. Timing Chart (No Wind).

ITEM	A	B	C	D	E	F	G	H	I	J	K	L	M	N	O	P	Q
		Distance															
		30	35	40	45	50	55	60	65	70	75	80	85	90	95	100	
	Closure Speed	Time															Turn Range
1	600	1:48	2:18	2:48	3:18	3:48	4:18	4:48	5:18	48	6:18	6:48	7:18	7:48	8:18	8:48	12
2	620	1:39	2:09	2:37	3:06	3:36	4:05	4:34	5:03	5:32	6:01	6:30	6:59	7:28	7:57	8:26	12.8
3	640	1:32	2:00	2:28	2:56	3:24	3:52	4:21	4:49	5:17	5:45	6:13	6:41	7:09	7:37	8:06	13.6
4	660	1:25	1:52	2:19	2:46	3:14	3:41	4:08	4:36	5:03	5:30	5:57	6:25	6:52	7:19	7:46	14.4
5	680	1:18	1:44	2:11	2:37	3:04	3:30	3:57	4:23	4:50	5:16	5:43	6:09	6:36	7:02	7:28	15.2
6	700	1:07	1:33	1:58	2:24	2:50	3:15	3:41	4:06	4:32	4:58	5:24	5:49	6:15	6:41	7:06	17
7	720	1:00	1:25	1:50	2:15	2:40	3:05	3:30	3:55	4:20	4:45	5:10	5:35	6:00	6:25	6:50	18
8	740	:54	1:18	1:42	2:06	2:30	2:55	3:19	3:43	4:08	4:32	4:56	5:21	5:45	6:09	6:34	19
9	760	:47	1:11	1:35	1:58	2:21	2:45	3:09	3:33	3:56	4:20	4:44	5:07	5:31	5:55	6:18	20
10	780	:42	1:05	1:28	1:50	2:13	2:36	3:00	3:23	3:46	4:09	4:32	4:55	5:18	5:42	6:04	21
11	800	:36	:59	1:21	1:43	2:05	2:28	2:51	3:13	3:36	3:59	4:21	4:44	5:06	5:29	5:51	22
12	820	:31	:53	1:15	1:37	1:58	2:20	2:42	3:04	3:26	3:48	4:10	4:32	4:54	5:16	5:38	23
13	840	:26	:47	1:09	1:30	1:51	2:12	2:34	2:55	3:17	3:38	4:00	4:21	4:43	5:04	5:25	24
14	860	:21	:42	1:03	1:24	1:44	2:05	2:26	2:47	3:08	3:29	3:50	4:11	4:32	4:53	5:13	25
15	880	:16	:37	:57	1:18	1:38	1:58	2:19	2:39	3:00	3:20	3:40	4:01	4:21	4:42	5:02	26
16	900	:12	:32	:52	1:12	1:32	1:52	2:12	2:31	2:52	3:12	3:31	3:52	4:11	4:32	4:52	27

9.3.2. The receiver maintains the air refueling rendezvous track and makes any necessary adjustments to rendezvous with the tanker at the ARCP.

9.4. Weather Radar:

9.4.1. The tanker examines the air refueling track and rendezvous airspace, using the weather radar while orbiting at the ARCP. The best way to accomplish this clearing procedure is to vary the range and the antenna angle of the radar to detect weather that can potentially affect air refueling operations.

9.4.2. Both the tanker and the receiver should use their weather radar to ensure the area is free of thunderstorm activity. However, it is the tanker's responsibility to determine if air refueling operations can be completed. The weather radar should be set up with increased range settings for maximum area coverage. The receiver will monitor the radar to back up the tanker with weather advisories until accomplishing the rendezvous.

9.5. Cockpit Configuration:

9.5.1. Ensure the A/A TACAN mode is operating and the radios are set at least 15 minutes prior to the ARCT. The EHSI simulates a radar beacon display, showing the relative bearing and DME position to the other aircraft.

9.5.2. Crewmembers must ensure a rendezvous with the wrong aircraft is not attempted. Comparing the A/A TACAN bearing and distance with the TCAS is an effective method of establishing positive identification. If TCAS is not operating, the tanker will direct the receiver to cycle A/A TACAN off and then on, to make positive identification.

9.6. Tanker Procedures:

9.6.1. **Orbit.** Ensure the Tanker Rendezvous Checklist from the IFG is completed. At the ARCP, the tanker will establish a left-hand orbit, using 30-degree bank turns, and fly 2-minute legs at 250 KIAS (**Figure 9.2.**). The tanker should not depart the orbit until the receiver calls, "IP inbound." Very seldom will you encounter no-wind conditions. Adjust the heading to maintain the computed offset. A proper orbit will allow the tanker to establish the correct turn range and offset when the receiver reports the ARIP (**Figure 9.3.**). Determine the drift and recompute the offset, as required. Use the FMS navigation as primary; use VOR or TACAN radial and DME fixes as backup to maintain the orbit and offset during the rendezvous. Auto-tuning the deselected NAVAIDs will increase FMS accuracy.

Figure 9.2. Air Refueling Track.

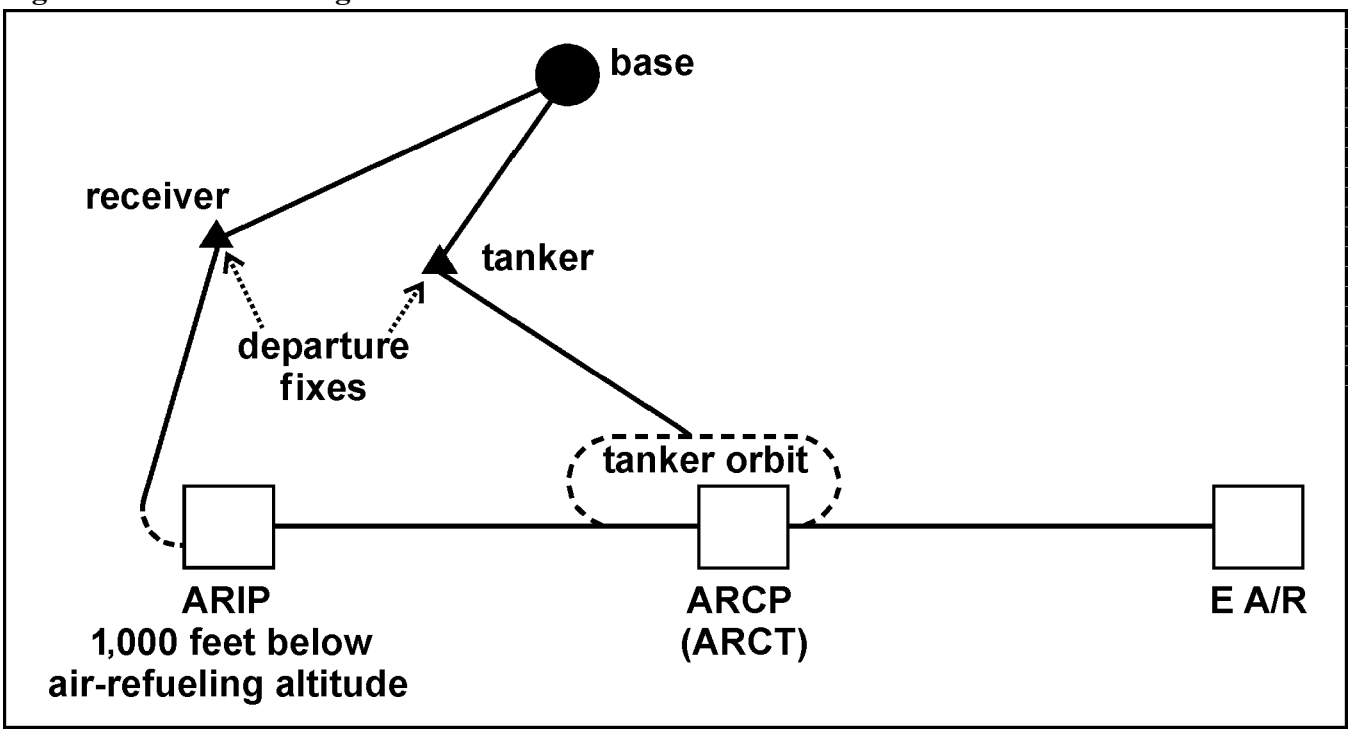

Figure 9.3. Turn Range and Offset Charts.

TURN RANGE

CLOSURE RATE	DRIFT CORRECTION HEADING INTO ARCP +15	+10	+5	0	-5	-10	-15	NOTES
1000	22	23	25	26	28	30	32	3nm Rollout Range
975	21	22	24	25	27	28	30	
950	20	22	23	24	25	27	29	
925	19	21	22	23	24	26	28	
900	19	20	21	22	24	25	27	
875	18	19	20	21	23	24	26	
850	17	18	19	20	22	23	24	
825	16	17	18	19	20	21	23	
800	15	16	17	18	19	21	22	
775	15	16	16	17	18	20	21	
750	14	15	16	17	18	19	20	
725	13	14	15	16	16	17	18	
700	12	13	14	15	16	16	17	
675	10	10	11	12	12	13	14	
650	9	10	11	11	12	13	14	
625	9	9	10	10	11	12	13	
600	8	9	9	10	11	12	12	
575	7	8	8	9	10	11	11	
550	7	7	8	8	9	10	10	
525	6	7	7	8	8	9	9	
500	6	6	7	7	8	8	9	
475	5	6	6	7	7	8	8	

OFFSET

TANKER TAS	DRIFT CORRECTION HEADING INTO ARCP +15	+10	+5	0	-5	-10	-15	NOTES
460	7	8	9	11	12	14	16	
440	6	7	8	10	11	13	15	
420	6	7	8	9	10	12	14	
400	5	6	7	8	9	11	12	
380	5	6	6	7	9	10	11	
360	4	5	6	7	8	9	10	
340	4	4	5	6	7	8	9	
320	3	4	4	5	6	7	8	
300	3	4	4	5	5	6	7	
280	3	3	4	4	5	6	6	
260	2	3	3	4	4	5	5	
240	2	2	3	3	3	4	4	

9.6.2. **Departing Orbit:**

9.6.2.1. The tanker pilot will maintain the air refueling altitude throughout the pattern. The receiver will be established 1,000 feet below the air refueling altitude prior to the ARIP.

9.6.2.2. When the receiver calls the ARIP, the tanker pilot will depart the orbit at 250 KIAS and proceed toward the receiver while maintaining the predetermined offset. The tanker pilot will calculate the offset and turn range, using information found in **Figure 9.3.** The tanker pilot will maintain the offset when proceeding toward the receiver, ensuring he or she is properly positioned to make the rendezvous turn. The tanker pilot will use the A/A TACAN and TCAS to monitor the position of the receiver and determine when he or she is at the proper range to initiate the rendezvous turn. When properly executed, this turn will place the tanker 1 to 3 nm in front of the receiver heading toward the ARCP on the air refueling track.

9.6.2.3. To assist the receiver in situational awareness, the tanker pilot will call when halfway through the turn.

9.6.3. **Communications:**

9.6.3.1. The first radio contact between the tanker and receiver will be not later than 15 minutes prior to the ARCT.

9.6.3.2. The tanker pilot will transmit the following information to the receiver: air refueling altitude, altimeter, and timing (on time, minutes early, or minutes late).

9.6.3.3. The receiver pilot will transmit the following information to the tanker: ETA to ARIP (on time, minutes early, minutes late), TAS during rendezvous, altitude, and altimeter setting.

9.6.3.4. The tanker pilot will normally arrange for three consecutive altitudes for the rendezvous and air refueling track. He or she is also responsible for all ATC communications, navigation, and weather avoidance during air refueling.

9.6.3.5. The receiver pilot will obtain ATC clearance onto the air refueling track and request clearance to the air refueling frequency, if applicable. Once cleared, he or she will monitor the air refueling frequency and may monitor the ATC frequency at his or her discretion to increase situational awareness. The receiver PNF and jumpseat pilot may monitor VHF or ATC at the discretion of the aircraft commander.

9.7. Receiver Procedures:

9.7.1. **Navigation.** The receiver will navigate and track the tanker simultaneously. Use the FMS for primary navigation, A/A TACAN on the EHSI to track the tanker's position, and multifunction display to monitor weather radar.

9.7.2. **Prior to ARIP.** Crewmembers must ensure a rendezvous with the wrong aircraft is not attempted. Comparing the A/A TACAN bearing and distance with the TCAS is an effective method of establishing positive identification. If TCAS is not operational, the tanker pilot will direct the receiver to cycle A/A TACAN off and then on to make positive identification.

9.7.3. **Fifteen Minutes Prior to ARCT:**

9.7.3.1. The receiver pilot will ensure the Receiver Rendezvous Checklist is completed. He or she will control and adjust the ARIP arrival time (recommended ETA at the ARIP is ± 30 seconds) in order to proceed down track at 285 KIAS and arrive at the ARCP at the ARCT. It is very important to continually verify his or her position and the tanker's location. The receiver will be established at 1,000 feet below the tanker's altitude prior to the ARIP and adjust his or her airspeed to 285 KIAS.

9.7.3.2. Although the turn range is the tanker's responsibility, the receiver should monitor the tanker's position and range. For primary tracking of the tanker, the receiver will use the A/A TACAN and TCAS as a backup. The receiver pilot will cross-check navigation and tracking at the tanker's "10 miles to the turn," "in the turn," and "halfway through the turn" calls to determine if the tanker is positioned properly for the rendezvous.

9.7.3.3. The receiver pilot will monitor your closure on the tanker during the turn. He or she should be approximately one-third of the turn range from the tanker when the tanker is halfway through the turn. The receiver crew will begin scanning the 10- to 11-o'clock position for the tanker in the turn and evaluate their position relative to the tanker. As the tanker rolls out, the receiver pilot will align 1 to 3 nm in trail at 285 KIAS. This is the appropriate place to prepare for air refueling by completing the preparation-for-contact checklist.

9.8. Rendezvous:

9.8.1. **ARIP.** The receiver will call the tanker and report crossing the ARIP and current altitude.

9.8.2. **Radio Calls.** The tanker will call the receiver, "Panther 11, in the turn," and "Panther 11, halfway through the turn" (**Figure 9.4.**). The receiver will call "Panther 12, 1 mile and visual." The tanker will clear the receiver to the precontact position. The receiver will report "Panther 12, stabilized precontact." The tanker will clear the receiver to the contact position, "Call sign, cleared to contact." The receiver will report, "Panther 12, contact" when in position, and the tanker will acknowledge.

Figure 9.4. Air Refueling Rendezvous.

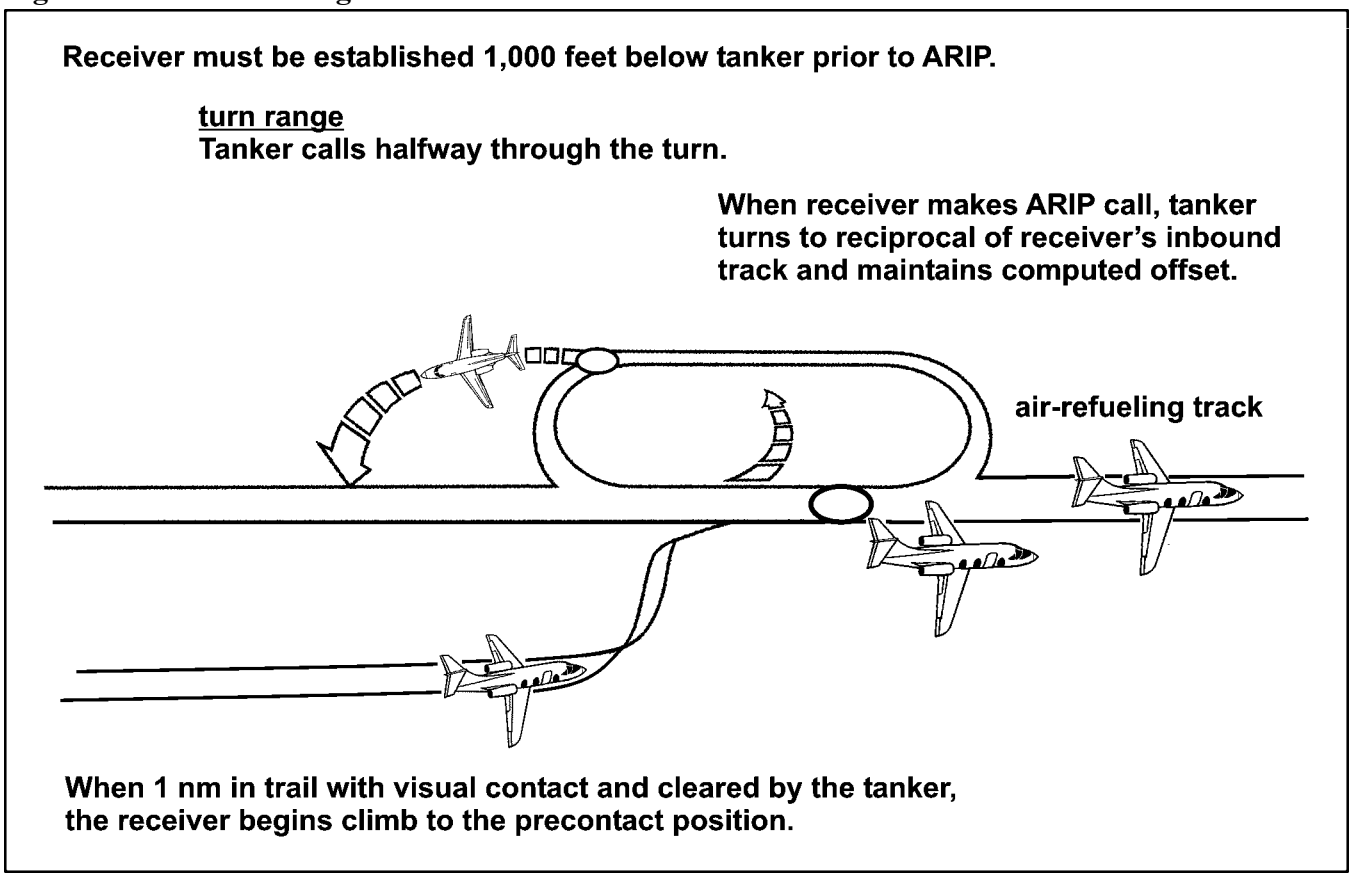

9.9. Closure Procedures:

9.9.1. The initial part of this phase of the rendezvous will generally be performed electronically. As the receiver, you must constantly monitor your position relative to the tanker on the A/A TACAN as you begin a closure to 1 to 3 nm (**Figure 9.5.**). The A/A TACAN bearing indication will continue to move toward the nose as the tanker turns and approaches your 12-o'clock position. Your approach should be adjusted to arrive 1 to 3 nm in trail while maintaining 285 KIAS. Plan to continue and arrive at 1 nm with an airspeed of 285 KIAS.

Figure 9.5. Closure.

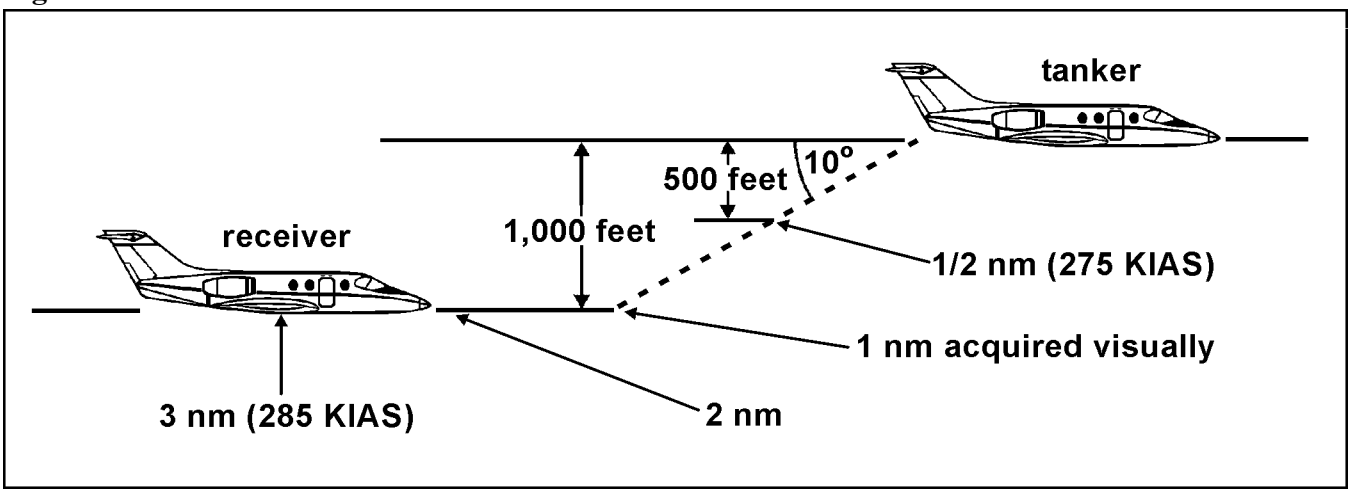

9.9.2. At 1 nm you must have the tanker in sight and be cleared by the tanker to begin climbing to air refueling altitude and closing to the precontact position. Remember that you are 35 knots faster than the tanker, so decrease airspeed incrementally as you approach the precontact position. At 1/2 nm you should be at 275 KIAS and slowing to 250 KIAS when arriving at the precontact position. The approach to the tanker is on a 10-degree climb line. Maintain the tanker in the center of the windscreen and have the copilot advise you of airspeed changes or deviations. The closer you get to the precontact position, the more you will need to minimize bank and heading changes. The tanker will move toward the upper center of the windscreen as you approach the precontact position.

9.9.3. To get a good visual picture, position your seat so your sight picture does not change each time you fly a rendezvous. Use the tanker as your attitude indicator, but resist the temptation to fixate. As you get closer, make smaller and smaller corrections as though you were flying an ILS on the tanker. Remember, the tanker continues to get bigger in the windscreen as the range decreases.

9.9.4. The three main factors you will be controlling throughout this phase are the azimuth, elevation, and rate of closure.

9.10. Overrun Procedures:

9.10.1. An overrun is indicated any time the receiver appears to be moving ahead of the tanker during the rendezvous. An overrun can be detected by electronic or visual means in either aircraft. For example, if the tanker is halfway through the turn <u>and</u> the receiver's A/A TACAN shows a range of 2.3 nm or the tanker is visually at the receiver's 9 o'clock position, an overrun is in the making.

9.10.2. The first crew to recognize an overrun will make an advisory call, "Panther, initiate overrun procedures." The tanker will accelerate to 285 KIAS and maintain the air refueling altitude while rolling out on track. After overtaking the receiver, the tanker will slow to 250 KIAS. The receiver will slow to a minimum of 250 KIAS, maintain 1,000 feet below the air refueling altitude, and maintain track. An "S" turn maneuver may be used (if necessary) to help the receiver drop back and, if overtaken by the tanker, to establish an adequate separation.

9.10.3. Once the tanker is in front of the receiver and there is a 1,000-foot altitude separation, either aircraft may call, "Panther, terminate overrun." Both aircraft may then reestablish their rendezvous airspeeds. When the receiver acquires the tanker visually and calls, "Panther 12, visual," the tanker may then clear the receiver to the precontact position.

9.11. Precontact Position:

9.11.1. The precontact position is 50 feet directly behind the tanker and 15 feet below (**Figure 9.6.**). When stabilized in this position, the receiver has 9 feet of tail-to-belly clearance on the tanker, which should place the tanker's wingtips just filling your side of the windscreen.

Figure 9.6. Precontact Position.

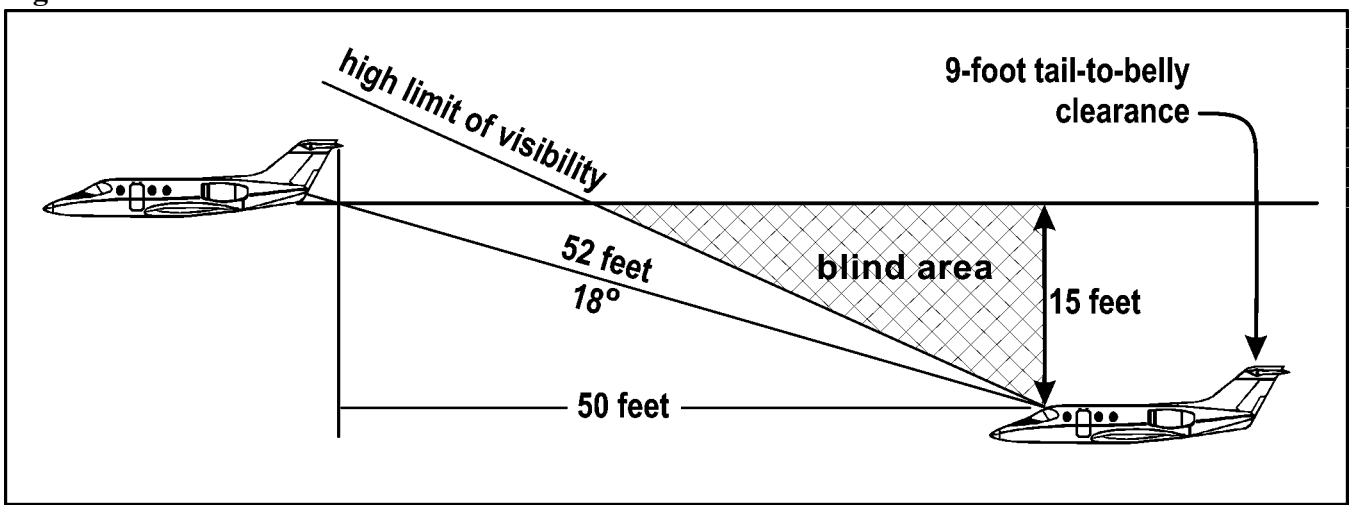

9.11.2. The aircraft commander may point out other visual references, using the following aircraft components: engine nacelles, trailing edge of wings, antennae, and AOA vanes.

9.12. Maneuvering Requirements for the Tanker:

9.12.1. The tanker may have specific maneuvering requirements after the receiver calls in the precontact position. The tanker must have stabilized the refueling airspeed, altitude, course, and heading. At this point in the air refueling pattern, the tanker must think in terms of helping the receiver wherever possible. Using careful corrections enables the receiver to fly a much smoother pattern. The tanker will not exceed 30-degree AOB in precontact and contact positions.

9.12.2. The tanker will use the autopilot as the primary means of establishing a smooth platform. The tanker will control airspeed deviations by making small throttle movements. Throughout this portion of the pattern, the tanker will not make large corrections (that is, more than 10 knots or 200 feet) without notifying the receiver.

9.12.3. The autopilot will be used to achieve the most stable tanker platform. The autopilot is capable of making small corrections far more efficiently than a pilot, but the pilot must be prepared to call for breakaway at the first indication of a malfunction. If it becomes necessary to change the autopilot configuration, direct the receiver to return to the precontact position.

9.12.4. Even though the aircraft is on autopilot, keep one hand on the control column and one hand immediately available for throttle use. Do not engage or disengage the system while the receiver is in the contact position.

9.12.5. The tanker must make smooth control inputs, especially during contact position maneuvering. Avoid abrupt or large inputs to pitch attitude, power, and bank angle—smooth movement is the key.

9.12.6. Some specific techniques for power and airspeed adjustment are useful for smooth tanker flying. The tanker will establish and stabilize the airspeed before the receiver moves to the precontact position so you can then leave the throttles alone, for the most part, throughout contact maneuvering. Your need to make changes should be infrequent. As the air refueling maneuvers continue, the aircraft becomes lighter and requires less power.

9.12.7. Probably the most significant hazard to smooth tanker flying is turbulence. Because turbulence is almost always going to be present, learn to deal with its effects. Remember, the turbulence level cannot exceed moderate up to the precontact position or light for the precontact or contact position. The best way to fly with turbulence is to ignore small pitch-and-roll changes and make a correction when the attitude does not return to its original position.

9.12.8. The aerodynamic effects of a T-1A receiver on the tanker are negligible compared to the effects of a large receiver.

9.13. Receiver Procedures for Maneuvering From Precontact to Contact:

9.13.1. Begin this maneuver by stabilizing in the precontact position with a zero rate of closure and wait for clearance from the tanker to proceed. Trim the aircraft for hands-off flight and note the position of the throttles. Also, position your arm to allow for small and positive movements while staying comfortable throughout the maneuver.

9.13.2. After receiving clearance to the contact position from the tanker, approach the contact position slowly, using only 2 to 3 knots of closure. Fly this maneuver by making small movements and small power changes. Always pause to evaluate the effects of each input and be prepared to take some input back out. For example, a small movement of the throttles to increase closure may require an even smaller reduction in power once that increase takes effect.

9.13.3. Flying this maneuver will require almost constant small inputs or adjustments, especially as you arrive at the contact position (**Figure 9.7.**). Continue making the necessary adjustments and then stabilize in the contact position. The instructor will point out the references for the contact position. Distinct references include: 1) placing the bottom of the VHF antenna on the stripe painted on the bottom of the aircraft, and 2) being able to see the AOA vanes in front of the leading edge of the wing.

Figure 9.7. Contact Position.

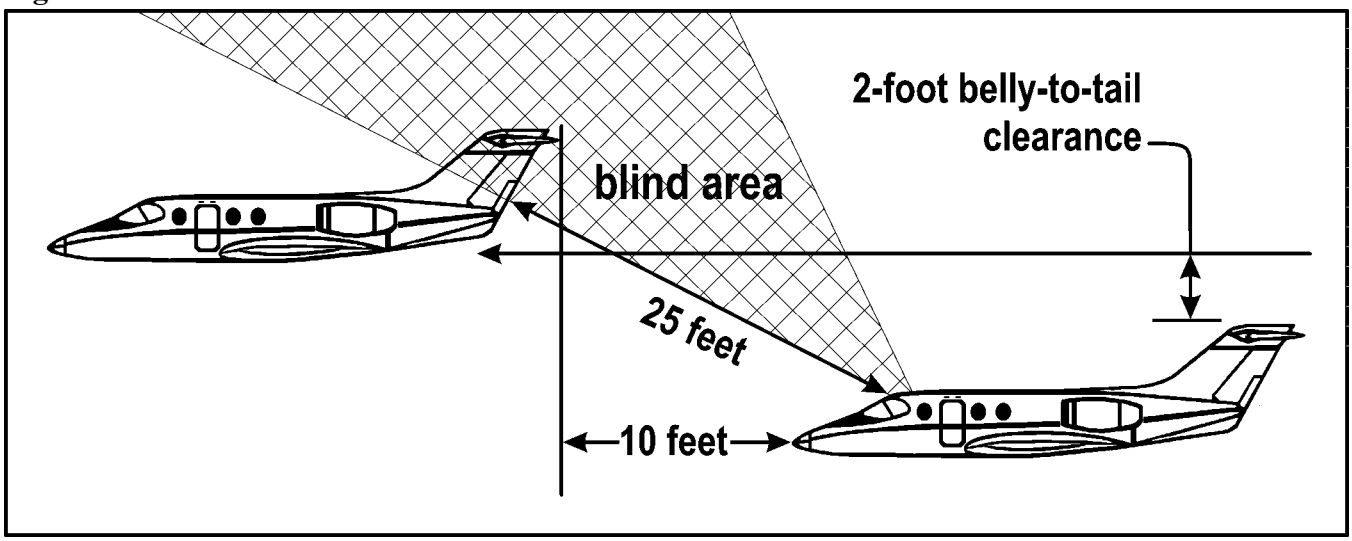

9.13.4. In addition to the possibility of some light turbulence, be prepared to overcome the effects of jetwash, wingtip vortices, and wake turbulence. These effects are generated by the tanker aircraft and, unlike turbulence, are usually in the same location. Use power cautiously to avoid driving your aircraft into the tanker's jetwash or increasing closure to the point where a breakaway must be declared. Remember, you will need to reduce power when closure begins and then make another power adjustment to counter that reduction.

9.14. Maintaining Contact Position:

9.14.1. The most important point to remember when flying in the contact position is to always make small corrections. Your corrections should be limited to approximately a 2-degree bank change and a 1-degree pitch change. Give all corrections time to take effect and be prepared to remove some of the correction as it takes effect. If large corrections are required, closure is too fast, or you are uncomfortable with the approach, return to the precontact position and stabilize.

9.14.2. The contact position is one specific point in the sky in relation to the tanker aircraft. That point does not move, regardless of the conditions, but your aircraft will move almost constantly. The contact point rests within an envelope behind the tanker (**Figure 9.8.**). The envelope's vertical limits are ± 10 degrees, its fore and aft limits are ± 6 feet, and its lateral limits are ± 10 degrees. Work to stay at the center of that envelope, keeping corrections as small and smooth as possible. You will actually be flying around and through that point, attempting to stay as close to it as possible. Constantly be aware of your roll tendency, attitude, and power settings.

Figure 9.8. Contact Envelope.

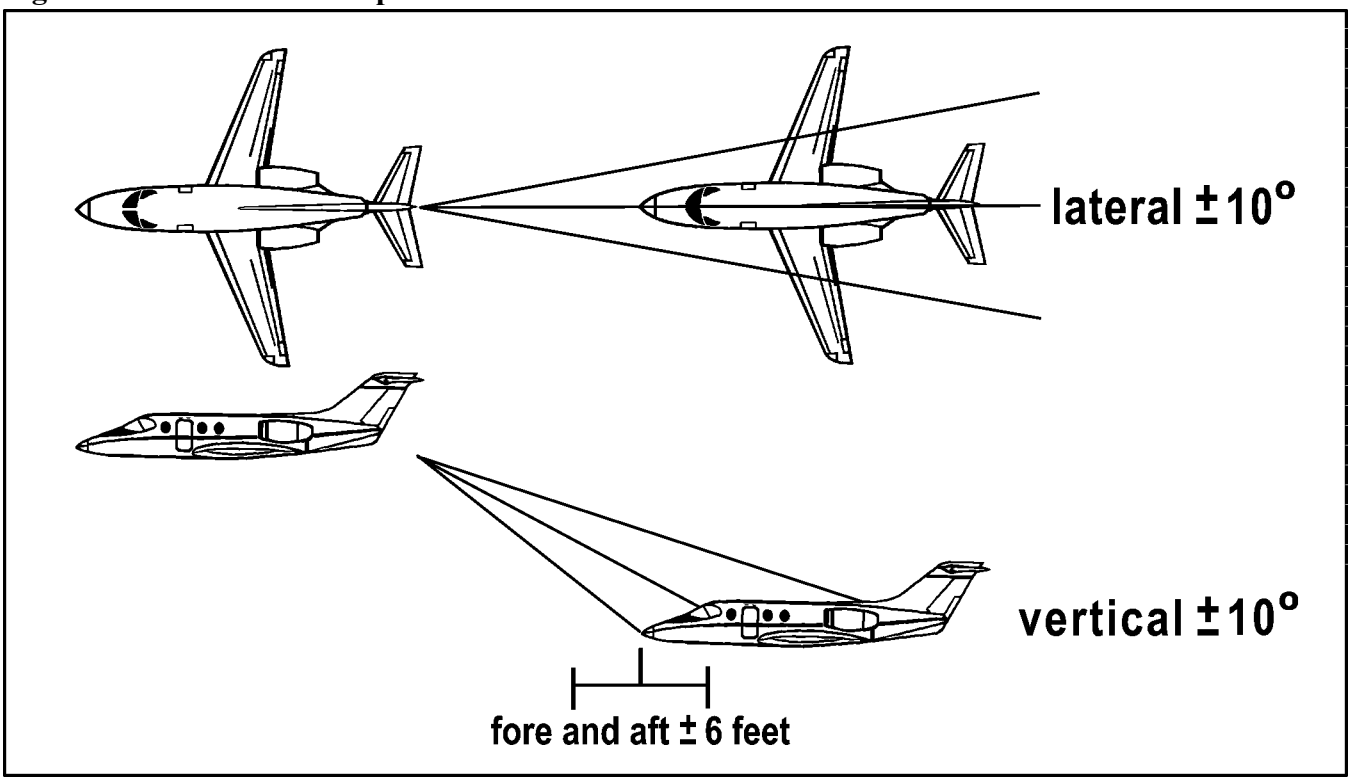

9.14.3. The tanker will normally use 15 degrees AOB in turns while the receiver is in the contact position. However, the tanker may use 30 degrees AOB for maneuvering after the receiver has attained proficiency at 15 degrees AOB. He or she must anticipate the power and yoke inputs required to maintain the proper position.

9.15. Breakaway Maneuver:

9.15.1. A breakaway maneuver will be accomplished during precontact or contact maneuvering any time the tanker or receiver determines aircraft separation is required immediately to avoid a collision or prevent a dangerous situation from developing. The tankers call sign will be used to initiate the breakaway. The radio call will be, "Panther 11, breakaway, breakaway, breakaway," and it may be called by either aircraft.

9.15.2. Once the call is initiated, the tanker will advance throttles to approximately MCT and maintain the current bank angle. The receiver will retard the throttles to idle and call for speed brakes (as required by the severity of the closure) while backing and descending. The tanker will be notified when well clear. If the tanker is not in sight, the receiver will continue descending to the bottom of the altitude block and attempt to locate the tanker visually and by electronic means. The tanker will continue to accelerate until the receiver calls, "well clear."

9.15.3. Breakaway procedures are practiced to prepare for actual situations that may be encountered. Either aircraft may direct the practice breakaway. Before the practice breakaway is initiated, a preparatory radio call will be made by saying, "Panther 11, practice emergency separation ____ seconds after contact call." Then the breakaway procedures in paragraphs **9.15.1.** and **9.15.2.** will be complied with. After the procedure has been executed, the tanker will direct the next maneuver to be completed (separation for another rendezvous, move to precontact position, etc.).

9.16. End Air Refueling (E A/R) Point. Prior to the exit or E A/R point, the tanker should coordinate for further clearance for the tanker and receiver. The final communications to be performed in the air refueling track is at the E A/R point and is given by the tanker to the receiver. The tanker will pass the ARTCC frequency, Mode 3 setting, and any clearance instructions received.

9.16.1. **Separation.** Prior to the E A/R point, the tanker will climb to the top of the altitude block while the receiver descends to the bottom. Both aircraft will report when established at the separation altitude on air refueling primary and then contact ARTCC for clearances and termination of MARSA. ***NOTE:*** The tanker may have the receiver return to the visual formation position if a formation recovery is desired.

9.16.2. **Post-Air Refueling.** Each aircraft will complete the applicable post-air refueling checklist. The tanker will call the ARTCC when aircraft are vertically separated, and the receiver will report to the ARTCC with altitude. Both aircraft will continue under separate IFR clearances.

Chapter 10

LOW-LEVEL NAVIGATION AND FORMATION AIRDROP

Section 10A—Overview

10.1. Mission Objective. The main objective of an airdrop mission is to deliver cargo and troops to the drop zone (DZ) safely, accurately, and on time.

10.2. Formation Considerations:

10.2.1. During airdrop familiarization training, you will be required to fly formation while performing numerous other tasks at low level. Situational awareness is essential for this phase of training.

10.2.2. Lead's primary responsibilities are to navigate, time, clear for the formation, and provide effective formation communications.

10.2.3. The wingman's responsibilities include maintaining formation position by visual reference and A/A TACAN, clearing through lead, backing up lead in navigation, and being prepared to assume the lead position and responsibilities at any time.

Section 10B—Low-Level Navigation on a Military Training Route (MTR)

10.3. Purpose. The purpose of low-level navigation is to fly a selected ground track to arrive at a designated DZ at a designated time over target (TOT). Low-level flying requires extensive preflight planning to ensure flight safety and maximum training from each sortie. Use these skills and techniques to fly the airdrop missions.

10.4. Preflight Coordination. The first step in preparing for a low-level mission is to be completely familiar with the route requirements and the following applicable publications: FLIP (AP/l and AP/1B); AETC/TRSS Handout 11-1, *Navigation for Pilot Training,* Chapters 5 and 8 (at Web site **http://trss3.randolph.af.mil/bookstore//general.htm**, under Nav4Pilots); and the Chart Update Manual (CHUM) located in base operations. Check with the controlling agency for unpublished restrictions and the low-altitude charts for airspace restrictions.

10.5. Mission Planning:

10.5.1. T-1A low-level missions are normally flown at 240 and 210 knots groundspeed (that is, 4 and 3.5 nm per minute, respectively) on IFR military routes, VFR military training routes, and slow-speed low-altitude training routes (SR). Ensure the planned speed is approved for the selected route. Some routes have speed restrictions the T-1A cannot comply with. Use the performance charts in TO 1T-1A-1-1 to determine a fuel flow for the airspeed you are flying. Check the route length and determine your capability to complete the route with the fuel on board.

10.5.2. When preparing for the flight briefing, check the forecast weather for the route to include wind and confirm final coordination for the route. Compute an IAS that will give the preplanned groundspeeds based on current conditions. See AFI 11-202, Volume 3; AFI 11-2T-1, Volume 3; and applicable MAJCOM publications for minimum ceiling and visibility for low-level training.

10.5.3. Plan an altitude that gives adequate terrain and obstacle clearances. Low-level routes are flown between 500 and 1,500 feet AGL, depending on pilot experience and comfort level. Refer to AFI 11-2T-1, Volume 3, for various restrictions on low levels.

10.6. Route Development:

10.6.1. The tactical pilotage chart (TPC), a 1:500,000-scale chart, is the best choice to use while flying low-level navigation in the T-1A. The joint operational graphic (JOG) chart, a 1:250,000 scale chart, is useful for detailed route study and planning (especially on the IP to DZ run-in), but it can be unwieldy to use on the flight deck and requires excessive map-reading. Essential information for accomplishing a successful mission is on or can be added to a TPC.

10.6.2. The first step in planning the route is to draw the route corridor and update the chart with the latest information from the CHUM. Identify significant obstacles and high terrain within that corridor. Annotate low-level charts with the location and dimensions of Class A, B, C, and D airspace; civil and military airfields; potential high density traffic areas (parachute activity areas and ultra light, hang glider sites, etc.); and noise or sensitive environmental areas that should be avoided within 5 nm of any planned VFR route or MTR lateral boundary. Annotate and brief applicable airfield approach control frequencies in the vicinity of Class A, B, C, and D airspace. In addition, annotate and brief the intersection of other VFR MTR (VR) or IFR MTR (IR), if applicable, and any other possible areas of conflict. ***WARNING:*** This part of the planning is imperative for flight safety; do not neglect it.

10.6.3. Select a DZ along your route and an easily identifiable initial point (IP) located about 3 to 4 minutes prior to the DZ to allow sufficient routing for ingress to and egress from the DZ. The IP is an easily discernible point, located along the route of flight prior to the DZ, used to establish a final heading and adjust timing to make the DZ at the TOT.

10.6.4. The IP plays an even more important role in flying airdrop missions later in training. For now, select a distinctive timing start point inside the route corridor, but not necessarily at the published entry point. Construct the desired ground track from the start point to the IP, using easily identifiable turn points so the ground track remains within the corridor. Be sure to consider aircraft turn performance and route corridor when selecting turn points. ***NOTE:*** The coordinates in FLIP AP/1B are for the route center line, but you do not necessarily have to locate your turn points on that center line.

10.6.5. The best features to use as check and turn points are normally natural features (as opposed to manufactured features which may change shape or be camouflaged). Always try to choose route check points close to the track. Turn points should be chosen by keeping uniqueness, vertical development, funneling features, and terrain or obstacle clearance requirements in mind. Avoid using a turn point that cannot be seen until the last minute.

10.6.6. It is important to try to read the shape of the land from the map. Pay particular attention to turn points so you can visualize the terrain and the features you are going to see as you approach the turn points. Look for funnel features (for example, converging roads, railroads) or other prominent pre-turn check points.

10.6.7. Do not try to memorize the route, but study it very carefully after it has been developed. The more familiar you are with the check points and turn points, the easier they will be to identify while flying the route.

10.7. Map-Marking. In addition to the information in AETC/TRSS Handout 11-1, annotate your map as follows:

10.7.1. Circle turn points, but do not obliterate or obscure them. Draw the MTR corridor from the entry point to the planned exit point.

10.7.2. Plan and measure the turning radius for the groundspeed and bank angle used. Use a tactical plotter, if available, or refer to Chapter 20 of AFMAN 11-217, Volume 1, for aircraft turning performance.

10.7.3. Mark the entire route with 1-minute tic marks, taking into account the slowdown for DZs.

10.7.4. Compute continuation fuels for points along the route. Continuation fuel is the minimum required fuel to complete the route at the planned speeds and altitudes plus fuel to return to base with AFI 11-202, Volume 3, fuel reserves.

10.7.5. Calculate a bingo fuel (including the required minimum AFI 11-202, Volume 3, fuel reserves) for return to base or destination airfield by the most practical means from the most distant point on the route.

10.7.6. Draw information boxes aligned with each leg. Enter heading, airspeed, continuation fuel, and other relevant information.

10.7.7. Annotate information and emergency and alternate airfield locations you feel are necessary to expedite your divert, if required.

10.7.8. Plan for your routing to and from the low-level route. Study features along the route to the entry point.

10.7.9. Compute an ERAA for the planned portion of the low-level route and clearly annotate it for easy in-flight reference. Compute this altitude to provide 1,000 feet (2,000 feet "mountainous" [FLIP]) clearance above the highest obstacle within 25 nm either side of the route.

10.8. In-Flight Preparation:

10.8.1. Maintaining an accurate altimeter setting is very important when flying low level because it helps determine your height above the terrain. When the weather is changing rapidly, the altimeter setting is probably changing rather quickly as well. Always try to obtain a current altimeter setting within 1 hour of entering the route. An altimeter setting is available from the PMSV, FSS, ARTCC, or a metro forecast. (Depending on the preflight itinerary and route of flight, the metro forecast may be the least timely.)

10.8.2. Certain preparations and precautions should be taken before entering a low-level route to avoid encountering any surprises or diversions:

10.8.2.1. Carefully review the low-level entry by checking the first leg's heading, altitude, and prominent features near the entry point. Prepare and review an abort plan should the need arise to leave the route.

10.8.2.2. Review the planned terrain clearance altitude you will fly and set the radio altimeter warning to that altitude (500 to 1,500 feet). Set the DH on your EHSI to an altitude 10 percent below the planned terrain clearance altitude (for example, 10 percent of 500 feet, or 450 feet on

the DH) so you will have an additional "warning" signal if you descend below the planned altitude.

10.8.2.3. Compare the actual fuel available against the planned fuel to ensure adequate fuel exists to complete the mission. Resolve any differences and ensure the fuel is balanced between the wing tanks.

10.8.2.4. Fasten your seat belts and shoulder harnesses and secure any loose items in the cabin. Request a descent clearance far enough before the entry point to allow the ARTCC to respond and for you to descend to the entry altitude. Other radio calls will be required and will vary depending on the type of route being flown.

10.8.2.5. Complete the low-level entry and exit checklists. The crew briefing should cover how you will enter the route. For altimeters, ensure proper setting prior to entering the route. Radio altimeters should be set as described in paragraph **10.8.2.2.** Set the ERAA in the altimeter altitude preselect window. Post an MCT for route abort procedures. Ensure belts and harnesses are fastened and loose items are secured prior to entering the route.

10.8.3. Entry into an IFR MTR requires a clearance from the ARTCC, approach control, or other controlling agency specified in FLIP AP/1B. The ARTCC will assign a frequency to monitor or assign the one published in the AP/1B. Position reports to the controlling agency at specified points are required on some routes. These points will be listed in AP/1B and should be marked on your map.

10.8.4. When flying a VFR MTR or an SR, you are not required to obtain entry clearance. Cancel the IFR flight plan and monitor FSS on 255.4 megahertz (MHz). When entering a VFR MTR, make a radio call to advise FSS and other aircraft of your callsign, groundspeed, en route altitude, entry time, and exit time.

10.8.5. Be prepared to make a pilot report (PIREP) if any significant weather is encountered.

10.8.6. When entering an IFR MTR, set the IFF as specified by the controlling agency. Squawk "4000" when on a VFR MTR and "1200" when on an SR.

10.8.7. With so many things to do at the entry point, remember to start the timing clock over the timing start point. This is the only way you can begin the DR process.

10.8.8. Although lost communication procedures may vary depending on the individual situation, the following simple solution applies to IFR MTR, VFR MTR, or SR: remain VMC and land as soon as practical.

10.9. Descent and Leveloff Procedures:

10.9.1. For descent into a low level, cross-check the radio and pressure altimeters at an altitude between 1,000 and 2,000 feet AGL.

10.9.2. Once the cross-check of altimeters is complete, begin a descent to the final low-level altitude. Before making this descent, calculate a leveloff altitude (MSL) to provide desired terrain clearance (AGL).

10.9.3. On VFR MTR and SR, attempt to cross the entry point at the final low-level altitude, but comply with route restrictions that specify a higher altitude clearance than originally intended.

10.9.4. While flying the low level, observe the restrictions, requirements, and hazards pertinent to this type of operation. Evaluate weather conditions to ensure the ceiling remains in accordance with applicable directives. Continually check the map for hazards and obstructions near the course.

10.10. Orbit Procedures. In the event the weather prevents a VMC formation flight to the low-level entry point, the following procedure may be used to rejoin a formation prior to route entry:

10.10.1. The flight lead will prebrief the orbit point, holding turn direction and expected altitude for rejoin. The lead aircraft should plan to take off, as a minimum, 8 minutes earlier than normally required to enter the route. This allows two standard holding patterns to complete the rejoin prior to route entry time. The suggested minimum takeoff interval is 4 minutes. The lead aircraft will hold at an orbit point no lower than 1,500 feet AGL. The wingman will enter the same holding pattern a minimum of 1,000 feet above the lead's altitude until both aircraft are in VMC, a visual tally is confirmed by the wingman, and the flight lead declares MARSA. ***NOTE:*** MARSA requires a letter of agreement with the owning ARTCC facility.

10.10.2. The wingman will maneuver as required to complete the rejoin. If a rejoin cannot be accomplished, the wingman will coordinate to obtain clearance to depart the orbit first.

10.10.3. Following the low-level portion of the flight, lead may be required to separate the formation due to weather prior to RTB. This may be accomplished by holding in VMC while coordinating for separate clearances or, if weather allows, coordinating en route.

10.11. Fuel Considerations:

10.11.1. Fuel management is critical during most flight activities, but it becomes even more critical during low-level flight because so many other factors demand your attention over an extended period of time.

10.11.2. To help eliminate the problem of low fuel during low-level flight, thoroughly plan for contingencies, such as altering the flightpath to avoid weather and airspace or route restrictions. Any change in the flight plan or in-flight delays may cause unexpected fuel use.

10.11.3. Other unplanned events, such as aircraft malfunctions and bird strikes, may cause an abort of the low-level part of the mission and a change of destination, making it important to be continually aware of how much fuel remains.

10.11.4. Proper fuel management begins with an accurate fuel log. Fuel entries need to be completed very accurately from the TO 1T-1A-1-1 fuel charts. A very good technique is to compare actual fuel used against the planned amount, continuation fuel, and bingo fuel at every second or third checkpoint between entry and exit. If the fuel remaining is greater than or equal to the continuation fuel, continue the route and land with the planned reserve. If it is less, plan to abort the route and proceed to the base of intended landing.

10.11.5. Bingo fuel is calculated from the most distant checkpoint from the landing field. If you have not reached this point and are at bingo fuel, abort the route and proceed to an alternate landing field. By planning properly and checking the fuel at all checkpoints, you should never be down to bingo.

10.11.6. If the low level is aborted, attempt to call the controlling agency in the same way normal low-level exit calls are made. Because the situation is unplanned, give the location, altitude, descrip-

tion of the situation, and plan of action. Remain VMC until the controlling agency gives a clearance. If contact cannot be established, return to the base VFR while remaining VMC.

10.12. Flying the Route:

10.12.1. A considerable amount of time has been spent planning this sortie, so don't throw it all away as soon as you get airborne. Fly the plan. If all you do is fly an accurate heading and airspeed and turn on time, you will not be very far off by the end of the sortie.

10.12.2. Without jeopardizing clearing en route to the entry point, fly the planned headings, speeds, and leg times from takeoff to the entry point. You may use NAVAIDs such as TACAN to confirm your position if necessary, but try to maintain position awareness by using the clock, the map, and ground features until you visually acquire the entry point.

10.12.3. Clearance onto a low-level route must be issued by the proper controlling agency, normally the ARTCC or as specified in AP/1B. When flying low-level routes, maintain radio contact with traffic control and service agencies. Do not hesitate to have the jumpseat pilot monitor frequencies to help minimize the PF and PNF workload. The ARTCC controls access into and out of IFR MTR, as well as airspace going to and from low-level routes.

10.12.4. Although the FSS provides advisories and coordination services, it does not control any airspace or routes. The FSS monitors VFR MTR activity, broadcasts severe weather advisories (significant meteorological information [SIGMET]), may provide notification of route closure, and may act as a radio relay to ARTCC.

10.12.5. When entering an IFR MTR, you are still on an IFR clearance and following an IFR flight plan. Enter at the IFR altitude specified in the FLIP AP/1B route description. When entering a VFR MTR or an SR low-level route, cancel the IFR clearance and proceed VFR to the entry. Before entry, observe hemispheric altitude rules above 3,000 feet AGL. When not prevented by other route restrictions, enter a VFR MTR or SR at the altitude specified during the briefing and commensurate with your experience (1,500 feet AGL to a minimum 500 feet AGL).

10.12.6. Before arriving at the entry point, make sure the heading system is accurate. Identify the entry point as early as possible and position the aircraft to line up on the heading and on track before overflying it. Enter and exit MTRs only at the designated points identified in the FLIP AP/1B as entry, alternate entry, exit, and alternate exit points. This restriction provides an orderly flow of traffic in and out of the route and some assurance of adequate separation of multiple aircraft using the route. The Federal Aviation Administration (FAA) has evaluated and approved these points; they do not conflict with other airspace. Hack clocks passing the timing start point. Once inside the route structure, adjust the speed for the first leg. Adjust the IAS for temperature, altitude, and wind to ensure accurate timing on each leg.

10.12.7. When you are flying along a planned route, the best method of map-reading is clock to map to ground. Always fly with a definite plan in mind. Do not try to do excessive map-reading because your flying accuracy will suffer. Ensure the aircraft is trimmed up in all three axes with power set to maintain the desired airspeed. This means control of the aircraft is accomplished and composite flight becomes easier.

10.12.8. As PF, keep your head out of the flight deck as much as possible and look for ground references and possible conflicts (for example, an unexpected aircraft in your area or a large bird). Clearing continuously is essential at low level. Following the principles of good crew coordination, have the

PNF and/or jumpseat pilot serve as map reader and navigator. They should keep you informed on what to expect as far ahead on the route as you feel comfortable handling the aircraft. Ensure all crewmembers help you clear and don't bury their heads in the cockpit.

10.12.9. Make heading corrections as necessary to get back on track, but avoid making excessive ones. Remember, if all you do is fly accurate heading and airspeed and turn on time, you will not be very far off course at any time throughout the route. Use the features on the track as aim points. Look for these points on your chart ahead of your present position. Then acquire these points visually as soon as possible and confirm their position by use of the clock and timing marked on the map. Develop a work cycle for such important items as monitoring actual against continuation fuels, monitoring actual against planned times at turn points, cross-checking headings after turns, and knowing when the PNF and/or jumpseat pilot should be giving the next checkpoint briefing.

10.12.10. Make every effort to arrive over the DZ at the TOT. Make corrections as early as possible so large airspeed changes are not required approaching the DZ. It might be necessary to recompute airspeed based on the distance remaining to the DZ and make the appropriate correction. Remember, during formation airdrop training, you will also have the wingman to think about.

10.12.11. While flying the low level, you will be regularly climbing and descending to maintain the desired altitude. Remember to adjust power before changing altitude and to lead leveloff by 10 percent of the RA or VSI. If large altitude changes are required, start the climb further back from the obstruction.

10.12.12. The following three low-level methods—contour, modified contour, and constant altitude—may be used for airdrop missions as follows:

10.12.12.1. The *contour method* requires the flight to maintain 500 feet AGL altitude throughout the route. This method calls for following the terrain exactly, which results in an extremely rough ride and may require a lot of work on the part of the aircrew to observe and fly the route safely. As the terrain rises and descends, the aircraft must match the contour to maintain the constant 500-foot clearance.

10.12.12.2. The *modified contour method* calls for an average and is flown with a smooth terrain profile rather than at actual altitude. If a section of the terrain rises and descends numerous times, the aircraft must climb to an altitude that allows an average higher than 500 feet clearance to avoid ever flying lower than 500 feet AGL over that section of the route. Therefore, the average altitude will end up being higher than 500 feet (maybe 600 to 700 feet) as the terrain continues to rise and drop beneath the aircraft as you make continuous attempts to fly the contour.

10.12.12.3. The *constant altitude method* is flown by computing an altitude that allows a 500-foot or higher clearance above the highest obstacle along, and 5 nm on either side of, the entire route. As the terrain varies, fly a constant altitude regardless of the height above the ground. Using this method will familiarize the crew with the specifics of a low-level route because the field of vision is much larger.

10.12.13. Accurate DR and time control to the DZ require knowledge of the groundspeed. To determine the groundspeed, know the distance between landmarks and accurately measure the time it takes to cover the distance between them. Annotate the chart with measured distance and precomputed times or have the DR computer preset the TAS and make the calculations on the spot. As soon as the groundspeed is determined, make adjustments to compensate for the wind.

10.12.14. Although instruments need to be cross-checked regularly, keep your head out of the flight deck as much as possible while flying low level. At 500 feet AGL, you are only seconds above the ground and cannot allow your attention to be diverted for even a short amount of time.

10.12.15. Avoid becoming complacent during the RTB. Give the return leg the same emphasis you gave the leg-to-route entry.

10.13. Time Management Procedures:

10.13.1. Accurate DR and time control on the low-level route require the timing clock be started over the timing start point. It is also necessary to compare the actual time of arrival to the preplanned elapsed time annotated at each turn point. Control the groundspeed with power adjustments on each leg of the route. The last timing check before the DZ is at the IP. Controlling groundspeed along the route reduces the need to make large adjustments to arrive at the DZ at the TOT.

10.13.2. For every second late or early, increase or decrease groundspeed by 1 knot and hold that change for the number of minutes equal to the nms per minute you are flying. For example, if you are flying at 240 knots groundspeed (4 nm per minute) and are 10 seconds late, you should increase the groundspeed by 10 knots and hold the correction for 4 minutes. If you are flying 300 knots groundspeed (5 nm per minute) and are 10 seconds late, you should increase groundspeed by 10 knots and hold the change for 5 minutes.

10.13.3. The time or speed in this relationship may be changed as long as the time-speed ratio remains constant. For example, in the situation in paragraph **10.13.2.**, at 240 knots groundspeed you could have increased groundspeed by 20 knots for 2 minutes or 40 knots for 1 minute. Use this correction when you need to complete the time-speed correction in a short amount of time.

10.14. Course Corrections:

10.14.1. If you are off course when flying low level, several aids have been developed to help you get back on course. The most basic method is to simply aim for a distant feature on track. Another simple method, if available, is to use linear landmarks such as roads or drainage patterns to serve as a funnel to steer you back to track.

10.14.2. Many times these aids are not available so other methods to correct back to course must be employed. The standard closing angle (SCA), based on the 60-to-1 rule used to solve other navigational problems, is one such method. The SCA is calculated with the following formula: SCA = 60/ groundspeed (nm per minute). Therefore, at 210 knots groundspeed (3.5 nm per minute), SCA = 60/ 3.5 = 17° and at 240 knots groundspeed (4 nm per minute), SCA = 60/4 = 15°.

10.14.3. For every mile off track, change the heading toward track by the SCA for 1 minute. For example, you are flying 240 knots groundspeed and are 2 nm right of track with a planned magnetic course of 100 degrees. The correction is 15 degrees left to 085 degrees for 2 minutes. The course could also be corrected in one-half the time by doubling the SCA; that is, 30 degrees left to 070 degrees for 1 minute.

10.15. Reorientation:

10.15.1. At one time or another, all pilots experience moments when they have some doubt about their position when flying low level. In those situations, always remember to follow basic DR procedures, rely on them, and above all, do not panic.

10.15.2. Often what you see out the windscreen does not exactly match what is on the map. Many cultural features are not on the map, and that is why it is important to work from the map to what is seen on the ground. When a checkpoint time is reached, but the checkpoint cannot be located, turn on time and try to locate other map features.

10.15.3. If you are really unsure of the position, exercise the three Cs—climb, conserve, and confess:

10.15.3.1. *Climb* to increase visual range. Vision to the horizon is about 11 nm on the ground, 24 nm at 500 AGL, and 42 nm at 1,500 feet AGL. At a higher altitude, visual range is increased, providing more information and landmarks to confirm a position. If you are unsure of your position, climb to the ERAA to confirm it.

10.15.3.2. *Conserve* fuel by slowing and climbing to a more fuel-efficient altitude.

10.15.3.3. *Confess* disorientation to yourself and others (FSS or ARTCC). Do not be afraid to ask for help; it's available.

10.15.4. The navigation map does not contain new features, and the absence of these features tends to contribute to disorientation. A new manufactured feature might not yet be on the map, or many times there is not enough map space to include all the actual geographic features. The opposite can also be true—bridges and towers might be dismantled or relocated. The fact that many areas contain one or two similarly positioned features also tends to contribute to the confusion. Positively identify a checkpoint by looking at the surrounding features and finding something unique about the features in reference to the checkpoint.

10.16. Turn Point Procedures. When flying low level, your workload will include flying the aircraft, clearing, looking for checkpoints, maintaining terrain clearance, checking ETAs and fuel quantities, and continually evaluating new and changing information. Each of these items is important. One way to ensure that all important items are completed at each turn point is to develop a good habit pattern. To develop this habit pattern, ensure these items are completed in the following sequence at each checkpoint:

10.16.1. The PNF will preannounce the next heading, turn direction, and altitude about 1 to 2 minutes from the turn point.

10.16.2. Both the PF and PNF will clear during the turn.

10.16.3. The PNF will note the time and fuel before or immediately after each turn point and compare the actual fuel remaining with planned continuation fuel at that point.

10.16.4. The PF will apply the airspeed, altitude, and heading correction as necessary after rollout on the next leg.

10.16.5. The PNF will periodically accomplish the cruise checklist to ensure all systems are functioning normally. Due to the hazards in the low-level environment, direct reference to the checklist is not required.

10.17. Hazards at Low Level:

10.17.1. When flying low level, be alert to obstructions or hazards to low-level flight. Some are obvious and may at first seem trivial, but the threats are real; and, at low altitude, little time is available to react to them.

10.17.2. Even though you have "chummed" the chart, there may be new towers that are not in the CHUM. In areas where there are many towers, it may be difficult to locate all of them visually.

10.17.3. Steep terrain is a hazard when you fail to calculate a start climb point or wait too long to start the climb.

10.17.4. Airfields are hazardous because of small, hard-to-see aircraft which may be operating from the airfields.

10.17.5. Birds can pose a very serious hazard. Check bird activity in accordance with local directives when planning any low-level flight. Do not consider wildlife areas or known migration routes as trivial. Until you have seen or experienced a bird strike, you cannot fully comprehend the damage that can be done when a bird is hit at 200+ knots. Again, the problem is being able to see the hazard in time to avoid it. Report excessive bird activity in the blind on 255.4 and also report the conditions to the SOF.

10.17.6. Another hazard is crossing special-use airspace areas that are active by NOTAMs. Restricted airspace can be particularly hazardous and must be avoided unless clearance to cross is granted by the appropriate controlling agency.

10.18. Mountainous Terrain:

10.18.1. Be aware that low-lying checkpoints or turn points can be easily hidden if you are not exactly on track. Adjust the IAS for the altitude flown. Be alert for areas of turbulence on the downwind side of large features in windy conditions and fly upwind of ridges if possible.

10.18.2. To fly safely over larger contour features, use an early pitch and power adjustment for a climb to put the aircraft at the desired AGL height as it passes over the highest contour on heading. When descending on the other side, use an appropriate power reduction to control airspeed.

10.18.3. Minimum altitude restrictions in appropriate flying publications also apply to horizontal obstacle clearance when flying in varying terrain. Refer to AFI 11-202, Volume 3; AFI 11-2T-1, Volume 3; and applicable MAJCOM publications for additional guidance on flying in mountainous terrain.

10.19. Communication Requirements:

10.19.1. When exiting the low-level route, you transition *from* the low-level area where controlling agencies do not have radar and radio contact *into* controlled airspace where radar and radio contact are required. Because radio contact may be difficult and numerous communication requirements exist, this is usually an area of confusion. Therefore, it is important to establish contact with the controlling agency (usually ARTCC or as specified in FLIP AP/1B) as soon as possible.

10.19.2. When leaving an IFR MTR, you must contact the controlling agency and receive an exit clearance. If radio contact cannot be established immediately, climb in VMC and follow flight plan altitudes and the route while continuing attempts to contact the controlling agency. If contact is not established after gaining some altitude, climb in VMC and return VFR.

10.19.3. When exiting a VFR MTR or an SR, either stay VMC and return VFR or contact the controlling agency to resume an IFR flight plan.

10.19.4. If you are unable to contact the controlling agency when leaving a low-level route, remain VMC, climb to a VFR hemispheric altitude below Class A airspace, and RTB following the filed flight plan route. Remain below 250 KIAS when you are flying below 10,000 feet AGL.

10.20. Low-Level Emergencies:

10.20.1. Any emergency encountered at low level (to include IMC) will demand a climb to a safe height above the terrain to safely analyze the situation and ensure radio contact with appropriate agencies. Be sure to refer to published lost communication and emergency procedures in FLIP for the route. If you maintain position awareness, you will know where the nearest suitable airfield or base is anywhere along the route and be able to head toward it if required.

10.20.2. If IMC cannot be avoided, immediately abort the route and climb to the computed emergency route abort altitude. The climb should be expeditious, using a precomputed MCT N_1 climb power setting and an airspeed of 250 KIAS (maximum). Immediately establish a climb on course and do not, under any circumstances, attempt to reenter the low-level route once an abort has been initiated. Because route aborts can be potentially disorienting, an immediate transition to instruments is required and close attention to aircraft control and flight parameters is essential. Continue to climb to the route-abort altitude, level off, squawk "emergency" (if appropriate), and coordinate with the controlling agency for an IFR clearance to the destination airfield.

CAUTION

The ERAA provides 1,000 feet of clearance (2,000 feet in mountainous terrain) from the highest obstacle within 25 nm of the AP/1B route center line. A climb to a higher altitude may be necessary to ensure obstruction clearance during the recovery to the destination airfield.

Section 10C—Airdrop Procedures

10.21. Airdrop Considerations. Along with flying formation at low level, it is necessary to navigate along a specific preplanned route where you will perform one or more airdrops. One of the most important aspects of the airdrop is timing. Learning to make that TOT is crucial. Arriving at the TOT depends on good navigation planning, coordination between aircraft, and precise low-level execution.

10.22. Cockpit/Crew Resource Management (CRM). In an airdrop formation, the need for CRM becomes very important for completion of the mission. Each crewmember must be fully aware of the duties required for his or her position.

10.23. Parameters. Formation airdrop in the T-1A is a day-only maneuver. The planned drop altitude will normally be 1,000 feet AGL (or 500 feet above the planned route altitude) at 140 KIAS with a 10-degree flap setting. The airdrop altitude and airspeed may be different if prebriefed prior to accomplishment. Times pertaining to low-level operations (including TOT) will be computed during mission planning. While flying the low-level route and after passing the IP, complete the slowdown maneuver and visually acquire the DZ as soon as possible. Maneuver the aircraft to attain proper alignment with the DZ center line.

10.24. Mission Plan. Use the low-level and airdrop briefing guides in AFI 11-2T-1, Volume 3, or locally produced IFG briefing guides to brief each mission. The flight lead is responsible for conducting this briefing.

10.25. En Route Navigation. The flight will perform en route navigation by flying a preplanned low-level route to the DZ. The wingman will execute all heading changes over the same geographic points as the lead, while maintaining position on the lead and following the same geographic path.

10.26. Altitude. The route will be planned at an altitude no lower than 500 feet AGL or as specified by the AP/1B route restrictions, whichever is higher. Altitude changes, when required, should be made at specific geographic points. At all times, both aircraft will constantly monitor the radio altimeter to ensure a flight no lower than 500 feet AGL or as specified.

10.27. Airspeed:

10.27.1. Airspeed for the route will be prebriefed to minimize en route communications, but may not be constant for the entire route to allow lead the flexibility to adjust speed as necessary to make the TOT.

10.27.2. Airspeed changes do not have to be announced over the radio, except for slowdown. As a technique, however, lead may want to call airspeed changes in 10-knot increments over interplane frequency; for example, "Panther plus 20." The wingman is responsible for maintaining 1,000 feet of spacing on lead throughout the route and airdrop. The wingman should monitor lead's position visually as well as electronically and anticipate airspeed changes to make the TOT.

Section 10D—Lead Airdrop

10.28. Route. The route should be planned with an IP that will allow the flight to be on course inbound to the DZ with minimum maneuvering. After passing the IP, which is located approximately 3 to 4 minutes from the DZ, lead will initiate a climbing slowdown approximately 3 to 7 nm prior to the DZ.

10.29. Slowdown. The execution of the slowdown will be completed at a predetermined geographical point or an en route time and will begin with the 500 feet climb from the en route altitude to the airdrop altitude (**Figure 10.1.**). When lead calls for the slowdown, both aircraft will simultaneously set power to idle, raise the nose to 10 degrees nose high, set flaps to 10 degrees (passing 200 KIAS), and adjust the power as required to maintain the airdrop altitude at 140 KIAS.

Figure 10.1. Slowdown.

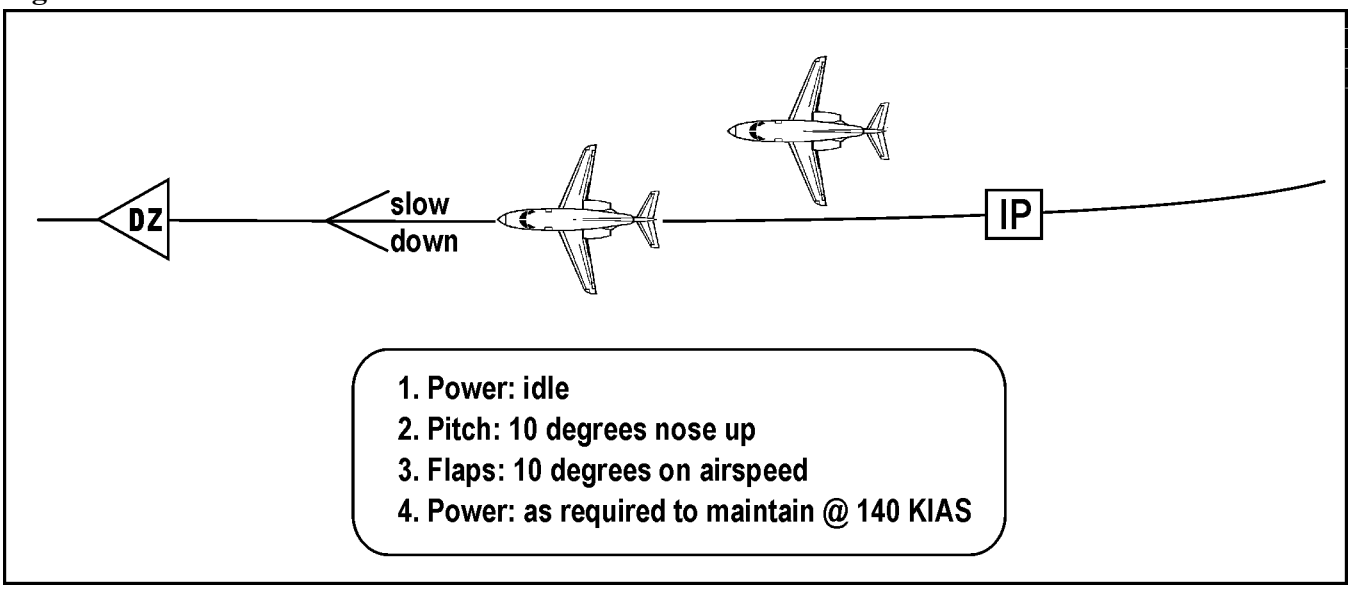

10.30. DZ Acquisition:

10.30.1. The flight lead has primary responsibility for acquiring the DZ. As part of the mission planning, the DZ size and elevation should be determined.

10.30.2. Once you pass the IP and initiate a slowdown, be prepared to visually locate the DZ and maneuver the aircraft to maintain the run-in heading to the DZ. Also be prepared to adjust for drift to maintain a proper ground track to the DZ.

10.31. Airdrop Maneuver:

10.31.1. Using a predetermined magnetic run-in heading to the DZ adjusted for wind, the airdrop will be flown at 1,000 feet AGL, 500 feet above the route altitude flown, or as briefed. This allows the flight to follow a specific run-in ground track while maintaining the drop airspeed (**Figure 10.2.**).

Figure 10.2. Airdrop Maneuver.

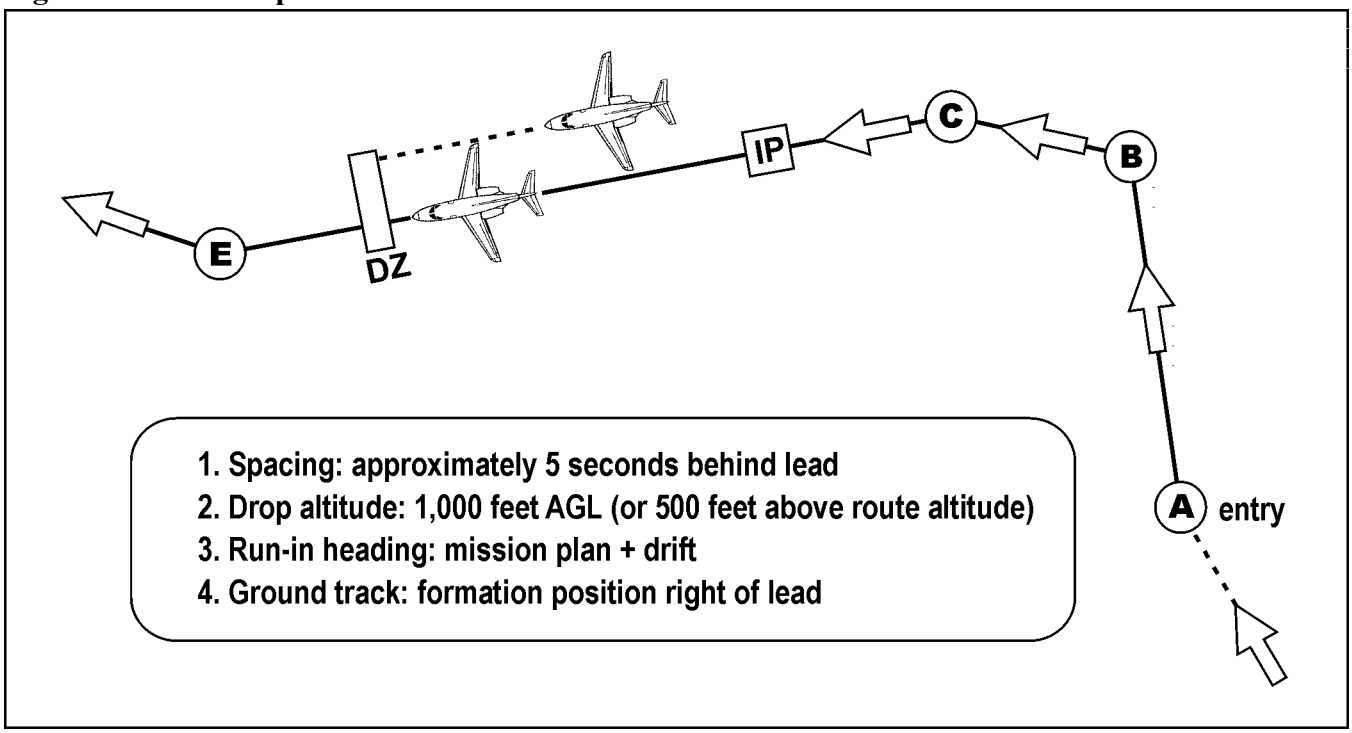

10.31.2. At TOT or overhead the DZ, lead will transmit a tone on the UHF radio or make a radio call to signal the wingman to begin timing. The execute command is the wingman's signal to begin timing and that the escape maneuver will begin in 15 seconds.

10.32. Escape. At lead's signal + 15 seconds, he or she will turn to the departure heading, raise the flaps, set power to MCT minus 5 percent N_1, and begin the descent to the low-level route. This power setting will provide the wingman a power margin to maintain position on lead. Both aircraft will descend to the en route altitude while increasing airspeed to the prebriefed airspeed (**Figure 10.3.**). The flight will then resume the low-level route and/or set up for the next airdrop maneuver.

Figure 10.3. Escape.

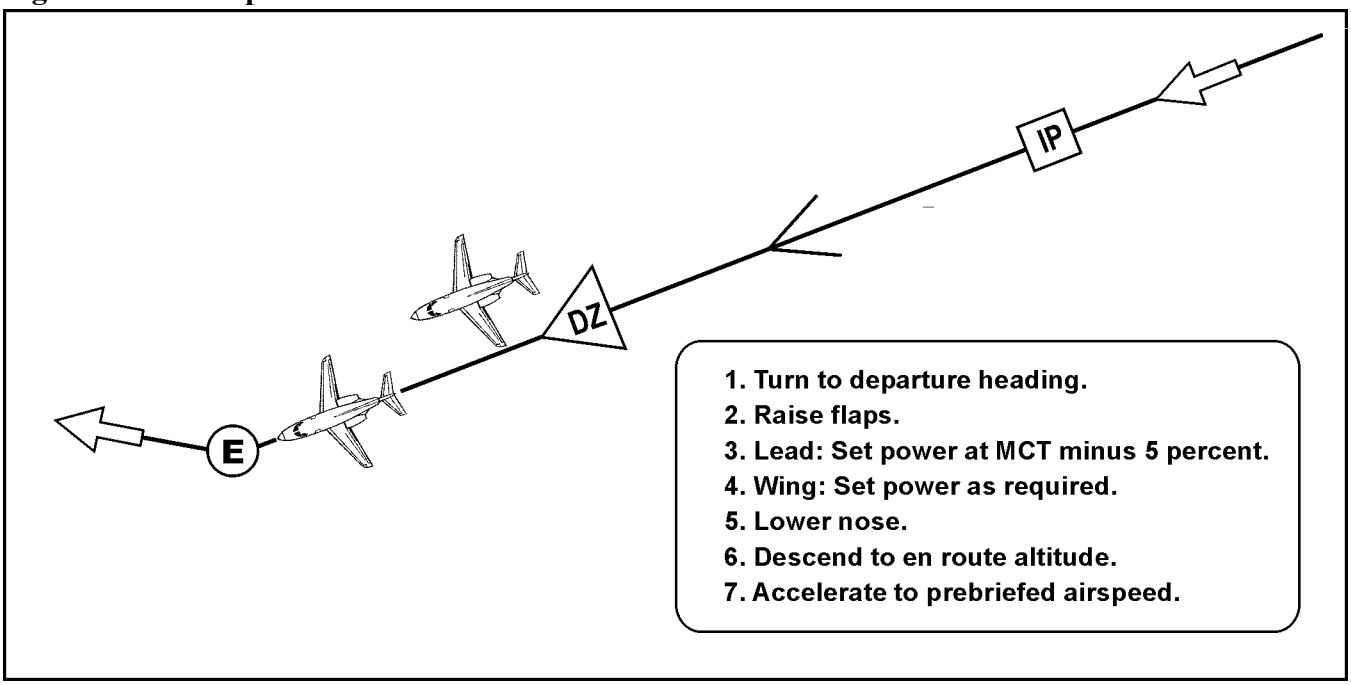

10.33. Lead Change. If the route leg length is long enough and terrain or weather avoidance is not a problem, lead may initiate a position change according to formation lead change procedures described in **Chapter 8**. The change will be initiated with a radio call from lead.

10.34. Route Exit. At this point, the formation will depart the low-level environment and climb to cruise altitude. The low-level exit checklist will be completed during this maneuver. Lead is responsible for contacting the appropriate en route control agency for clearance. The wingman is responsible for monitoring lead's transmissions and flightpath and preparing to assume lead responsibility if the situation dictates.

Section 10E—Wingman Airdrop

10.35. Altitude. The wingman is responsible for visually monitoring lead and matching altitude. At all times, both aircraft will monitor the radio altimeter to ensure the formation goes no lower than 500 feet AGL or as specified for that portion of the route. The jumpseat pilot will assist by following the progress of the mission on the route map and alerting the PF of any upcoming preplanned altitude changes.

10.36. Spacing. The wingman has several methods of judging spacing, to include tracking lead visually, using the A/A TACAN, timing lead's shadow, or timing lead's turn point.

10.37. Airdrop Maneuver. During the airdrop, the wingman will maintain the visual position and cross the DZ behind lead at the drop altitude of 1,000 feet AGL. The wingman's run-in heading is relative to lead's heading while the wingman maintains the airdrop formation position on lead.

10.38. Completion of Drop. The timing will start at lead's TOT. The wingman will continue to maintain the visual position at 140 KIAS. At the end of the 15 seconds, lead will begin the escape maneuver. Lead and the wingman will turn to the departure heading, raise flaps, advance power, and begin the descent to

the low-level route. The wingman will use power as required to maintain proper formation position, descend to the en route altitude, and accelerate to the preplanned groundspeed. The wingman will maintain the visual formation position throughout the maneuver. The flight will then resume low-level route procedures and/or set up for the next airdrop maneuver.

Section 10F—Formation Airdrop Slowdown

10.39. Communication Procedures. Normally, lead will give a "30-second to slowdown" call. The slowdown will begin with lead's call, "Panther flight, slowdown . . . now." A response from the wingman is not required. The wingman should maintain route timing as a backup to lead and anticipate slowdown at the prebriefed time or place. However, in order to maintain formation integrity, the wingman should not initiate slowdown without lead's direction. If lead is running late on timing, the slowdown may be delayed briefly to make up some lost en route time.

10.40. Slowdown Point. The actual slowdown point is normally located between the IP and the DZ and may be adjusted to compensate for winds in order to make the TOT.

Section 10G—Egress

10.41. Parameters. Because the airdrop is planned to take place along a segment of a low-level route, the egress parameters will be identical to those for route entry. The formation will descend from drop altitude into a low-level environment no lower than 500 feet AGL.

10.42. Procedures:

10.42.1. Acceleration from the airdrop will begin 15 seconds after lead's execution signal. The wingman will monitor the elapsed time from the execution signal and watch for lead to begin descent at the acceleration point. Both aircraft will advance power, raise the flaps, lower the nose slightly, and accelerate to en route groundspeed. Lead will set power to MCT -5 percent N_1 to provide the wingman with a power advantage. Once established at the appropriate groundspeed, both aircraft will use power as required to maintain en route groundspeed.

10.42.2. Once established back on route altitude, the aircraft will continue to the route exit point as prebriefed. At the IP's discretion, the airdrop slowdown and run-in maneuver may be repeated along another segment of the route, but this must have been prebriefed.

Section 10H—Low-Level Route Abort Procedures

10.43. Responsibilities:

10.43.1. In the event the formation has to abort the route due to weather, etc., lead will climb to the appropriate altitude and coordinate for route abort and appropriate clearances. In the event the wingman loses sight of lead during a route abort, lead will climb to the ERAA. The wingman will climb to ERAA plus 1,000 feet, initiate lost wingman procedures, and attempt to get 1-mile spacing. Both aircraft will use MCT during the climb. ***WARNING:*** The wingman is responsible for avoiding obstacles while performing the lost wingman procedure. <u>He or she must remain situationally aware at all times.</u>

10.43.2. Lead will ensure separation and use MCT during the climb. The wingman will also use MCT for climb power until well separated from lead. Once obstacle clearance is assured, the wingman may set power as required to attain 1-mile spacing.

10.43.3. Lead will coordinate for route abort and appropriate clearances.

Section 10I—Conclusion

10.44. A Final Warning. Flying jet aircraft on low-level missions is a deadly serious business. You are flying at high speeds close to the ground in a very high-threat environment. Although the threat may not be enemy aircraft or air defense weaponry, it is just as real and can be just as deadly. Remember, the margin for error and the time available to react have been greatly reduced due to the very close proximity of the ground.

10.45. Preflight Planning and Briefings. In addition, thorough preflight planning and preflight briefings are imperative for safe and effective low-level training. Use the low-level briefing guide in AFI 11-2T-1, Volume 3, for single-ship, low-level navigation and/or the airdrop briefing guide for formation airdrop missions.

Section 10J—Administrative Information

10.46. Forms Adopted. AF Forms 70 and 847.

RONALD E. KEYS, Lt General, USAF
DCS/Air & Space Operations

Attachment 1

GLOSSARY OF REFERENCES AND SUPPORTING INFORMATION

References

AFI 11-2T-1, Volume 1, *T-1A Aircrew Training*

AFI 11-2T-1, Volume 2, *T-1A Aircrew Evaluation Criteria*

AFI 11-2T-1, Volume 3*, T-1A Operations Procedures*

AFI 11-205, *Aircraft Cockpit and Formation Flight Signals*

AFI 11-214, *Air Operations Rules and Procedures*

AFMAN 11-217, Volumes 1 and 2, *Instrument Flight Procedures*

AETC/TRSS Handbook 11-1, *Navigation for Pilot Training* (at the following Web site: **http://trss3.randolph.af.mil/bookstore//general.htm**, under Nav4Pilots)

TO 1T-1A-1, *Flight Manual, USAF Series T-1A Aircraft*

TO 1T-1A-1-1, *Appendix 1, Performance Data, Flight Manual, USAF Series T-1A Aircraft*

TO 1T-1A-1CL-1, *Pilot's Abbreviated Flight Crew Checklist, T-1A Aircraft*
Flight Information Publications (FLIP)

Area Planning (AP), including AP/1 and AP/1B

Terminal Approach Books

General Planning

Flight Information Handbook

Airman's Information Manual

Chart Update Manual (CHUM)

Abbreviations and Acronyms

A/A—air to air

AGL—above ground level

AOA—angle of attack

AOB—angle of bank

ARCP—air refueling control point

ARCT—air refueling control time

ARIP—air refueling initiation point

ARTCC—air route traffic control center

ASR—airport surveillance radar

ATC—air traffic control

ATIS—automated terminal information service

CR—communication rendezvous

CRM—cockpit/crew resource management

DH—decision height

DME—distance measuring equipment

DR—dead reckoning

DZ—drop zone

EADI—electronic attitude direction indicator

E A/R—end air refueling (point)

EHSI—electronic horizontal situation indicator

EFIS—electronic flight instrument system

ERAA—emergency route abort altitude

ETA—estimated time of arrival

FAF—final approach fix

FL—flight level

FLOLS—frensnel lens optical landing system

FMS—flight management system

FSS—flight service station

IAS—indicated airspeed

IFF—identification friend or foe

IFG—in-flight guide

IFR—instrument flight rules

ILS—instrument landing system

IMC—instrument meteorological conditions

IP—instructor pilot, initial point

KIAS—knots indicated airspeed

LOC—localizer

MAP—missed approach point

MARSA—military assumes responsibility for separation of aircraft

MCT—maximum continuous thrust

MDA—minimum descent altitude

MOA—military operating area

MTR—military training route

MSL—mean sea level

N_1—fan rpm indication

NAVAID—navigational aid

NDB—nondirectional beacon

nm—nautical mile

NOTAM—notice to airmen

PAR—precision approach radar

PAPI—precision approach path indicator

PF—pilot flying

PMSV—pilot-to-metro service

PNF—pilot not flying

RA—resolution advisory

RPI—runway point of intercept

RTB—return to base

S_1—decision speed

SCA—standard closing angle

SID—standard instrument departure

SOF—supervisor of flying

SR—slow-speed low-altitude training route

STBY—standby

SUP—squadron supervisor

SUPT—specialized undergraduate pilot training

TACAN—tactical air navigation

TAS—true airspeed

TCAS—traffic alert and collision avoidance system

TOLD—takeoff and landing data

TOT—time over target

TPC—tactical pilotage chart

TRT—takeoff rated thrust

UHF—ultra high frequency

V_{ac}—(V_{ref}+22)

V_{app}—approach speed

VASI—visual approach slope indicator

V_{co}—climbout speed

VDP—visual descent point

VFR—visual flight rules

VHF—very high frequency

VMC—visual meteorological conditions

VOR—very high frequency omnidirectional range station

VORTAC—very high frequency omnidirectional range station and/or tactical air navigation

V_{ref}—reference speed

V_{rot}—rotation speed

VSI—vertical speed indicator

YD—yaw damper

Attachment 2

IC 2004-1 TO AFMAN 11-247, T-1A FLYING FUNDAMENTALS

4 JUNE 2004

SUMMARY OF REVISIONS

This interim change (IC) adds guidance for the yaw damper (YD) failure demonstration (paragraph **3.3.2.5.**); adds a further responsibility for lead when the wingman calls "blind" (paragraph **8.2.3.2.**); clarifies the visual formation position (paragraph **8.12.1.**) and the offset position (paragraph **8.12.2.**); adds "blind" (paragraphs **8.2.4.1.** and **8.13.2.1.**), "knock it-off" (paragraph **8.12.10.**), and "terminate" (paragraph **8.12.11.**) calls for formation maneuvering; clarifies formation configuration and pattern entry procedures (paragraph **8.17.1.3.**); and updates **Attachment 1**. See the last attachment for the complete IC. A (|) indicates revision from the previous edition.

OPR: HQ AETC/DOFV

(Lt Col Victor Rick)

Certified by: HQ USAF/XOO

(Brig Gen Teresa M. Peterson)

3.3.2.5. With the YD disengaged, apply sufficient rudder deflection (either to the left or right) to displace the aircraft from straight-and-level flight. Then rapidly release the rudder, allowing it to return to neutral. Note the oscillations without the yaw damper. Ensure oscillations are minimized before engaging the YD. Engage the YD. Reapply sufficient rudder deflection, rapidly release the rudder, and observe minimal oscillations.

4.6.4.1. Roll out on the inside downwind and adjust the power as required to maintain minimum airspeed for flap setting. If necessary, establish a crab to obtain a displacement of approximately 1 to 1 1/2 miles from the runway (fuel filler cap on the runway, no wind). Maintain altitude while configuring by lowering 10-degree flaps and the landing gear. Maintain 10 KIAS above the minimum for your configuration.

8.2.3. Lead:

8.2.3.1. Clearing and planning are important aspects of leading a formation. Lead must know the capabilities of the wingman and smoothly perform all maneuvers within those capabilities. However, lead should never become so concerned with smoothness that aircraft control or safety is compromised.

8.2.3.2. If the wingman calls "blind," lead will acknowledge the call, maintain a predicable flightpath, and be directive to ensure altitude separation.

8.2.4.1. In visual formation, keep lead in sight at all times. If the crew loses sight of lead, the wingman will maneuver the aircraft away from lead's last known position and call "blind" with *"(altitude)."* Follow lead's directions to ensure altitude separation. If in IMC, initiate lost wingman procedures.

8.10.2.1. Lead will coordinate the clearance for the feed-on formation takeoff. When cleared, he or she will take position on the appropriate side of the runway (**Figure 8.4.**) and perform a rolling takeoff.

8.12.1. **Visual Position:**

8.12.1.1. The basic visual formation position for the wingman is approximately 600 to 700 feet behind and 200 to 300 feet to the right, out of lead's jetwash (**Figure 8.5.**). To maintain the proper position use the following visual references, the wingman should:

8.12.1.1.1. Be close enough to easily read the letters on the tail, but just barely make out the tail numbers.

8.12.1.1.2. Superimpose the right engine intake on lead's emergency exit hatch. The stinger light should be seen in the tail cone of the left engine. The bottom of the left engine should rest tangent on the left wing.

8.12.1.1.3. As a *backup,* use approximately .2 DME.

8.12.1.2. Lead may direct the wingman to be on the left side as required. The wingman will maintain the side assigned by lead.

Figure 8.5. Visual Formation Position.

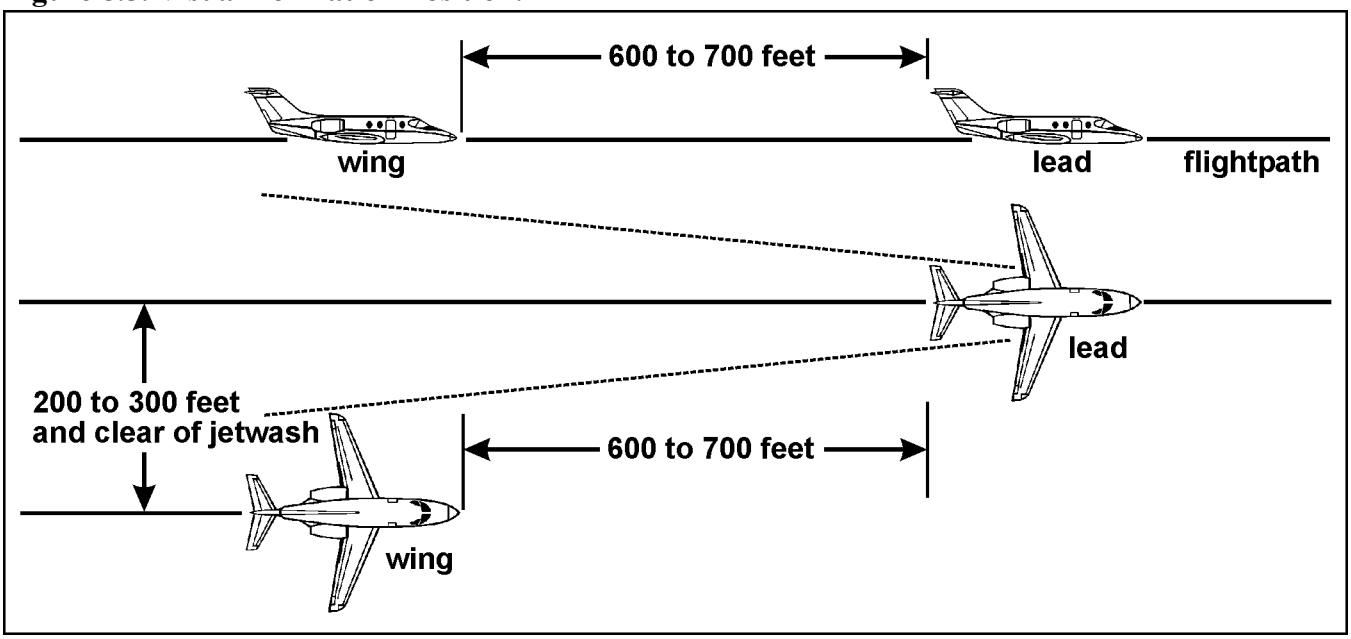

8.12.2. Offset Position. The offset position for the wingman is 600 to 4,000 feet (approximately .2 to .8 DME) of spacing (**Figure 8.6.**). This allows the wingman to use visual references to determine the inner limit of the offset position. The wingman may fly on either side of lead, from the in-trail position up to line abreast. The offset position is fluid in nature, but the optimum position is in a 30- to 45-degree cone on either side of lead. The wingman may maneuver from side to side or farther back to optimize clearing. The wingman's position is chosen to optimize clearing, avoid terrain and obstacles, and/or position for the next turn or a prebriefed threat.

Figure 8.6. Offset Position.

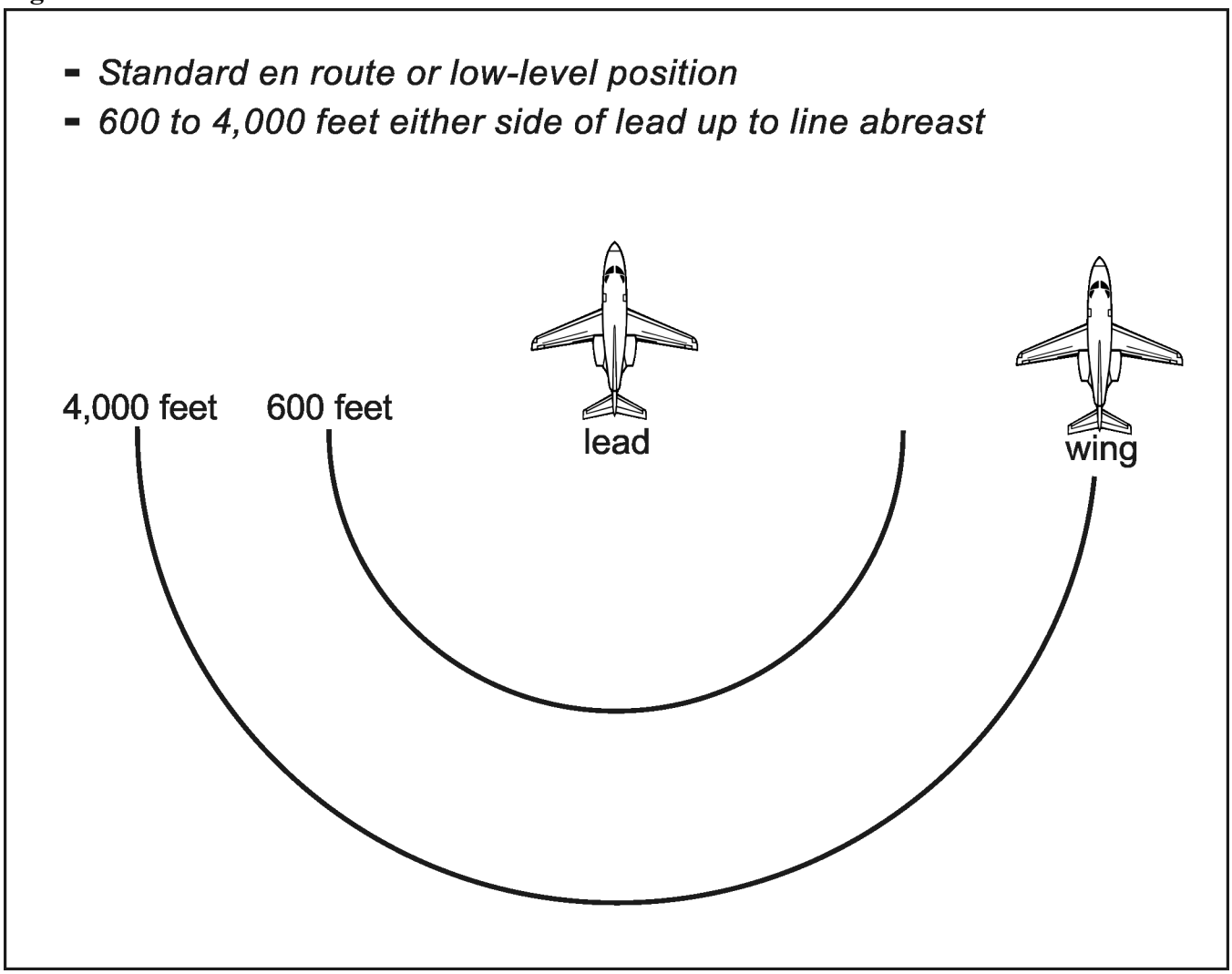

8.12.3.3. Wingman Offset Position. Follow lead while maintaining a 30- to 45-degree aspect wedge position (**Figure 8.8.**). The visual reference for 45 degrees is placing lead's wingtip on his or her nose. Putting lead's stall fence (halfway down the wing) on lead's nose is the reference for 30 degrees. Anticipate lead's turns to avoid obstructing formation maneuvering. This may involve collapsing toward lead's 6-o'clock position or switching sides to maintain the proper spacing. Ensure slight vertical spacing to avoid flying through lead's jetwash when crossing from one side to the other.

Figure 8.8. Offset Turns.

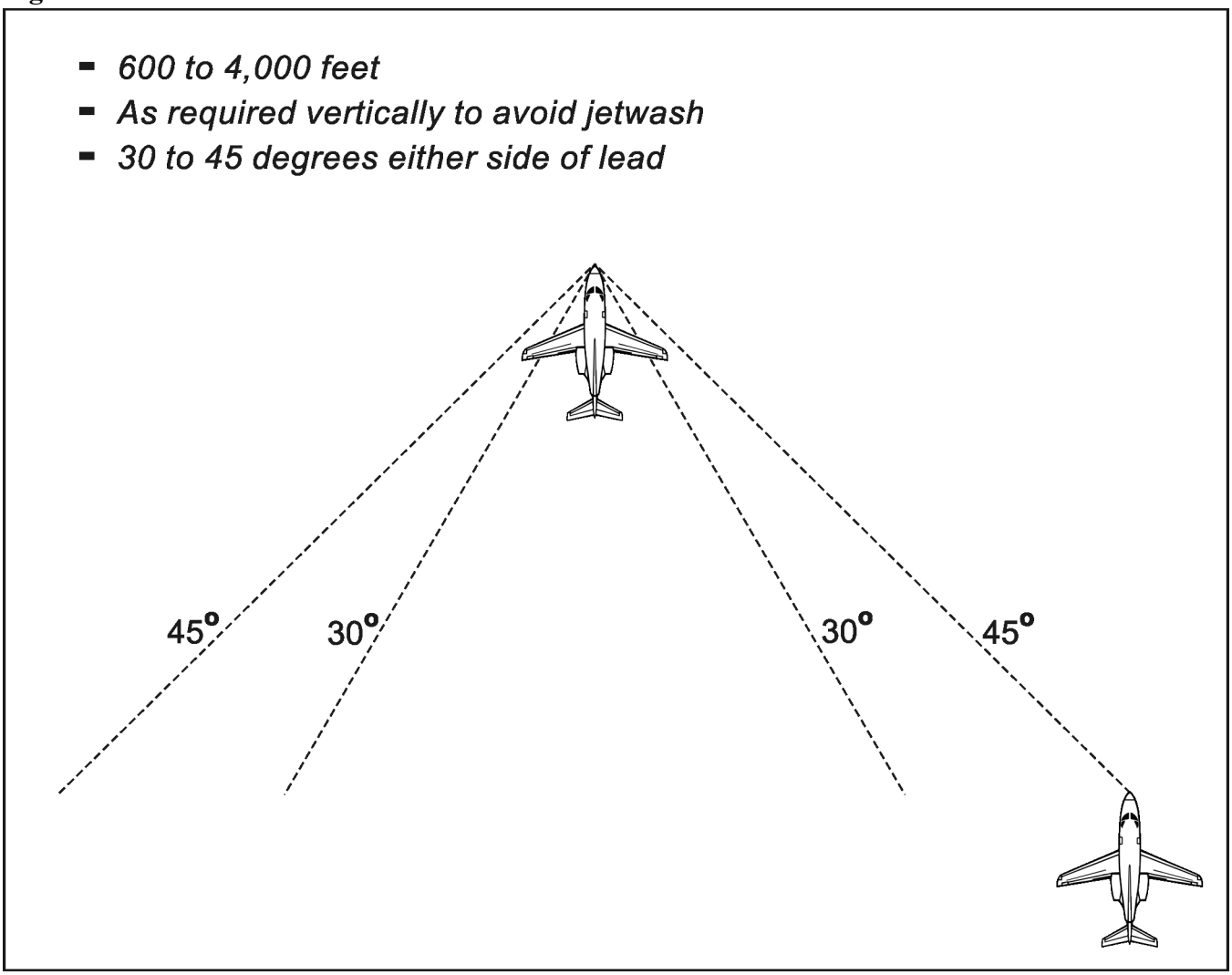

8.12.6. **Offset Maneuvering Exercise:**

8.12.6.1. The offset maneuvering position for the wingman is 600 to 4,000 feet (approximately .2 to .8 DME) of spacing, either side of lead up to line abreast.

8.12.6.2. Lead will initiate by transmitting, "Panther 2, go offset maneuvering." Wing will acknowledge with "2."

8.12.6.3. After the wingman is established in position and sets 80 percent N_1, the wingman will call "Panther 2's in." Lead will set power at 80 percent N_1 and begin a series of predictable turns with no more than 45 degrees of bank and ± 20 degrees of pitch. Lead's airspeed is limited to no lower than 180 KIAS and no higher than 260 KIAS. Lead should try to keep the aircraft's nose tracking by maintaining back pressure on the control yoke. The wingman should strive to maintain the 30- to 45-degree cone by using lead and lag pursuit.

8.12.6.4. The wingman will demonstrate the ability to maneuver in the offset position and stabilize the aircraft at various points within the cone. The objective is not to maintain one constant position. The wingman should consider turning ignition switches on during this maneuver.

8.12.8.2. Wingman. As wingman, maneuver to a position directly behind and slightly below lead. Then accelerate to the desired overtake speed (approximately 30 to 40 knots of overtake) and monitor that speed during the rejoin. Fly directly toward lead's 6-o'clock position until approximately 0.4 DME. Then turn slightly away from lead, aiming for the visual formation position on the side directed by lead. This will give you a vector away from lead in case an overshoot occurs. As references on lead's aircraft become visible, gradually decrease the closure rate to arrive at the visual formation position. Be prepared to use idle power and speed brakes, if required. However, do not rely on the speed brake to quickly decrease closure.

8.12.10. Knock-It-Off: (***NOTE:*** Refer to AFI 11-214, *Air Operations Rules and Procedures,* for additional information.)

8.12.10.1. Any formation crewmember may call "knock-it-off" to cease maneuvering when safety of flight is a factor or where doubt or confusion exists. Initiation of a knock-it-off call will start with the flight call sign; for example, "Bend 51, knock-it-off." Then both flight members will transmit their position number, in order, in the following format: "Bend 1, knock-it-off," "Bend 2, knock-it-off." If any flight member fails to respond correctly, the sequence should be initiated again.

8.12.10.2. Upon hearing a knock-it-off call, all participating aircraft will clear their flightpath, cease maneuvering, climb or descend to a prebriefed safe altitude, and acknowledge with their call sign. Lead will maintain a predictable flightpath and will be directive before resuming maneuvering. He or she will direct a rejoin once safety of flight is ensured. The wingman will maintain positive aircraft separation and visual contact with lead while waiting for lead's direction.

8.12.11. Terminate: (***NOTE:*** Refer to AFI 11-214 for additional information.)

8.12.11.1. Any formation crewmember may call "terminate" to cease maneuvering when safety of flight is not a factor or when desired learning objectives have been achieved. Terminate procedures should be used when the wingman is too far out of position, which would result in ineffective training.

8.12.11.2. Initiation of a terminate call will start with the flight call sign; for example, "Bend 51, terminate." Flight members transmitting their position number, in order, in the following format: "Bend 1, Terminate," "Bend 2, Terminate." If any flight member fails to respond correctly, the sequence should be initiated again.

8.12.11.3. Upon hearing a terminate call, participating aircraft will clear their flightpath, cease maneuvering, and acknowledge with their call sign. Lead will maintain a predictable flightpath and will be directive before resuming maneuvering. The wingman will maintain positive aircraft separation and visual contact with lead while waiting for lead's direction.

8.13.2.1. The wingman is responsible for maintaining a cell position using A/A TACAN. The standard cell position places the wingman 1 nm in trail and 500 feet above lead's altitude (**Figure 8.9.**). Back up lead in navigation by checking position, ground track, airspeed, clearances, communications, and turn points. Be prepared to assume the lead position and responsibilities at any time during the flight. If the wingman loses sight of lead, the wingman will call "blind" with *"(altitude)."* Lead will acknowledge the call, maintain a predictable flightpath, and be directive to ensure altitude separation. If IMC is encountered, the wingman will perform the appropriate lost wingman procedures.

8.13.2.2. Heading changes are performed in the same way as visual formations change heading. Both aircraft will execute the turn at approximately the same point in the air with the wingman maintaining lead's general flightpath. The wingman will use timing (based on true airspeed) to determine when to begin a turn. **Table 8.1.** may be used as a guide for timing estimates in cell formation.

Table 8.1. Wingman Turn Delay for Cell Formation.

ITEM	A	B
	True Airspeed	Time (Seconds)
1	150	24
2	200	18
3	250	14
4	300	12
5	400	9
6	450	8

8.17.1.1. Lead will contact approach control or the tower to request a formation downwind entry into the pattern. Depending on the formation's location relative to the field, lead may request either a 45-degree dogleg entry or a direct (straight) entry to the inside downwind (**Figure 8.11.**).

Figure 8.11. Formation Downwind Entry.

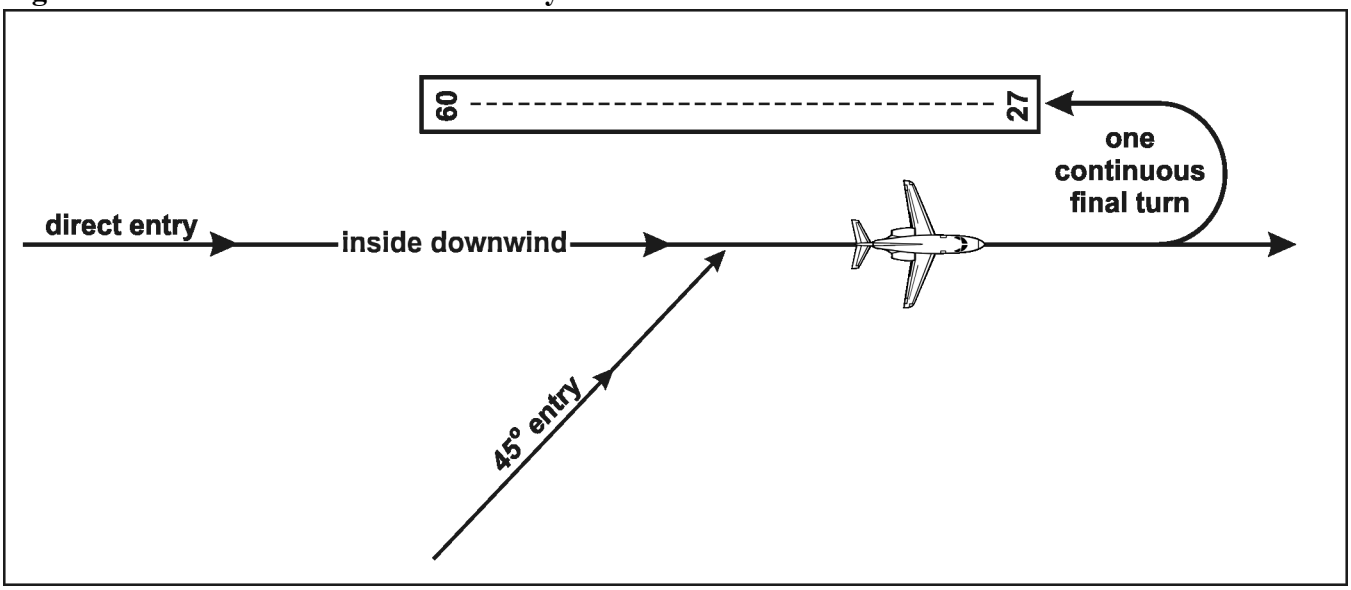

8.17.1.3. Lead will announce airspeed and configuration changes with a radio call. When abeam the touchdown zone, he or she will configure the aircraft with landing gear, lower 10 degrees of flaps, and slow to V_{app} + 10 KIAS. At the normal overhead pattern turn point (perch), lead will configure with 30 degrees of flaps and roll off the perch. When a minimum of 6,000 feet of threshold spacing will exist, the wingman will confirm final configuration and roll off the perch. As a technique to achieve 6,000 feet of spacing, the wingman should wait until lead is approximately three-quarters of the way through the final turn.

9.6.2.3. To assist the receiver in situational awareness, the tanker pilot will call when halfway through the turn.

9.7.3.2. Although the turn range is the tanker's responsibility, the receiver should monitor the tanker's position and range. For primary tracking of the tanker, the receiver will use the A/A TACAN and TCAS as a backup. The receiver pilot will cross-check navigation and tracking at the tanker's "10 miles to the turn," "in the turn," and "halfway through the turn" calls to determine if the tanker is positioned properly for the rendezvous.

10.37. Airdrop Maneuver. During the airdrop, the wingman will maintain the visual position and cross the DZ behind lead at the drop altitude of 1,000 feet AGL. The wingman's run-in heading is relative to lead's heading while the wingman maintains the airdrop formation position on lead.

10.38. Completion of Drop. The timing will start at lead's TOT. The wingman will continue to maintain the visual position at 140 KIAS. At the end of the 15 seconds, lead will begin the escape maneuver. Lead and the wingman will turn to the departure heading, raise flaps, advance power, and begin the descent to the low-level route. The wingman will use power as required to maintain proper formation position, descend to the en route altitude, and accelerate to the preplanned groundspeed. The wingman will maintain the visual formation position throughout the maneuver. The flight will then resume low-level route procedures and/or set up for the next airdrop maneuver.

Attachment 1

GLOSSARY OF REFERENCES AND SUPPORTING INFORMATION

References

AFI 11-2T-1, Volume 1, *T-1A Aircrew Training*

AFI 11-2T-1, Volume 2, *T-1A Aircrew Evaluation Criteria*

AFI 11-2T-1, Volume 3*, T-1A Operations Procedures*

AFI 11-205, *Aircraft Cockpit and Formation Flight Signals*

AFI 11-214, *Air Operations Rules and Procedures*

AFMAN 11-217, Volumes 1 and 2, *Instrument Flight Procedures*

AETC/TRSS Handbook 11-1, *Navigation for Pilot Training* (at the following Web site: **http://trss3.randolph.af.mil/bookstore//general.htm**, under Nav4Pilots)

TO 1T-1A-1, *Flight Manual, USAF Series T-1A Aircraft*

TO 1T-1A-1-1, *Appendix 1, Performance Data, Flight Manual, USAF Series T-1A Aircraft*

TO 1T-1A-1CL-1, *Pilot's Abbreviated Flight Crew Checklist, T-1A Aircraft*

Flight Information Publications (FLIP)

- Area Planning (AP), including AP/1 and AP/1B
- Terminal Approach Books
- General Planning
- Flight Information Handbook

Airman's Information Manual

Chart Update Manual (CHUM)

Abbreviations and Acronyms

A/A—air to air

AGL—above ground level

AOA—angle of attack

AOB—angle of bank

ARCP—air refueling control point

ARCT—air refueling control time

ARIP—air refueling initiation point

ARTCC—air route traffic control center

ASR—airport surveillance radar

ATC—air traffic control

ATIS—automated terminal information service

CR—communication rendezvous

CRM—cockpit/crew resource management

DH—decision height

DME—distance measuring equipment

DR—dead reckoning

DZ—drop zone

EADI—electronic attitude direction indicator

E A/R—end air refueling (point)

EHSI—electronic horizontal situation indicator

EFIS—electronic flight instrument system

ERAA—emergency route abort altitude

ETA—estimated time of arrival

FAF—final approach fix

FL—flight level

FLOLS—frensnel lens optical landing system

FMS—flight management system

FSS—flight service station

IAS—indicated airspeed

IFF—identification friend or foe

IFG—in-flight guide

IFR—instrument flight rules

ILS—instrument landing system

IMC—instrument meteorological conditions

IP—instructor pilot, initial point

KIAS—knots indicated airspeed

LOC—localizer

MAP—missed approach point

MARSA—military assumes responsibility for separation of aircraft

MCT—maximum continuous thrust

MDA—minimum descent altitude

MOA—military operating area

MTR—military training route

MSL—mean sea level

N_1—fan rpm indication

NAVAID—navigational aid

NDB—nondirectional beacon

nm—nautical mile

NOTAM—notice to airmen

PAR—precision approach radar

PAPI—precision approach path indicator

PF—pilot flying

PMSV—pilot-to-metro service

PNF—pilot not flying

RA—resolution advisory

RPI—runway point of intercept

RTB—return to base

S_1—decision speed

SCA—standard closing angle

SID—standard instrument departure

SOF—supervisor of flying

SR—slow-speed low-altitude training route

STBY—standby

SUP—squadron supervisor

SUPT—specialized undergraduate pilot training

TACAN—tactical air navigation

TAS—true airspeed

TCAS—traffic alert and collision avoidance system

TOLD—takeoff and landing data

TOT—time over target

TPC—tactical pilotage chart

TRT—takeoff rated thrust

UHF—ultra high frequency

V_{ac}—(V_{ref} +22)

V_{app}—approach speed

VASI—visual approach slope indicator

V_{co}—climbout speed

VDP—visual descent point

VFR—visual flight rules

VHF—very high frequency

VMC—visual meteorological conditions

VOR—very high frequency omnidirectional range station

VORTAC—very high frequency omnidirectional range station and/or tactical air navigation

V_{ref}—reference speed

V_{rot}—rotation speed

VSI—vertical speed indicator

YD—yaw damper