AIR FORCE HANDBOOK 10-222, Volume 6
1 April 1999

GUIDE TO BARE BASE FACILITY ERECTION

DEPARTMENT OF THE AIR FORCE

BY ORDER OF THE SECRETARY OF THE AIR FORCE

AIR FORCE HANDBOOK 10-222, VOLUME 6
1 APRIL 1999

Operations

GUIDE TO BARE BASE FACILITY ERECTION

NOTICE: This publication is available digitally on the AFDPO/PPP WWW site at http://afpubs.hq.af.mil. If you lack access, contact your Publishing Distribution Office (PDO).

OPR: HQ AFCESA/CEXR (Major Gregory A. Cummings)
Certified by: HQ AFCESA/CEX (Colonel Bruce F. Mc Connell)
Pages 90/Distribution F

This handbook is designed to assist you to erect and strike the most common types of Harvest Falcon bare base facilities. These include the TEMPER tent, expandable shelter container and general purpose shelter. The handbook discusses site selection and layout, major components of each facility, erection procedures and disassembly procedures. When coupled with information contained in AFPAM 10-219, Vol. 5, Bare Base Conceptual Planning Guide, applicable technical orders, and instruction received at Silver Flag training sites, personnel should be capable of effectively setting up a bare base facility complex.

Page

INTRODUCTION 5
TEMPER TENT 7
EXPANDABLE SHELTER CONTAINER 40
GENERAL PURPOSE SHELTER 51

Figures

1. TEMPER Tent 7
2. TEMPER Tent Fabric Components 8
3. TEMPER Tent Frame Components 9
4. Ridge and Eave Extenders 10

5. Fabric Plenums 10
6. Vestibule 11
7. Rowley Box 12
8. Ship/Store Containers 12
9. Ridge Joint Assembly 14
10. Header Assembly 14
11. Purlin-to-Arch Connection 15
12. Diagonal Brace-to-Arch Connection 16
13. Rotation of Tab Handle to Lock Tab Into Arch 16
14. Locking of Tab Handle 17
15. Assembled TEMPER Tent Frame 17
16. Large Grommet Placed Over Ridge Joint Spindle 18
17. Typical Lacing Pattern 19
18. Closing of Velcro Weather Flap 20
19. Placement of End Wall Peak Grommet 21
20. Installation of Ridge Extenders 21
21. Lacing of Tent Fly 22
22. Placement of Tent Fly Over Ridge Extenders 22
23. Installation of Eave Extenders 23
24. Placement of Tent Fly Over Eave Extenders 24
25. Attachment of Guy Rope to Tent Fly 24
26. Attachment of Guy Rope to Eave And Ridge Extenders 25
27. Raising of Tent Frame Assembly 26
28. Eave Joint Assembly 26
29. Securing Purlin Flaps 27
30. Sod Cloth Placement 28
31. Guy Ropes 28
32. Flooring Section Installation 29
33. Electrical Cable Routing 30
34. Light Support Strap Assemblies 31
35. Overhead Liner Connections 31
36. Plenum Connection to Ventilation Sleeve 32
37. Electrical Distribution Box Stand 33
38. Installation of Light Fixtures 34

39. Vestibule Frame Assembly 36
40. Vestibule Frame Installation 36
41. Vestibule Final Assembly 37
42. Expandable Shelter Container 41
43. Installation of Corner Jacks 42
44. Leveling Center Section 42
45. Raising of Roof Panel 43
46. Safety Cable Attachment 44
47. Raising of End Wall 44
48. Positioning of Swing-out Side Walls 45
49. Final Positioning of Expanded Section 45
50. Anchor Cable Layout 47
51. Environmental Control Unit Installation 48
52. General Purpose Shelter 51
53. General Purpose Shelter Shipping Container 52
54. Basepads, Beams and Panels 53
55. End Wall Components 54
56. Layout Plan for GP Shelter 56
57. Component Layout Diagram 57
58. Basepad Layout 59
59. Basepad Anchoring 60
60. Anchor Cable Tensioning 62
61. Panel-to-Arch Beam Connection 63
62. Beam-to-Beam Pin Connection 64
63. Pinning of Panel to Basepads 65
64. Erection Track Placement 66
65. Placement of Panel Sections Prior to Erection 67
66. Winch Hoist and Harness Assembly 68
67. Breached Panel Section 69
68. GP Shelter Windows 69
69. GP Shelter Mechanical Connection Panel 70
70. Bare Base Environmental Control Unit Attached to GP Shelter 70
71. Spacer Bar Attachment 71
72. Interior Electrical System Component Positioning 73
73. Lighting Fixture Cable Run 74

74. Interior Electrical System Schematic Diagram 75
75. Ridge Flashing Installation 76
76. Column Attachment to Arch Beam 77
77. Installation of Header 77
78. L2/LU-2 Column Connection 78
79. Upper Panel Section Placement 79
80. Door Assembly 80
81. Door Hinge Mounting Bolts and Column Mounting Inserts 81
82. Door Flashing Attachment 82
83. Attaching End Wall Flashing to End Wall Panels 82
84. Arch Counterflashing Attachment 84
85. Installation of Ground Skirt Flashing 85
86. Pulling Shear Stakes 90

INTRODUCTION

GUIDE TO BARE BASE FACILITY ERECTION

PURPOSE OF HANDBOOK

This handbook addresses the procedures used to erect and disassemble the Harvest Falcon TEMPER tent, expandable shelter container (ESC) and general purpose (GP) shelter. It is meant to be used by civil engineering personnel in setting up their quarters and work centers and assisting other base personnel in establishing their shop areas. Users of this booklet are assumed to have a basic knowledge of bare base assets and their function—readers without this fundamental knowledge should review the applicable technical orders; AFPAM 10-219, Volume 5, Bare Base Conceptual Planning Guide; AFH 10-222, Volume 1, Guide To Bare Base Development; and AFH 10-222, Volume 2, Guide To Bare Base Assets.

Information contained in this handbook is drawn from the following sources:

TO 35E5-6-1, Tent, Extendable, Modular

TO 35E4-94-1, Expandable Shelter/Container

TO 35E4-132-1, General Purpose Shelter

The three facility types discussed in this handbook comprise the majority of mobile facilities contained in the four Harvest Falcon deployment sets (housekeeping, industrial operations, initial flightline support, follow-on flightline operations). TEMPER tents are by far the most numerous with approximately 425 of them used to support a typical three aircraft squadron beddown operation. Next most plentiful is the ESC with about 30 units, followed by the GP Shelter with approximately 25 facilities.

Fortunately, the TEMPER tent, while being the most populous, is the easiest to erect. Although all base personnel are supposed to be able to erect this shelter, be prepared to provide assistance at least in a supervisory mode. In all likelihood; however, you will have to erect some of these tents for other people. Plan on having to erect all ESCs and GP shelters as they arrive. Few folks other than engineers have access to these buildings in peacetime for training purposes. If you are lucky, some aircraft maintenance people who have had experience with these assets will be part of your deployment and can help out. Remember to practice proper safety procedures during the erection of all facilities—use gloves, safety shoes, etc., to protect yourself and those around you.

TEMPER TENT

Characteristics.
The TEMPER tent (figure 1) is a modular soft-walled shelter consisting mainly of a synthetic material fabric supported by an aluminum frame structure. Its modular construction allows many different facility sizes. The basic tent module measures 8' by 20'. These modules are connected together to form various configurations, the most common being the 32' by 20' billeting version. This basic billeting unit weighs about 1200 pounds. TEMPER tents are used for several other functions besides billeting. These include latrines, administrative offices, shops, kitchens, shower/shave units and medical facilities. TEMPER tents are meant to be used in desert, tropical and temperate climates and come in both desert tan and forest green colors. Utility support for these tents includes electrical service for lighting and convenience outlets and provisions for heating and cooling using the bare base environmental control unit or the new field deployable environmental control unit.

Figure 1. TEMPER Tent.

Major Components.
The TEMPER tent has many major components. Only the most common ones will be addressed in this handbook. You should consult the TEMPER tent technical order for expanded details.

Fabric. The major fabric components include the window section, end section, door section and fly (figure 2). Both the window and door sections are 8-feet wide, enough to cover one section of tent frame. The end section contains door and window openings and spans the 20' dimension of the tent. The fly covers the roof of the tent and provides insulating support.

Figure 2. TEMPER Tent Fabric Components.

Frame. The TEMPER tent metal frame (figure 3) consists of arches, ridge joints, headers and purlins that are pinned together to form a rigid structure.

Ridge Extenders (figure 4). Ridge extenders are attached to the ridge points of the frame structure to hold up the fly.

Eave Extenders (figure 4). These items are attached to the eave of the frame structure to hold up the fly.

Liner. The tent liner, installed inside the tent, provides insulation value and helps keep the inside of the tent clean.

Fabric Plenums (figure 5). These fabric ducts are hung inside the tent to channel heated and cooled air from the environmental control unit.

Vestibule (figure 6). The vestibule is a covered entranceway into a tent or a covered passageway between tents.

Electrical Control Box. This electrical box is mounted inside the tent and connects the external power supply to the internal lights and outlets.

Figure 3. TEMPER Tent Frame Components.

Figure 4. Ridge and Eave Extenders.

Figure 5. Fabric Plenums.

Figure 6. Vestibule.

Site Preparation.
Site preparation for the TEMPER tent is not an extensive requirement. The area the tent is to be placed upon should be relatively level, well drained, and free from debris such as stones, roots and underbrush. Obviously, the tents should not be placed in a location subject to jet blast or high winds.

Component Layout.
TEMPER tents are packaged for shipment in two types of containers. The Rowley box (figure 7) holds one tent and the Ship/Store Container (figure 8) contains four. As you unpack the containers, make a quick inventory of the contents to ensure all major items are there. Place the components along the edge of the tent site in the order they will be used. Normally the components will be laid out as follows:

Line up each frame bundle along the site edge.

Place the window sections between frame sections.

Place end walls at each end of tent.

Figure 7. Rowley Box

Figure 8. Ship/Store Container.

Place fly at every other window section.

Place intermediate liners next to window sections

Place end section liners next to end sections.

Frame Assembly.
Assembly of the frame is a straightforward process once the basic steps are learned. The arches are assembled first and then they are joined together with purlins. Take care handling the arches during assembly to ensure they do not twist. Also be careful around the ridge and eave hinges—pinched hands and fingers are common if one is not paying attention. Assemble the arches as follows:

Remove an arch from one of the frame bundles and make sure the locking pins are hanging free.

Place the arch on the ground and spread out the center section so you can work at the ridge joint.

Align the holes in the arch with those in the ridge joint and insert the locking pin (figure 9).

Swing out the two legs of the arch and then obtain a header. Place the legs of the arch between the flanges on each end of the header and insert locking pins (figure 10). Slant end of header faces up.

Repeat the above procedures for the rest of the arches you will require for the size tent you are making.

Obtain purlins. They are 8-feet long with tabs on each end. Special purlins are used at entrance doors—they have a flat plate (doorsill) in the middle.

Figure 9. Ridge Joint Assembly.

Figure 10. Header Assembly.

Hold two arches upright and parallel. Insert tab of purlin into the boss of the ridge joint (figure 11).

Figure 11. Purlin-to-Arch Connection.

Rotate purlin 90 degrees so that tab locks in the boss of the ridge joint.

Take the diagonal brace attached to the purlin and rotate it toward the arch.

Insert the tab at the free end of the brace into the slot in the arch (figure 12).

Rotate tab handle on the brace 90 degrees to lock tab into the arch slot (figure 13).

Push tab handle down towards arch until it is locked in place (figure 14).

It takes five purlins to connect two arches (one at the ridge, two at the eaves, two at the bases). Continue installing purlins until all arches have been connected. Ridge purlins are installed with every other diagonal brace rotated to the left and right sides of the ridge. This provides added structural

rigidity. The braces on the eave purlins are installed pointing toward the base of the tent. When your frame is all assembled, it should resemble figure 15. Do not raise the frame structure at this time; this action will be accomplished after fabric components are attached.

Figure 12. Diagonal Brace to-Arch Connection.

Figure 13. Rotation of Tab Handle to Lock Tab Into Arch.

Figure 14. Locking of Tab Handle.

Figure 15. Assembled TEMPER Tent Frame.

Fabric Covering

This phase of TEMPER tent erection involves placing the window and door sections on the frame, attaching the end walls and installing the fly. It will take a minimum of two people to accomplish the fabric covering tasks. Make sure door sections, if used, are placed where door purlins have been installed

and that the stovepipe openings in all sections are all on the same side of the frame.

With one person on each side of a window section, locate the large grommets at the center of each side of the section.

Carry the section to the center of the frame and place the grommets over the spindles at the ridge joints (figure 16).

Repeat the previous two steps for each roof section to be installed. If you know where the environmental control unit for the tent will be located, ensure the duct ports in the tent are appropriately installed near the unit's position.

Once all the window and door sections are in place on the frame, lacing of the sections can begin. Only one side of the tent roof is laced initially; the second side is laced after the fly is partially installed. To make the lacing easier, place the large eave grommet of one of sections out of each pair being laced over its eave spindle. This tautens one side of the section pairs. Lacing is begun at the ridge joint and progresses down to the eave line.

Figure 16. Large Grommet Placed Over Ridge Joint Spindle.

Insert the first and second laces through the first and second grommets.

Run second lace up through the loop in the first lace and pull second lace tight (figure 17).

Figure 17. Typical Lacing Pattern.

Insert third lace through third grommet and through loop in second lace and pull tight.

Close the Velcro weather flap as lacing progresses (figure 18).

Continue lacing in the same manner until the reaching the next-to-last lace from the eave. Run the next-to-last lace through the loop in the last lace. Pull the next-to-last lace back toward the ridge and tie it off with a half-hitch knot.

Make sure the large eave grommet of the second section of the pair is placed over the eave spindle. Do not lace below the eave line at this time.

Continue lacing sections on the one side together until all completed.

End wall sections are installed next.

Figure 18. Closing of Velcro Weather Flap.

Find and place the large grommet of the end wall peak over the ridge spindle (figure 19) and the eave grommet of the side with laces over the eave spindle.

Lace both sides of the end wall to their adjacent respective window sections and tie off with half hitches. Install second end wall in same fashion.

Once end walls are in place, the tent fly is installed.

Place ridge extenders over all ridge spindles and insert locking pins (figure 20).

Lay out tent fly on the ground adjacent to the side of the tent and lace sections together. Start lacing at the ridge grommets and work toward the eaves (figure 21). Close weather flap as you go.

Once fly is completely laced, roll it from both sides toward the middle where the ridge grommets are located. Make sure vent stack ports in the fly are on the same side of the tent as the ports in the tent roof if you are planning to use internal tent heaters.

Figure 19. Placement of End Wall Peak Grommet.

Figure 20. Installation of Ridge Extenders.

With an individual at each center grommet, pick the rolled fly up and carry it to the ridge line of the tent. This will have to be done on the roof side of the tent that has not been laced up yet.

Figure 21. Lacing of Tent Fly.

Place the center grommets of the fly over the ridge extenders and install the hitch clip pins to secure the fly (figure 22).

Figure 22. Placement of Tent Fly Over Ridge Extenders.

Unroll the fly down the sides of the roof to the eaves. The roof side of the tent that has not yet been laced should be laced now and weather flap closed as the fly is being unrolled.

Make sure eave grommets of all window sections are over eave spindles. Install eave extenders over eave spindles (brace of eave extender points toward ridge). Insert hitch clip pins to secure eave extender to eave spindle (figure 23).

Place eave grommets of the fly over eave extender spindles and secure the fly in place with hitch pins (figure 24).

Attach guy ropes to the tent fly at each eave extender spindle location and both ridge extender spindle locations on the end walls. The guy rope is threaded through one side of a tent slip, then through the webbing loops of the fly and back through the other side of the tent slip (figure 25). Knot the end of the rope so it doesn't slide back through the tent slip.

Figure 23. Installation of Eave Extenders.

Figure 24. Placement of Tent Fly Over Eave Extenders.

Figure 25. Attachment of Guy Rope to Tent Fly.

Additional guy ropes are attached to eave and end wall ridge extenders at their bases. The guy rope is threaded through a tent slip, placed through the brace and around the pole of each extender and back through the other side of the tent slip (figure 26). Again, the rope is knotted off at the tent slip.

Figure 26. Attachment of Guy Ropes to Eave and Ridge Extenders.

Frame Erection

When the tent fly is in place, one side of the tent frame is lifted into position. Any desired internal components are then installed before raising the second side of the tent.

Roll up the unlaced sidewalls of the tent and place them between the roof and tent fly. Ensure guy ropes are also out of the way.

Ensure the locking pin at each eave joint is hanging freely and locking holes in the arches are clear of foreign materials.

With two people at each eave joint, lift the frame to shoulder height. Pull in the leg of the arch and place the weight of the tent assembly on the arch leg (figure 27). Be careful not to twist or bend frame components when lifting the tent assembly.

Align the holes of the eave joint and arch leg and insert the locking pin (figure 28).

Figure 27. Raising of Tent Frame Assembly.

Figure 28. Eave Joint Assembly.

Secure the roof fabric to the eave purlins using the Velcro connections on the purlin flap (figure 29).

Figure 29. Securing Purlin Flaps.

Install internal components as desired (selected component installation will be discussed in the next section).

Raise the second side of the tent using the same procedures as used on the first side.

Roll down the tent walls, lace up all the sides and close the weather seal flaps.

Use 12-inch metal steel pins to stake down frame footings at the base of each arch. Stake one side of the tent first, then adjust the other side to ensure it is a maximum of 20’4” at the base. If you have installed the flooring, stake the side of the tent that the flooring is tied to first.

Attach bottom purlin flaps to the base purlins.

Pull sod cloth under the base purlins and end walls (figure 30).

Install 24-inch wooden stakes 10 feet from sides and ends of tent opposite the eave extenders. Normally stakes are slanted toward the tent.

Connect guy rope from the eave extender to bottom notch of the stake; rope from tent fly goes to the top notch of the stake (figure 31).

Figure 30. Sod Cloth Placement.

Figure 31. Guy Ropes.

Component Installation

Most internal components of the TEMPER tent are partially installed while only one side of the tent frame has been erected and then completed after the second side has been raised. We will address the single ply flooring, liner, electrical system and plenums.

Clear the ground under the tent of all rocks and similar objects. Unfold the flooring sections and install one 8-foot section at a time (figure 32). The white/light gray side of the flooring faces up.

Tie the edge of each flooring section to the base purlins on the raised side of the tent frame using the tie straps attached to the flooring.

Figure 32. Flooring Section Installation.

Spread all the flooring sections out, smooth the floor as much as possible and cover all exposed ground.

Remove the electrical distribution box from the electrical component package and place it on the floor to the left of the tent entrance.

Route the power supply cables leading out of the box so that they will be between the liner and end wall. Wrap them once around the end wall arch header to relieve strain on the cables.

Route supply cables for outlets down the end wall arch and out on the eave purlins. Convenience outlet lines will be plugged into these once liner is up. Route supply cables for overhead lighting along the end wall arch header down to the header-arch connection (figure 33). Overhead lighting cables will connect to these supply lines once liner is up.

Install light support strap assemblies between arches near the arch-header connection points (figure 34). Let the white straps on the support strap assemblies hang freely.

Bring a tent liner section inside the tent and unfold it.

Figure 33. Electrical Cable Routing.

Figure 34. Light Support Strap Assemblies.

Locate the three support straps on the liner, push one end of each strap around the ridge purlin and connect it to its respective other end (figure 35).

Figure 35. Overhead Liner Connections.

Tie center tie tapes to headers, side tie tapes to adjacent frame members. Use bow knots.

Install the remaining liner sections to include end walls. Fasten liners together using the Velcro strips along their edges.

Obtain end wall or sidewall plenum as appropriate. Attach intake end of plenum to ventilation sleeve in the tent wall (figure 36). Attach the plenum duct to arch headers using the ties along the sides of the plenum.

Attach plenums together using the Velcro fasteners and connect them to tent frame headers until required length is reached. Install plenum cap on last section.

Raise the second side of the tent frame using the same procedures as described earlier.

Lace the remaining end and sidewall sections and close weather flaps.

Figure 36. Plenum Connection to Ventilation Sleeve.

Attach tent fabric purlin flaps to base purlins and pull sod cloth under the base.

Spread out floor sections, connect them together using the Velcro fasteners and tie them to the base purlins.

Place electrical distribution box stand between the liner and end wall tent fabric adjacent to where the electrical box was initially placed.

Extend the stand until its upper flange meets the header, then insert the hitch pin near the base of the stand to lock the stand in place (figure 37). Ensure the stand is solid.

Hang the distribution box on the distribution box stand plate by inserting the bolts on the box into the keyhole slots on the plate.

Figure 37. Electrical Distribution Box Stand.

Obtain light fixture and wrap light hanger straps around it at each end inside of the rubber end caps (figure 38). Secure straps using their Velcro fasteners. Ensure male plug end of fixture is facing the electrical distribution box.

Install all remaining light fixtures on both sides of the tent and plug them together. Plug fixture strings into supply lines from the distribution box. Also attach convenience outlet strings to their supply lines. Route cables as necessary through the liner.

Figure 38. Installation of Light Fixtures.

The lighting system described in the preceding paragraphs is more commonly used in specialized Harvest Falcon facilities such as the air transportable hospital. Most other TEMPER tents used by Air Force personnel will have an incandescent lighting system. This system consists of a junction streamer, two light streamers (3 lights each), and two outlet streamers. The junction streamer is plugged into the power distribution panel (part of the Harvest Falcon electrical system) located outside of the tent and run under the outside fabric into the tent (a qualified electrician should make the connection). The outlet and light streamers are plugged into a receptacle box at the end of the junction streamer. The lights have hooks attached to them enabling them to be hung from the tent frame structure and slipped through the tent liner at the velcro seams. The light strings also have receptacles and plugs at their ends allowing them to be connected together. Normally one light streamer is

installed on each side of the tent air plenum. All cabling is installed between the tent and its liner as much as possible.

Vestibule Assembly

The vestibule assembly is used either as an entranceway to a TEMPER tent or as a connecting passage between two tents. While a vestibule is useful in helping maintain cleanliness of the tent and providing a weather barrier at an entrance, a TEMPER tent does not need one to function properly. A vestibule can be connected to both an end wall or side wall door opening. It is installed as follows:

Unroll the vestibule adapter around the door opening and unfold and spread out the vestibule fabric itself.

Find and align the center grommets in the adapter and the vestibule fabric. Lace the vestibule to the adapter starting at the ridge and working down to eaves. Tie off at the eave using a half hitch.

Assemble the three vestibule frames by inserting the frame legs into the vestibule frame headers (figure 39). Insert locking pins to secure the legs.

Take one frame, place it under the adapter/vestibule connection and insert the spindles on the frame through the three grommets (ridge and two eave).

Insert hitch pins in spindle and close weather flap.

Insert second frame at midpoint of vestibule fabric; place spindles through grommet and insert hitch pins (figure 40).

Lean total assembly back against the tent side and install third frame in vestibule fabric.

Figure 39. Vestibule Frame Assembly.

Figure 40. Vestibule Frame Installation.

Extend vestibule out completely and attach guy ropes to the spindles at the eaves of the third frame section and stake them to the ground (figure 41).

Fasten the tie tapes inside the vestibule around the frames and finish lacing the vestibule to the adapter and closing the weather seals.

Install 12-inch metal pins in base plates of all vestibule frames to anchor frames in place.

Figure 41. Vestibule Final Assembly.

Striking Procedures

Care must be taken in disassembling the tent so as not to damage it in any way or otherwise make it unserviceable for future deployments. As items are removed during tear down, clean them as thoroughly as possible. Do not pack any components wet. Before starting disassembly, have the electrical service to the tent disconnected from the local power source and gather all packing boxes. Procedures for striking the tent are as follows:

Close all windows and doors and release tension on guy ropes.

Untie vestibule tie tapes and pull steel pins from vestibule frame base plates.

Collapse vestibule against the tent and remove hitch pins from vestibule frame spindles.

Remove the three frames from vestibule fabric and disassemble them.

Unlace vestibule from adapter, fold and pack vestibule fabric.

Remove guy ropes from stakes and pull all stakes and metal tent pins.

Remove and pack lighting fixtures.

Untie floor and liner tie tapes from base purlins and disconnect all base purlin flaps.

Take electrical distribution box down and remove the distribution box stand.

Unhook all outside fabric laces up to the eave level and untie liner from sides of the frame.

Fold up fabric sections from the sides of the tent and placed them under the tent fly.

Take away electrical outlets.

With personnel at each arch, pull the locking pins at the eave connections and lower tent to the ground.

Unhook and remove plenums and liners.

Remove electrical distribution box and light support strap assemblies.

Unfasten, fold and remove all floors.

Disconnect eave purlin flaps.

Remove hitch clip pins and fly from eave extenders.

Remove eave extenders and unlace all roof sections.

Remove hitch clip pin from ridge extender, remove and fold fly and disconnect ridge extenders from frame.

Remove end walls and all roof (sidewall) sections.

Disconnect all diagonal frame braces and fold them up.

Rotate and remove purlins.

Lay frames on their sides and remove locking pins in header flanges.

Remove ridge locking pins.

Fold up arch frame sections and strap together.

EXPANDABLE SHELTER CONTAINER (ESC)

Characteristics

The expandable shelter container (figure 42) is a hard-walled building used to support functions that require a more substantial, weather-tight facility such as aircraft maintenance shops, command posts and laboratories. The ESC unfolds from a packaged shipping container (center section) to an expanded shelter mode. The foldout roof panels are hinged to the center section roof; the folded floors are hinged to the center structure floor. End walls are hinged to the foldout floors, and swing-out walls for the sides are hinged to the center structure sidewalls. The structure is leveled and supported by eight jacks. Double doors are installed in one end wall of the center section and a personnel door is in the other end. When folded, the ESC dimensions are approximately 13 feet long, 8 feet wide and 8 feet high. When expanded, its size is approximately 13 feet long, 21.5 feet wide and 8 feet high. You will need a forklift to move the facility to its site; it weighs a little over 2 tons. The ESC is heated and cooled using a bare base environmental control unit (ECU) or the new field deployable environmental control unit (FDECU).

Site Preparation

Site preparation for the ESC is relatively minimal. The location must have good drainage and enough maneuvering room for easy forklift movement. Slope of the area should be such that not more than an 18-inch change in elevation over the footprint area of the facility is encountered. Clear loose materials and undergrowth from the area that will be under the building once it is expanded. Most ESCs will have to have immediate vehicle access since they are shops. Keep this requirement in mind and don’t forget to allow space for the external ECU. Look for firm ground conditions since the entire weight of the building rests on the eight support jacks; soft ground could lead to uneven settlement and eventual facility damage. An option for the soft ground situation is to place plywood or lumber under the jacks for stabilization.

Figure 42. Expandable Shelter Container.

Expanding The Shelter

Expanding the shelter entails unfolding and connecting the roof, floor and walls of each side of the shelter and installing the eight leveling jacks. Several people are required to erect this facility (minimum of 6) since some of the pieces that will be moved weigh approximately 250 pounds. Shelter erection activity begins with the center section of the ESC.

Remove jacks from their storage location inside the ESC and install one jack at each corner of the center section (figure 43)

Raise shelter enough so that all parts of the base are 3-6 inches off the ground. To avoid overloading the jacks or twisting the structure, rotate both jacks on one side simultaneously.

Place level on floor of center section parallel to the 13' dimension. Raise and level the low end of the center section first using both jacks on the same side simultaneously.

Place level on the rim of the center section parallel to the 8' dimension. Raise and level the low end using both jacks on the same side simultaneously (figure 44).

Figure 43. Installation of Corner Jacks.

Figure 44. Leveling Center Section.

Check for final level in all directions. Repeat the previous two steps again as necessary.

Unlatch the roof from the center section of the structure. Unpin the adjustable roof support struts and extend the inner tube to the point that three holes are visible below the outer tabs and pin in place. Raise the roof, being careful not to bind the support strut swivel (figure 45). If a strut is not making firm contact with the ground due to surface unevenness, simply extend the pole by one or more holes.

Rotate locking plate 180 degrees, and attach safety cable to floor section. Lower floor section to horizontal position (figure 46). If floor does not lower properly, it may be necessary to extend the roof support struts by one or more holes.

Raise end wall to vertical position (figure 47), then hold it in place and swing sidewalls out (figure 48).

Figure 45. Raising of Roof Panel.

Figure 46. Safety Cable Attachment.

Figure 47. Raising of End Wall.

Figure 48. Positioning of Swing-out SideWalls.

Latch floor to sidewalls, then latch end wall to sidewalls.

Install jacks at each corner of the expanded section.

Lower roof onto end wall and sidewalls with support struts and latch roof to walls. Place support struts back into stowed position (figure 49).

Figure 49. Final Positioning of Expanded Section.

Remove safety cables from floor and stow them back in the center section.

Repeat the above steps for the other side of the shelter.

Anchoring

To provide additional stability to the shelter and reduce the effects of wind loading, the ESC is anchored to the ground in several places. The anchors, driving rod and driving head are included with the ESC, but you will have to obtain a sledgehammer, crescent wrench and jack (such as an automobile jack) to perform the anchoring task. The anchors with cables attached are driven approximately three feet into the ground, then set using the jack.

The center section requires eight anchors, two near each corner. One of the corner anchors is placed so that the anchor cable goes straight out from the tie-down ring on the center section pallet and heads down at a 30-degree angle. The second anchor is placed so that the anchor cable will be 30 degrees out from the wall and heading down at a 45-degree angle (figure 50). The cable from this second anchor connects through a hole in the center section underframe.

Anchors are also installed for the expanded sections of the ESC; two anchors per section, one at each corner (figure 50). These anchors are installed such that the cables from the building to the anchor will be 30 degrees out from the shelter end wall and heading down at a 45-degree angle. The cables are attached to tie down rings, which are screwed into the bottom of the end wall section floor.

Cables are connected to the ESC using cable clamps once the facility is leveled and expanded.

Figure 50. Anchor Cable Layout.

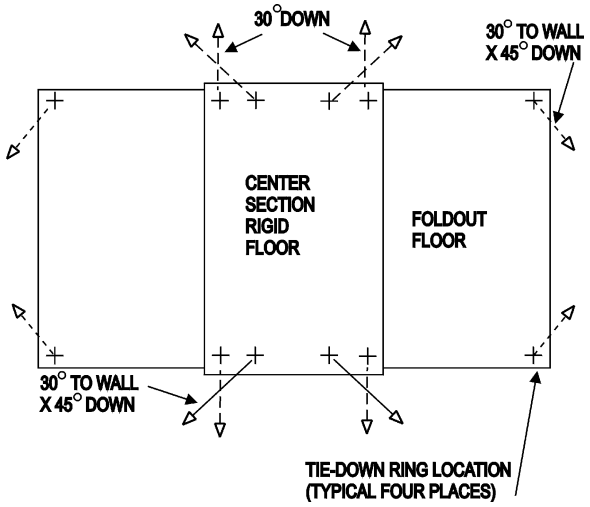

Electrical/Mechanical Connections

The ESC is prewired and requires little effort to connect to supporting utilities. For electrical connections:

Turn off all circuit breakers.

Remove overhead light fixtures from their stowed position in the center section and install two on the ceiling of each of the expanded sections.

Assemble exterior light fixture and mount adjacent to personnel door.

Plug exterior light cable into the J3 receptacle on the exterior power panel.

Remove outlets from their stowed position and mount them on the walls of the expanded sections.

For ECU installation (figure 51):

Remove solid panels from air inlet and outlet openings.

Install louvered air inlet panel in the top opening.

Figure 51. Environmental Control Unit Installation.

Install unlouvered air outlet panel in the bottom opening.

Connect flexible ducts from the ECU to the appropriate openings. If desired, the ventilation fans may be removed and replaced with the solid panels from the air inlet and outlet openings.
Connect power cable from the ECU to receptacle J2 on the exterior power panel.

Connect power-input cable from the electrical distribution system to receptacle J1 on the exterior power panel. A qualified electrician should complete this connection.

Striking Procedures

Striking procedures for the ESC are meant to disassemble the facility and place it back into shipping configuration. Throughout the disassembly and packing process, remember to thoroughly clean the various components so that damage is not caused to the building and problems are not encountered with customs officials at the ports.

Turn all circuit breakers off.

Disconnect all cabling at the external power panel.

Remove and stow the external lighting fixture.

If ventilation fans were removed during assembly, replace them at this time. Disconnect the ECU flexible ducting and replace air inlet and outlet panels with solid panels.

Relocate internal overhead lighting and utility outlet fixtures to stowed positions. To prevent damage to the structure when stowing the outlet fixtures, ensure the flush side of the fixtures is turned toward the hinged side of the wall.

Disconnect all tie-downs, remove tie-down rings and pull anchors.

Unpin roof support struts from stowed position on one of the expanded sections and place them in position to support the roof panel.

Unwrap the safety cables and attach between upper center structure and the floor.

Remove the jacks from the corners of the section being folded and stow the jacks in the center section.

Disconnect side walls and end wall from roof section and raise roof using the roof support struts sufficiently to allow clearance for folding up walls.

Disconnect end wall and floor from sidewalls and rest end wall against the support struts.

Rotate right sidewall, then left side walls into stowed position.

Fold end wall down to the floor and then raise floor to folded position. Use the safety cable to help support the floor in increments as it is raised.

Detach safety cable from floor and place in stowed position.

Partially lower the roof section and pin support struts in stowed position.

Completely lower roof section and latch it into place on the center section.

Repeat the appropriate steps above to close the other expanded section of the ESC.

Remove the four jacks supporting the center section and stow them inside the center section.

GENERAL PURPOSE SHELTER

Characteristics

The General Purpose (GP) Shelter (figure 52) is an air transportable, hard-walled facility used primarily for equipment and aircraft maintenance shops. The entire facility is shipped inside a single container (figure 53). This container when filled weighs approximately 11,000 pounds; therefore, you will obviously need a forklift to transport the GP shelter to its erection site. The building occupies a 31-foot by 48-foot area and provides about 1400 square feet of unobstructed floor space once erected. It will take approximately 90-120 man-hours to assemble. Crew size is normally about eight people. The basic shelter consists of five arches, two end walls and an electrical system. Provisions are also made for connection of two environmental control units. Each of the arches consists of six beam panels. Each beam panel consists of two arch beams and

Figure 52. General Purpose Shelter.

Figure 53. General Purpose Shelter Shipping Container.

one panel. The arches are self-supporting and are secured to basepads, which are anchored to the ground. The end walls consist of column-supported panels and truck doors. The electrical system includes interior lighting, exterior lighting and outlets. Several types of fabric flashing for the various joints in the facility are provided to preclude weather problems.

Major Components

Types A, B, and C Basepads (figure 54). Three types of aluminum basepads are used to anchor the shelter to the ground. Type C basepads secure the end wall columns to the ground. Type B basepads are used at the corners of the shelter to secure the corner arch beams. Type A basepads are used along the sides of the building to hold the arches in place.

Types A, B, C, D and E Arch Beams (figure 54). Five types of aluminum arch beams are used to provide the structural rigidity for the GP shelter. Types B and C arch beams attach to the basepads while types A, D and E form the overhead arch members.

Panels (figure 54). There are 38 panels required for typical GP shelter erection; 30 solid, 4 breached (ECU connection panels) and 4 specialty (end wall upper panels).

End Walls (figure 55). In addition to the solid and specialty panels mentioned above, the end walls require truck door entrances, support columns and headers. R1 and L1 columns support the ends of the end wall and R2/RU2 and L2/LU2 columns support the truck doors. The aluminum header spans the truck door columns and is also attached to the overhead end arch beams.

Figure 54. Basepads, Beams and Panels.

Figure 55. End Wall Components.

Shelter Flashing. Shelter joints are sealed against the weather by ridge flashing, arch counterflashing, ground skirt flashing, end wall flashing, jamb flashing, panel-to-panel flashing and panel-to-beam flashing. The ridge flashing is installed along the ridge of the shelter, one section for each arch. The arch counterflashing covers the arch-to-arch joints. Ground skirt flashing seals the base of the facility. End wall flashing protects the joint between the top of the end wall and the end arch of the shelter. Jamb flashing is used to seal the connection of the door assemblies to the end wall panels. Panel-to-panel and panel-to-beam flashing seal the joints between the panel and beam structural members.

Electrical System. The electrical system includes a distribution panel, eight junction boxes, eight interior fixtures, two exterior light assemblies and two extension cables.

Two standard sized GP shelters can be erected end to end, with no end walls in the middle section, to form one larger facility.

Site Preparation

You should strive to site the GP shelter in an area that has good accessibility, drainage, and vehicle maneuvering space. Figure 56 illustrates a typical layout. Grade the site as necessary to provide a relatively level surface. Choose a site that is firm enough to support fork lift traffic initially and constant cargo vehicle traffic once the facility is erected. Check figure 56 for location of the shipping container—you don't want to have it in the way when you start to construct the building nor do you want it too far away so you have to carry building components a great distance.

Component Layout

Your first step is to unpack the shipping container and place the shelter components around the outside of the shelter area near where they will be used during the erection of the shelter. You should totally remove the doors of the container, loosen retaining straps as needed and place the cargo netting back over the top of the container to keep it out of the way. Remove the building components and place them around the shelter area—use the diagram in figure 57 as a location guide. Make sure you have enough personnel available to safely move the heavier items, some weigh almost 300 pounds. Once the shipping box is emptied of building components put the straps, netting and dunnage back into the container. Additionally, after the building is set up place any empty packing boxes back into the container. You will need all these items when you take down and repack the facility in the future.

Basepad Layout And Anchoring

Laying out the basepads for the GP shelter is a critical first step in shelter erection. These plates must be accurately arranged or the shelter cannot be erected properly. The steps involve aligning the A, B and C basepads, staking the basepads in place, and tying them down with ground anchors. The general procedures for these tasks are as follows:

Obtain basepad layout tool (two special cables used to form a right triangle) and attach type B basepads to each of the three posts on the

tool. Be sure the arrows on the basepads face toward the outside of the shelter.

Figure 56. Layout Plan for GP Shelter.

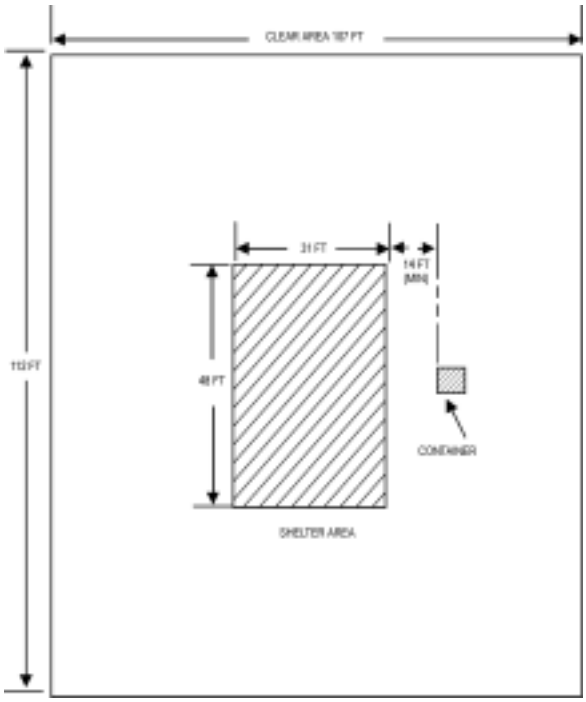

Figure 57. Component Layout Diagram.

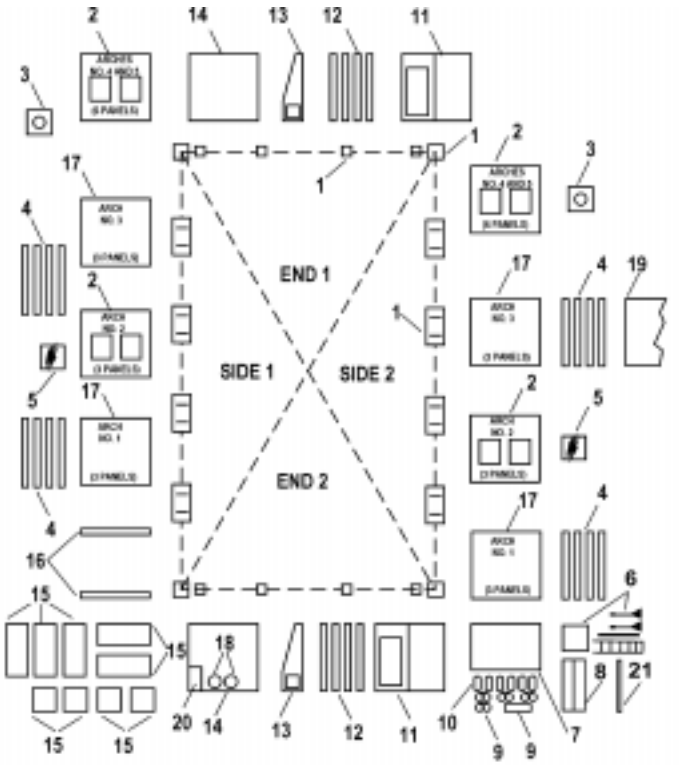

1. BASEPADS
2. BREACHED AND SOLID PANELS
3. HEATER INLET AND VENTILATION PANELS
4. ARCH BEAMS
5. WINDOW PANELS
6. ERECTION KIT (LOOSE TOOLS AND TOOL STORAGE BOX)
7. MEMBRANE FLOOR
8. ENDWALL AND GROUND SKIRT FLASHING
9. ARCH COUNTERFLASHING AND RIDGE FLASHING
10. FLASHING RETAINERS
11. TRUCK DOOR ASSEMBLIES
12. ENDWALL COLUMNS AND HEADERS
13. UPPER ENDWALL PANELS
14. LOWER ENDWALL PANELS
15. PACKING BOXES
16. ERECTION TRACK ASSEMBLY
17. SOLID PANELS
18. DOME REFLECTORS AND WIRE GUARDS
19. SHIPPING CONTAINER
20. POWER DISTRIBUTION PANEL
21. EXTERIOR LIGHT ASSEMBLIES

Extend the type B basepads to the three corner locations, ensuring layout tool cables are correctly seated in the slots on top of the posts (figure 58). If you want to have the shelter oriented in a specific direction, now is the time to do it by adjusting the orientation of the legs of the cable triangle, e.g., paralleling one of the legs with an adjacent road surface. Keep the cables taut.

Stake the corner basepad (the one at the right angle of the triangle) down with four shear stakes. Drive the stakes only halfway.

Pull the layout tool cables tight to final locate the remaining two basepads and stake each of these with four shear stakes driven only halfway.

Recheck the position of the basepads to ensure they are in the location you desire. If so, drive all the shear stakes in completely.

Locate four type A basepads under the side cable (the 48' leg). Align the basepad lugs with the sleeves of the side cable (figure 58). Ensure arrows on the basepads point outward.

Place two type C basepads under the end cable (the 31' leg). Align the basepad lugs with the sleeves of the end cable. Two additional type C basepads will be installed later during end wall erection for a total of four type Cs on each end of the shelter.

Using shear stakes, completely stake down the A basepads (6 stakes) and C basepads (3 stakes).

Reposition the basepad layout tool to allow layout of basepads on other two sides of the shelter. Leave the 57' cable in place (the diagonal cable) move the other layout cable.

Attach a type B basepad to the single available post, stretch the cables taut and position the basepad. Stake it in place with four shear stakes.

Figure 58. Basepad Layout.

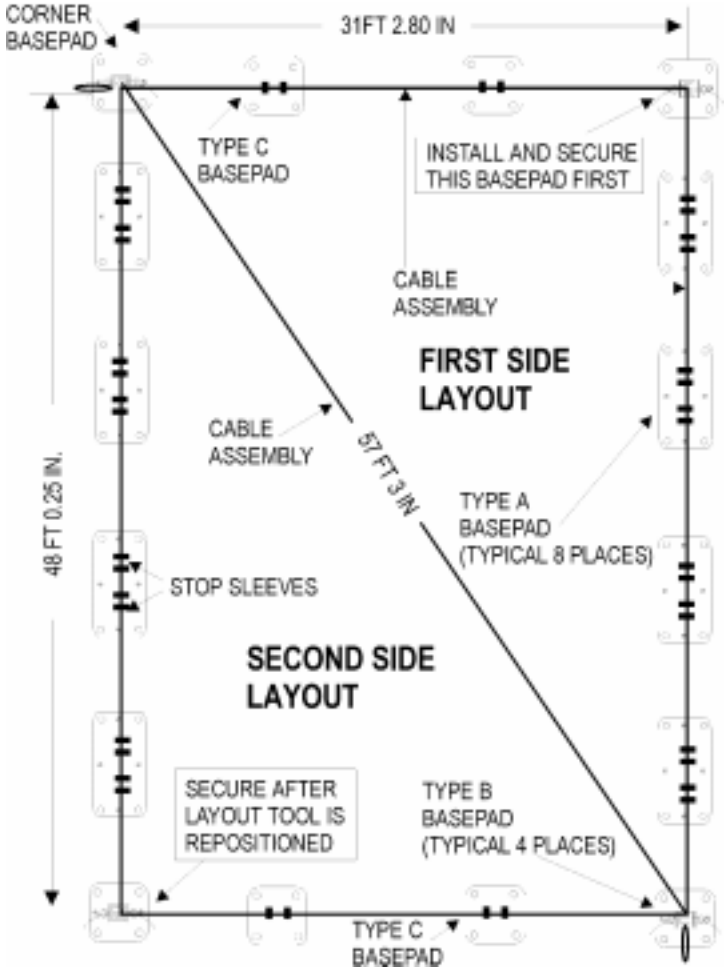

Position the remaining four type A and two type C basepads and stake in place. Remove layout tool and place it back in its storage container.

Place four anchors at each type A and B basepad. Drive anchors at each corner of each basepad at a 30-degree angle (figure 59). Anchors should be driven to depth of about 5 feet.

Set anchors using the 5' drive rod, cable puller, and fulcrum bar (figure 59). The cable puller is attached to the anchor cable and then attached to the drive rod. Set one end of the drive rod in the fulcrum bar and pull up so that the anchor sets. The anchor cable will have to be pulled about 6" for the anchor to set.

Figure 59. Basepad Anchoring.

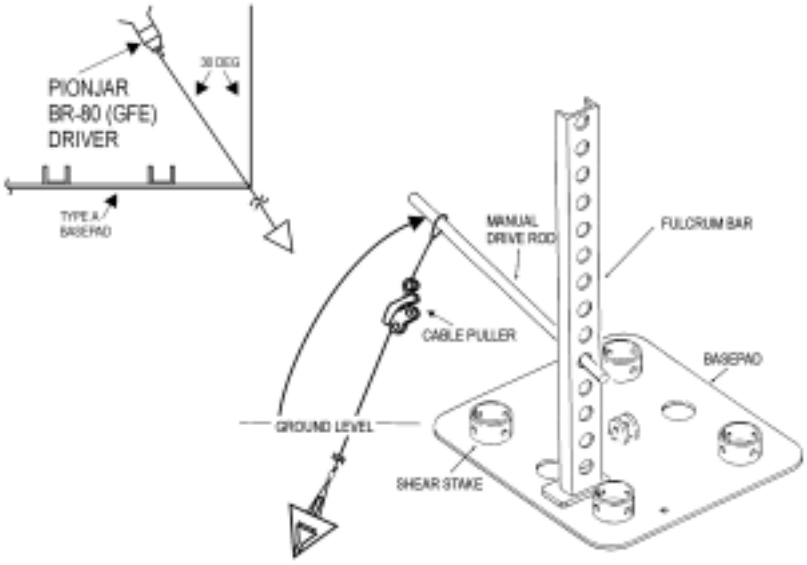

Thread anchor cables through the most direct holes in the heads of the shear stakes of the basepads directly opposite each other on both sides of the shelter (figure 60).

Loop anchor cables near shear stakes and attach wire rope clamps but tighten only the wire rope clamps on the outside loops (figure 60). Note that the two cables on each basepad are interconnected--the inside cable is run through the outside cable loop.

Form a second loop in the end of one of the inside anchor cables and attach the clevis of the erection harness to it.

Attach the cable puller to the inside cable at the opposite basepad. Install winch hoist between erection harness and cable puller (figure 60).

Use the winch hoist to tighten the anchor cables and secure inside cable wire rope clamps.

Repeat the above cable tightening steps for the remaining sets of cable pairs on all basepads.

Arch Assembly and Erection

Arches are erected individually beginning at either end of the shelter. Each arch is comprised of six beam panels connected together by pins and hinges. The arches are raised using a winch and track assembly and pinned at the "keystone area" and basepads. Erection of the shelter arches is begun at the right hand corner as you face the end wall.

Place a type B arch beam mounting end near the type B basepad with spacer bars facing out and flashing fastener strips facing up. Place a type C arch beam mounting end near the type A basepad with spacer bars facing out and flashing fastener strips facing up.

Figure 60. Anchor Cable Tensioning.

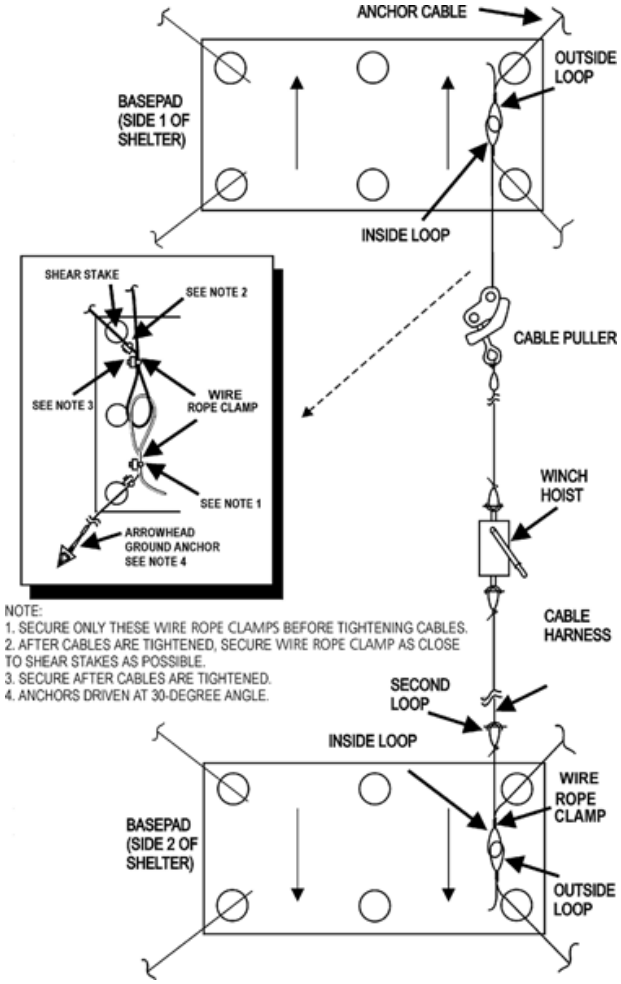

Place a solid panel between the two arch beams on the arch beam support lips (figure 61). Side with exterior flashing attached faces up; the white side of the panel faces down. The panel edge with the flashing retainer strip is placed such that the flashing from the next arch panel up can be attached.

Secure the panel to the arch beams by rotating and engaging the latch assemblies. Listen for an audible click to indicate the latch is fully engaged.

Attach the panel-to-beam flashing to the flashing fastener strips on both beams.

Assemble panel #2 in the same fashion as panel #1 using one type E arch beam, one type D arch beam and a solid panel section.
Pin the top hinge of the type D arch beam of panel #2 to the type C arch beam of panel #1 (figure 62).

Figure 61. Panel-to-Arch Beam Connection.

Figure 62. Beam-to-Beam Pin Connection.

Pin the top hinge of the type E arch beam of panel #2 to the type B arch beam of panel #1.

Lift the panel assemblies to an inverted "V" position and pin the lower hinges of the types D and E arch beams to the links in the types C and B arch beams.

Position the basepad mounting ends of the type B and C arch beams on the first panel assembled on the type A and B basepads and pin into place (figure 63).

Fasten panel-to-panel flashing between the second panel assembled and the first panel.

Assemble a third panel section using two type A arch beams and one solid panel.

Figure 63. Pinning of Panel to Basepads.

Pin the third panel assembly to the second at both the upper and lower hinges of the arch beams.

Fasten the panel-to-beam flashing of the third panel and the panel-to-panel flashing between the third and second panels.

Assemble a fourth panel section using a type B arch beam, a type C arch beam and a solid panel.

Assemble a fifth panel section using a type D arch beam, a type E arch beam and a solid panel.

Pin the fourth panel assembly to the fifth at both the upper and lower hinges of the arch beams.

Fasten the panel-to-beam flashing of both panels and the panel-to-panel flashing between the fourth and fifth panels.

Assemble a sixth panel section using two type A arch beams and a solid panel.

Lift one end of panel section six and the free end of panel section three and pin the top hinges of panel section six to the top hinges of panel section three. Allow the free end of panel six to remain on the ground.

Place panel sections 4 and 5 adjacent to panel section six so that the top hinges of sections 5 and 6 can be pinned.

Install erection tracks on basepads A and B on the left-hand side as you face the end wall. Panel section 4 will eventually connect to these basepads. The tracks are pinned in place and positioned such that they extend outward from the basepads (figure 64).

Figure 64. Erection Track Placement.

Lift the arch assembly sufficiently high enough so that the lower hinges of panel sections 5 and 6 can be pinned. As the panels are lifted for pinning, guide the arch beam ends of panel four into the erection tracks (figure 65).

Figure 65. Placement of Panel Sections Prior to Erection.

Assemble erection harness to winch hoist and secure harness to arch beams (figure 66).

For protection against cable breakage, place an end wall solid section resting on two end wall columns over the winch hoist cable (figure 66).

Operate the winch hoist; the unpinned end of the arch will be drawn inward. After the unpinned end has been drawn in about a foot, lift the center point of the arch until the arch is about 5 feet off the ground.

Continue operating the winch hoist until the ends of the arch beams of panel section 4 slide into the basepads.

Unpin the erection tracks and slide them out of the way. Use the anchor driving rod as a lever to raise the panel 4 arch beams sufficiently to align the beam mounting holes with the basepad lugs. Once the basepad lugs and beam mounting holes are aligned, pin the arch beams to the basepads. To prevent damage to the panels, lift only on the aluminum beams.

Figure 66. Winch Hoist and Harness Assembly.

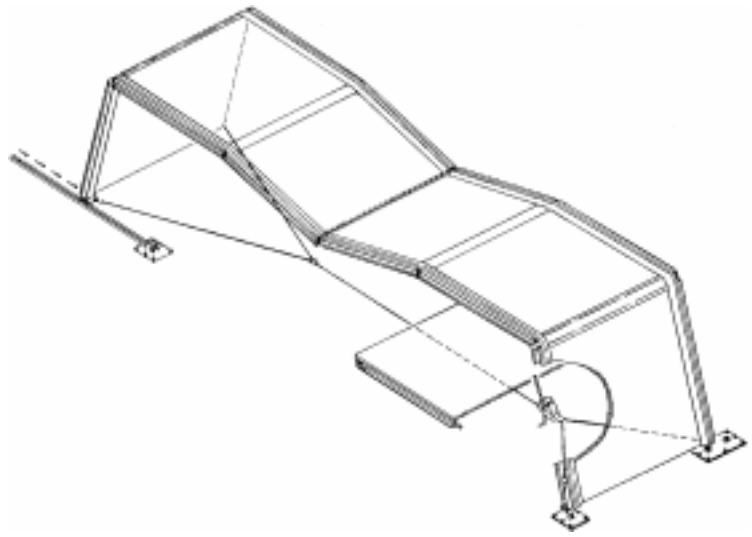

Pin the lower hinges of panel sections 3 and 6 together and remove erection tracks and winch hoist assembly.

The remaining arches of the GP shelter are erected similarly to the first one. These adjacent arches share type A basepads. Arches 2 and 4 differ slightly in that they have breached panels installed as panel sections 1 and 4. These breached panels (figure 67) have openings for windows and mechanical system connections. Both the windows (figure 68) and mechanical connection panels (figure 69) insert into the side wall panel openings and are secured in place using latches tightened by thumbscrews. Figure 70 illustrates the typical connection of the bare base ECU to the shelter walls.

Figure 67. Breached Panel Section.

Figure 68. GP Shelter Windows.

Figure 69. GP Shelter Mechanical Connection Panel.

Figure 70. Bare Base Environmental Control Unit Attached to GP Shelter.

As adjacent arches are erected, they are joined together with spacer bars to provide structural rigidity. Two spacer bars are built into each type A, B and C arch beam. Their installation is straightforward.

Starting at the bottom arch beam (work from outside of the shelter), unpin and swing the lowest spacer away from its attached arch beam and loosen the hand knob on the spacer.

Extend the spacer bar until it meets with the angle bracket on the adjacent arch beam, align the holes and pin it in place (figure 71). Hand tighten the hand knob.

Use installed spacer bars as a ladder to reach higher spacer bars. As spacer bars are installed, check panel-to-panel and panel-to-beam flashings for correct attachment.

Figure 71. Spacer Bar Attachment.

Interior Electrical System Installation

The interior electrical system for the GP shelter consists of a power distribution panel, several junction boxes, overhead lighting fixtures and

associated cabling. The types of lighting fixture may vary depending on the model of the shelter but both are incandescent therefore the installation principles are similar. Basic installation is as follows:

Find the boxes containing the electrical components and unpack them. Place the electrical components adjacent to their installation locations (figure 72). Note that there are several types of junction boxes. In some cases you may have to assemble the lighting fixtures.

Run the light hanger wire rope up and over the first spacer bar of panel section 3 and connect the loop end of the wire rope to the hook on the top of the lighting fixture.

Run the cable from the light fixture up and over all the spacer bars in panel section 2 (figure 73).

Install the remaining lights in the same manner at their respective locations.

Attach the power distribution panel to the adjacent arch beams on the panel 1 sections of the first and second arches erected—see figure 72.

Attach junction box A1 to the fourth spacer bar from the ground between the panel 1 sections of the first and second arches erected.

Install the seven remaining junction boxes making sure the junction box locations shown in figure 72 are followed (see figure 74 for electrical schematic).

Connect the electrical cables between the lights, junction boxes and power distribution panel. Connect the extension cables for the outside lights to the J3 connector of junction boxes A1 and A5 but leave them coiled on the ground for now.

Figure 72. Interior Electrical System Component Positioning.

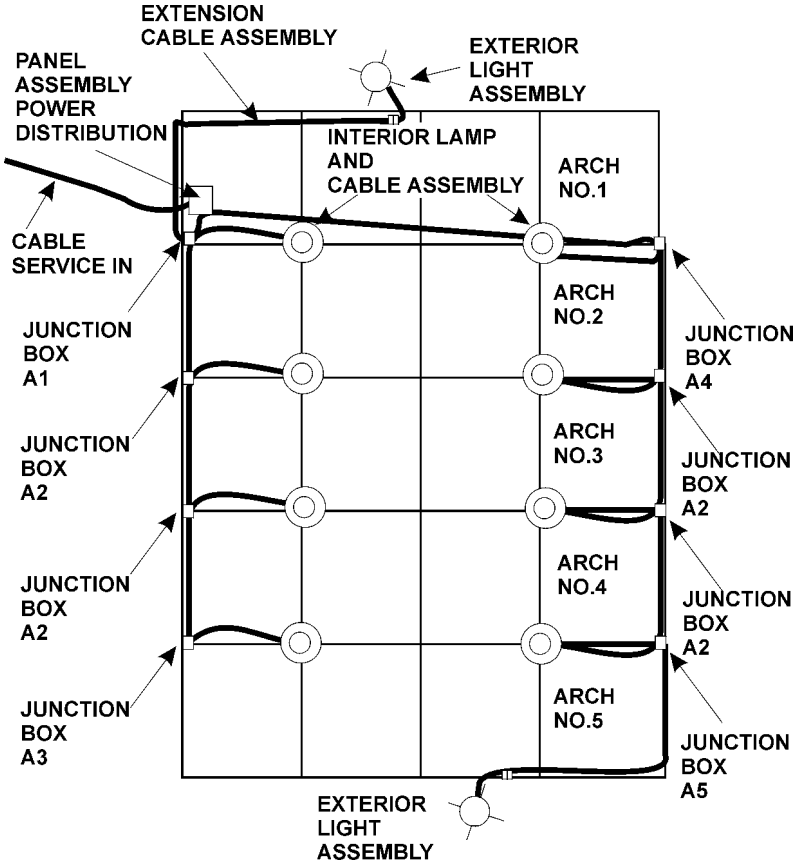

Figure 73. Lighting Fixture Cable Run.

Ridge Flashing Installation

Once the spacer bars are positioned and interior electrical work is completed, ridge flashing is installed. Five flashing strips are used; one at each of the joints of panel sections 3 and 6 at the ridge of the shelter. The strips are unrolled over the joints and the rubber seals on the flashing are inserted into the retainers on the panels (figure 75).

End Wall Erection

Erection of the end walls consists of column erection, panel installation, door installation and flashing installation. Both end walls are erected in an identical manner. Installation of the RU-2 and LU-2 columns and placement of the type B clamps can also be done prior to raising the end arches if desired. This option makes the end wall erection a little easier since the arch beams are easily accessible and stepladders won't be needed.

Figure 74. Interior Electrical System Schematic Diagram.

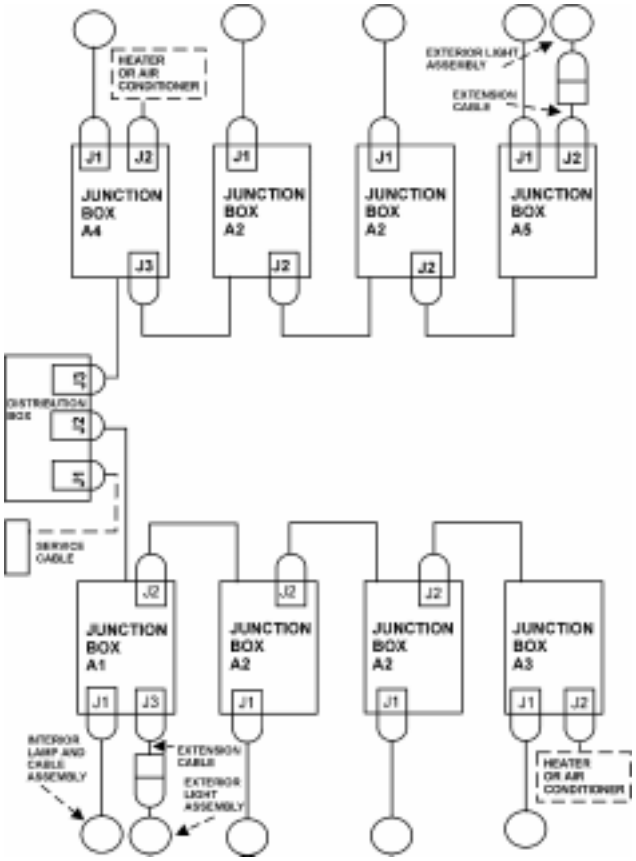

Figure 75. Ridge Flashing Installation.

Column Erection

Obtain the end wall column locator bar and columns RU-2 and LU-2.

Lay the column locator bar on the lower flange of the arch beam of panel section 3 butted up against end of the hinge.

Attach column RU-2 to the arch beam (figure 76). Snug the clamp on the end of the column up to the end of the locator bar and tighten clamp hand knob. Knob should be facing in toward the inside of the shelter.

Attach column LU-2 to lower flange of panel section 6 in a manner similar to installation of column RU-2.

Join the two halves of the header together with the “T” pin and pin the header unit between columns RU-2 and LU-2 (figure 77).

Secure the header to panel section 6 arch beam using the header support clamp (figure 77).

Figure 76. Column Attachment to Arch Beam.

Figure 77. Installation of Header.

Panel Installation

Place end wall columns L1 and L2 on the ground about 7 feet apart with latches facing in and flashing fastener strips up.

Place a panel section between the columns and fasten latches with latch wrench.

Attach panel flashing to columns.

Build second end wall panel section using columns R1 and R2.

Lift the L1/L2 panel section into place, pinning column L2 to column LU-2 (figure 78).

Figure 78. L2/LU-2 Column Connection.

Attach column L1 to panel section 5 arch beam using the column clamp assembly.

After placing a type C basepad under column L1, remove the outside pin of the L2/LU-2 column connection and swing panel section inward away from the basepad.

Stake basepad in place.

Swing panel back to vertical position, pin locking bars of L1 and L2 columns to basepads and replace pin in L2/LU-2 connection.

Install the R1/R2 panel section in the right side of the end wall.

Mount two type B clamp assemblies on the lower flange of both panel section 2 and 5 arch beams.

Position the upper left side panel in place (flashing on outside) and latch to column LU-2. Position and tighten the two type B clamp assemblies (figure 79).

Figure 79. Upper Panel Section Placement.

Secure panel-to-panel and panel-to-column flashing.

Install upper right side panel in same manner as left side.

Door Installation

Assemble left door by inserting splice bars and mounting bracket of upper door panel into the channel and mounting bracket of lower door panel (figure 80). Put right door together in a similar manner.

Obtain door positioning tool and install it on lower end of column R2.

Place hinged side of right door on positioning tool and turn adjusting knob until hinge mounting bolts are lined up with column R2 mounting inserts (figure 81).

Figure 80. Door Assembly.

Figure 81. Door Hinge Mounting Bolts and Column Mounting Inserts.

Screw mounting bolts into column inserts. Remove positioning tool.

Place positioning tool on column L2 and install left door.

Adjust door hinge mounting bolts such that the lock assembly works properly and the spring bolt engages the header correctly. Tighten nuts on mounting bolts after doors are adjusted.

Using retainer clips secure door flashing over panel flashing along the end wall column flanges (figure 82).

End Wall Flashing Installation

Find midpoint of end wall flashing and roll both ends of flashing toward the center.

Place midpoint of flashing at ridge of the end wall and unroll both sides down the arch. Half of the flashing should remain on the roof of the shelter; the other half should hang over the edge of the end wall.

Figure 82. Door Flashing Attachment.

Starting at the ridge, work down both sides of the shelter pressing the rubber edge of the flashing into the end wall flashing channel (figure 83).

Figure 83. Attaching End Wall Flashing to End Wall Panels.

Once columns R1 and L1 are reached attach flashing to inner flange of these columns using retainer clips. Leave bottom two feet of flashing loose at this time.

When the securing of the end wall edge of the flashing is complete, start back at the ridge to secure the other side of the flashing strip. Attach the flashing to the upper flange of the arch beams from the ridge down the arch to ground level. Leave the bottom two feet of flashing loose at this time.

Exterior Electrical System Installation

The exterior electrical system simply consists of exterior lighting at both ends of the shelter. The light assembly cable is plugged into junction box A1 (or A5 depending on which end you're working on) and run up the end wall flashing to the ridge of the shelter. The light fixture is attached to the shelter at the ridge of the end wall using a clamp assembly.

Arch Counterflashing Installation

Arch counterflashing is one continuous strip for each arch joint. This flashing is installed over each arch joint after all interior and exterior electrical work has been completed and ridge and end wall flashings have been installed.

Find the midpoint of the counterflashing and roll both ends of the flashing toward the center. The midpoint of the counterflashing is notched.

Starting with the midpoint at the ridge of the shelter, unroll the counterflashing down the arch joint.

Secure counterflashing to arch beams with retainer clips (figure 84). Leave bottom two feet of counterflashing loose at this time.

Electrical Power Connections
Connection of the power cable to the shelter must be accomplished by a qualified electrician. The 208/120 volt source line is normally run from an outside power distribution panel to the J1 receptacle on the shelter's internally mounted distribution panel.

Installation of Ground Skirt Flashing
Ground skirt flashing is attached basically to keep water and wind blown dust from entering the facility. These flashing pieces are attached to the bottoms of the end wall panels and arch panel sections 1 and 4.

Separate the two types of flashing (end wall and sidewall).

Attach the panel-to-panel flashing of the end/side panels to the ground skirt by pressing the rubber seal of the panel-to-panel flashing into the retainer channel on the ground skirt (figure 85).

Figure 84. Arch Counterflashing Attachment.

Figure 85. Installation of Ground Skirt Flashing.

Attach the lower ends of the arch counterflashing (the two feet of flashing left loose earlier) to the arch beams. At the arch joints make sure the ground skirt is under both the arch counterflashing and panel-to-beam flashing.

Anchor down the ground skirt flashing with sandbags or other suitable weights.

In some GP shelter configurations you may receive a membrane floor—refer to the technical order for its installation. Other flooring you may want to consider include plywood or AM-2 matting or in light loading situations, the new light-weight flooring, as existing ground loading conditions dictate. Once your shelter is up be sure all tools, dunnage, packing boxes and packing straps are placed back into the shelter's shipping container.

Striking Procedures

Striking of the GP shelter is essentially the reverse of the erection procedures. Remember to clean the various components as you disassemble them, not only to prolong the life of the facility but also to ensure customs clearance

goes smoothly. Refer to the technical order for the detailed procedures on folding components and packing the shipping container. Before starting to tear down the shelter, have a qualified electrician disconnect the electrical service. The 49th Materiel Maintenance Group's large structures unit type code XFBJ2 four-person team can provide technical experts to assist with erection, striking, or packing the GP shelter.

Removal of Ground Skirt Flashing

Remove sandbags from around ground skirt.

Separate ground skirt flashing from arch and end wall panel flashings and arch counterflashing.

Stack, roll up and secure (with ropes) ground skirt flashings.

Removal of End Wall Flashing

Remove exterior light assemblies and clamp assemblies from end wall ridges.

Disconnect exterior light cabling from distribution box and put lights and cables aside for packing later.

Remove retainer clips that secure the end wall flashing to the arch beams and end wall columns.

Separate end wall flashing from retainers in end wall panels.

Take down, fold and secure end wall flashing.

End Wall Disassembly

Separate door flashings from end wall columns.

Unscrew hinge mounting bolts of right door from end wall column.

Lower door to the ground and separate the upper and lower door sections.

Take down left hand door in similar fashion as right hand door.

Remove upper end wall panels by disconnecting flashing, removing the type B clamps and opening the panel latches. Take down both right and left upper panels.

Loosen the clamp at the top of column R1 and unpin the R2/RU-2 column connection and the bases of both columns R1 and R2. Remove the lower right end wall panel.

Remove the lower left end wall panel in a similar manner. Put both the right and left panels aside for disassembly later.

Disconnect the header clamp assembly from the arch beam.

Unpin and take down the header assembly. Separate the two header pieces.

Unclamp and remove the RU-2 and LU-2 columns (this also can be done later when the end arches are lowered).

Take down the end wall at the other end of the shelter using the same procedures.

Removal of Environmental Control Unit/Window Panels

Disconnect environmental control unit (ECU) ductwork.

Loosen thumbscrews and turn latches.

Remove window/ECU panels.

Tighten thumbscrews.

Removal of Ridge Flashing and Arch Counterflashing

Remove retainer clips holding counterflashing to arch beams.

Take down, roll up and secure arch counterflashing (roll both ends toward middle).

Separate ridge flashing seal from retainer strips on panels.

Take down and stack ridge flashing.

Removal of Interior Electrical System

Disconnect all overhead lights from their respective junction boxes.

Take down overhead lights.

Remove lights and cables from shelter and set aside for later packing.

Disconnect and remove cabling between all junction boxes and the distribution panel.

Take down and remove the power distribution panel from shelter.

Take down and remove all junction boxes from shelter.

Disassembly of Arches

Attach erection harness to arch and install safety guard (end wall panel) over cable.

Starting at the top of the arch disconnect all spacer bars and pin them to their arch beams. Detach all panel-to-panel flashing.
Using the anchor driving rod as a lever, lift panel section 4 enough to permit removal of pins holding panel to the basepad. Remove both pins.

Position and pin erection track to basepad.

Lift center of arch and remove pins in the lower hinges of the connection of panels 3 and 6.

Ensure panel section 4 arch beam ends are properly in the erection track. Pull outward on panel 4 as the winch releases the cable. The center of the arch will lower. Eventually pressure will not be required outward on panel 4 and gravity will take over allowing the winch to fully control the downward movement of the arch.

Lower arch to the ground, then remove erection harness and safety guard.

Remove pin from bottom hinge of panel 5 and 6 connection and lower second half of arch to the ground.

Separate panel 6 from panels 3 and 5 and remove from shelter area.

Move panels 4 and 5 from the shelter area and separate the two panel sections.

Disassemble panels 4, 5 and 6 by opening arch beam latches and separating panels from beams.

Remove pin from lower hinge connection of panel 2 and 3 and lower arch half to the ground.

Remove pin from top hinge of panels 2 and 3, separate panel 3 from panel 2, and disassemble panel 3.

Unpin panel 1 from basepad. Move panels 1 and 2 away from shelter area, separate the panels and disassemble both units.

Removal of Basepads

Remove wire rope clips from anchor cables and remove anchor cable from shear stakes.

Attach stake puller to shear stake.

Using the fulcrum bar and drive rod, pry stakes out of the ground (figure 86).

Clean stakes and basepads thoroughly.

Figure 86. Pulling Shear Stakes.

JOHN W. HANDY, Lt General, USAF
DCS/Installations & Logistics