BY ORDER OF THE SECRETARY OF THE AIR FORCE

AIR FORCE HANDBOOK 10-222, VOLUME 2
1 DECEMBER 1996

Operations

GUIDE TO BARE BASE ASSETS

This handbook summarizes the expedient facility and utility systems that USAF civil engineers are likely to site, install, and operate in a bare base environment. It is also designed to introduce you to the various major equipment items included in the Harvest Eagle and Harvest Falcon mobility packages. For detailed discussion of these various bare base assets see AFPAM 10-219, Volume 5, Bare Base Conceptual Planning Guide and the applicable equipment technical orders.

Page

Overview of Harvest Falcon and Harvest Eagle Programs 5
Airfield Related Assets 9
Navigational Aids 15
Water and Sanitation Systems 17
Power Production 23
Harvest Eagle Electrical Distribution System 25
Harvest Falcon Electrical Distribution System 27
Support Equipment 33
Softwall Shelters 39
Hardwall Shelters 45
Special-Use Bare Base Assets 49
Kitchens and Hygiene Equipment 55
Medical Facilities 61
Survivability 63

OPR: HQ AFCESA/CEXR (Mr Joseph H. Smith)
Certified by: HQ AFCESA/CEX (Colonel Randall L. Turner)
Pages: 108/Distribution: F

Figures

1. Bare Base Location 5
2. Emergency Airfield Lighting System Trailers 9
3. Mobile Aircraft Arresting System 10
4. AM-2 Aluminum Matting 11
5. Aircraft Fuel Storage Bladder 12
6. B-1 Revetments 13
7. Reverse Osmosis Water Purification Unit 17
8. Water Distribution Hose 18
9. Diesel Water Pump 19
10. Electrical Water Pump 19
11. Water Storage Bladder 20
12. 3000-Gal Water Storage Tank 20
13. Wastewater Disposal Trailer 22
14. 750-kW Generator 24
15. Generator Fuel Storage Bladder 24
16. Facility Distribution Panel 25
17. Equipment Rack 27
18. Primary Distribution Center 28
19. Secondary Distribution Center 28
20. Primary Electrical Cable 29
21. Cable Reels 30
22. Secondary Electrical Cable 30
23. Remote Area Lighting (RAL) System 34
24. Environmental Control Unit 35
25. 150-cf Refer 35
26. 1200-cf Refer 36
27. Water Chiller 37
28. Preway Heater 37
29. M-80 Water Heater 38
30. Frame-Supported Tensioned Fabric Structure 39
31. Dome Shelter 40

32. TEMPER Tents 41
33. General Purpose Medium Tent 42
34. General Purpose Large Tent 43
35. Expandable Shelter Container 45
36. General Purpose Shelter 46
37. Aircraft Hangar 47
38. ISO Container Facilities 48
39. K-Span Facility 48
40. 9-1 Kitchen 55
41. Mobile Kitchen Trailer 56
42. Field Laundry 57
43. Field Deployable Latrine 57
44. Shower/Shave Unit 58
45. Immersion Heater 59

Annexes

A. Schematic Diagrams and Layout Drawings
B. Standard Harvest Eagle and Harvest Falcon Sets
C. Water System Components
D. Bare Base Vehicle Packages
E. Bare Base Asset Technical Order Listing
F. Selected Harvest Falcon Unit Type Codes (UTCs)

THIS PAGE IS INTENTIONALLY LEFT BLANK.

OVERVIEW OF HARVEST FALCON AND HARVEST EAGLE PROGRAMS

Harvest Falcon and Harvest Eagle are the Air Force's two primary bare base equipment programs. Harvest Bare assets have been absorbed into the Harvest Falcon or Harvest Eagle programs, or have become obsolete, and are no longer maintained as an independent package.

Harvest Falcon provides complete facilities for long-duration bare base (figure 1) flying and support operations. Harvest Falcon assets are intended for Southwest Asia, but may be deployed to any theater if required. Assets may be deployed individually, or in one of four packaged UTCs:

Figure 1. Bare Base Location.

- **The 1100-person Housekeeping Set, XFBKA.** A stand-alone bare base personnel support package. Contains tents, hardwall shelters, area

lighting systems, basic water and electrical systems, latrines and showers, a kitchen facility, environmental control units, and other basic equipment.

- **The Industrial Operations Set, XFBRB.** Contains additional utility equipment and shop facilities for CE, Services, Transportation, Supply, and other base support organizations.
- **The Initial Flightline Set, XFBS1.** Supports flying operations for the first aircraft squadron. Contains an emergency airfield lighting system (EALS), BAK-12 and MAAS aircraft arresting systems, revetments, shop facilities for flightline organizations, and additional utility equipment.
- **The Follow-on Flightline Set, XFBS2.** Supports flying operations for an additional aircraft squadron. Each additional aircraft squadron requires a follow-on flightline set. Contains additional hardwall shelters and utility equipment to extend the capability of the initial flightline set to support additional aircraft.

Harvest Eagle provides facilities for bare base living and working or for supporting additional personnel at an existing installation. It does not, however, provide many flightline support assets. Harvest Eagle assets are intended for use in Europe or the Pacific, but may be deployed to any theater if required. Assets may be deployed individually, or in one of three packaged UTCs:

- **The 550-person Housekeeping Set, XFBR3.** A stand-alone warm-weather personnel support package. Contains tents for billeting and base support activities, latrines and showers, a kitchen facility, and power and water distribution systems.
- **The 550-person Utilities Package, XFFLU.** Contains high-voltage power generation and distribution equipment and environmental control units. When this package is added to the XFBR3 housekeeping set, the two Harvest Eagle UTCs together are approximately equivalent to one half of a Harvest Falcon XFBKA housekeeping set. .

- **The 550-person Cold Weather Set, XFBCW.** Contains tent heaters for use with the XFBR3 housekeeping set.

PACAF also maintains smaller Harvest Eagle-type assets, designed to expand the billeting and feeding capacities of an existing installation. These sets do not include latrines, showers, or water distribution equipment, so they cannot be used as stand-alone bare base packages.

- **The 275-person Housekeeping Set, XFFF6**, contains tents, heaters, lumber for tent floors, 30 and 60 kW generators, lightalls, and water treatment units.
- **The 275-person Kitchen Set, XFFF7,** contains kitchen, dining, and storage tents, refrigeration boxes, and kitchen equipment.

See Annex B for more detailed listings of the contents of each UTC.

THIS PAGE IS INTENTIONALLY LEFT BLANK.

AIRFIELD RELATED ASSETS

EMERGENCY AIRFIELD LIGHTING SYSTEM (EALS)
Complete lighting kit for runways up to 10,000' long and 150' wide. Includes runway edge and threshold lights, precision approach path indicator (PAPI) lights, incandescent and strobe approach lights, distance-to-go marker lamps, airfield arresting system marker lamps, taxiway lights, and battery-operated obstruction lights. Also includes generators, cables, control panels, transformers and regulators. Packaged on six mobile trailers (figure 2). EALS can be set up on a 10,000' runway by 6 people in about 6 hours.

Figure 2. Emergency Airfield Lighting System Trailers.

HARVEST EAGLE AIRFIELD LIGHTING KIT
Basic lighting kit for runways up to 10,000' long. Provides threshold and edge lights only; includes cables, regulators, generators and transformers.

Construction: 6 people, 4 hours.

EXPEDITIONARY BAK-12

Bidirectional aircraft arresting system for use with most fighters. Consult with RED HORSE or MAJCOM and TO 35E8-2-5-1 about the proper synchronization pressure for heavyweight aircraft such as F-22, F-15E and F-111. Install one system at each end of the runway, 950' to 2500' from the threshold. Check asphalt runways to see if concrete "pressure pads" have been provided where barriers should be installed. Anchor BAK-12s to concrete pads or buried "deadmen." Installation: 12 people, 10 hours. (Normally, this type of BAK-12 installation is accomplished by RED HORSE.)

MOBILE AIRCRAFT ARRESTING SYSTEM (MAAS)

BAK-12 arresting gear mounted on a mobile trailer (figure 3). Anchor to concrete pads, or stake into soil or asphalt. Installation: 6 people, 2 hours. An upgrade kit (lightweight Fairlead beam and longer nylon tapes) for the MAAS is entering the inventory which will permit MAAS trailer units to be

Figure 3. Mobile Aircraft Arresting System.

set further back from the runway edge. This will allow wide-body aircraft to safely use the runway without concern over wing clearances. The upgrade kit will also permit bi-directional engagements.

AM-2 ALUMINUM MAT

Two-inch thick interlocking aluminum panels normally used for aircraft parking ramps or pads, taxiways, and hangar floors. Individual sections are 2' wide, and either 6' or 12' long (figure 4). AM-2 is typically shipped in bundles, each of which contains 4 short and 16 long sections, and will cover 432 square feet. AM-2 can be assembled in any width (in 6' increments) and any length (in 2' increments). Site preparation and drainage are critical. For large installations over bare soil, construct "French drains" of rock or stone directly beneath the AM-2, every 100', at a 60 degree angle to the direction of aircraft travel.

Figure 4. AM-2 Aluminum Matting.

FUEL BLADDERS

Collapsible rubber bladders used to store aircraft fuel (figure 5). Six 26' x 63' 50,000-gallon bladders will support most bare base fighter squadron

operations assuming a resupply capability has been established. If soil is rocky or uneven, install bladders on a 2” bed of sand. Protect with continuous berms 4' high and 6' wide at the base and install protective liners inside the bermed areas. These bladders are commonly found with the R-14 refueling unit.

Figure 5. Aircraft Fuel Storage Bladder.

B-1 REVETMENTS

Corrugated steel panels, assembled into sections 7' wide, 12' long, and 16' high (figure 6). A single kit provides enough panels for 21 of the 12' sections, for a total length of 252'. Sections can be joined end to end for straight revetments, or butted together at right angles for "U" shapes, "E" shapes, etc. For "U" shapes and flow-throughs, one kit will protect one fighter. For clustered arrangements, three kits will protect four fighters. Fill revetments with dirt, and cap to prevent dust from blowing out or water from accumulating. Single revetment installation: 12 people, 90 hours.

Figure 6. B-1 Revetments.

A-1 REVETMENTS

Essentially the same as B-1 revetments, but only 12' high. Used for protecting critical facilities rather than aircraft.

THIS PAGE IS INTENTIONALLY LEFT BLANK.

NAVIGATIONAL AIDS

Navigation aids are normally provided by Communications personnel; these types of assets are not part of the Harvest Eagle or Harvest Falcon packages.

TACTICAL AID TO NAVIGATION (TACAN)
Generates an omnidirectional radio signal to help pilots locate the airfield. Typically placed off one end of the runway, 1000' off the runway centerline. Needs level site, 25' square, and vehicle access. May need wooden support stands and steps. Plan to provide utility support.

RADAR APPROACH CONTROL (RAPCON)
Allows ground-based radar controller to track approaching aircraft and verbally direct their descent along the glide path. Placed 500' off the runway centerline at midfield, where both approaches are observable and free of obstructions. Needs level site, 50' square, and vehicle access. Plan to provide utility support.

MOBILE TOWER AND RADIO
Placed to allow maximum visibility of airfield and unobstructed radio transmission. Needs level site, 25' square, with vehicle access and utility support.

THIS PAGE IS INTENTIONALLY LEFT BLANK.

WATER AND SANITATION SYSTEMS

REVERSE OSMOSIS WATER PURIFICATION UNIT (ROWPU)
Removes suspended and dissolved solids from nearly any water source. For planning purposes, one ROWPU can produce 600 gph of potable water from seawater, and can support 600 people (figure 7). Needs up to 22 kW of power from an external source. Can produce for 20 hours per day; allow four hours per day for backwashing and maintenance. ROWPU operation produces up to two gallons of brine water for each gallon of potable water. Brine water disrupts the treatment process of wastewater from latrines, showers, laundries, or kitchens, and so cannot be treated in the same sewage lagoons. Brine water should be used for grounding pads, construction, or dust control; piped into its own evaporation lagoon; or returned to a large body of water.

Figure 7. Reverse Osmosis Water Purification Unit.

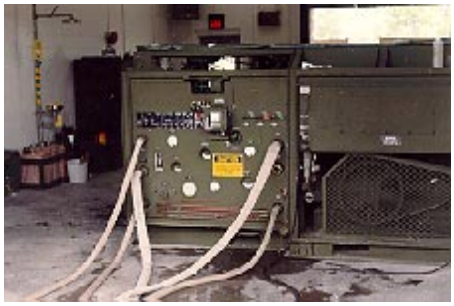

HARVEST EAGLE WATER DISTRIBUTION SYSTEM
Basic water treatment, storage, distribution, and wastewater removal system for short-term use, supporting up to 550 people. Can be combined with additional sets for larger deployments. Uses diesel and electrically driven

pumps and flexible, quick-connect 2-inch hoses (figure 8) to distribute water, and to remove graywater discharge from showers, kitchens, and laundry units. Does not handle sewage from latrines. Includes a ROWPU, water storage bladders and tanks, drinking water chillers, and freeze-protection systems. See Annex C for components listing.

Figure 8. Water Distribution Hose.

HARVEST FALCON WATER DISTRIBUTION SYSTEM

Water storage, and distribution system for long-term use. Uses diesel and electrically driven pumps (figures 9 and 10) and lightweight plastic piping to distribute water. Pipe sections are color coded: green for raw water, white for potable water. Flexible, quick-connect hoses are included for raw water lines, potable water branch lines, and for initial stand-alone setup while plastic piping is being assembled. Includes aircraft and vehicle wash racks, water storage bladders and tanks, and fill stands. To minimize intersections with roads and walkways, design the potable water loop as an out-and-back loop in a straight line or L-shape along the service sides of water-using facilities, rather than as a complete circle around the camp. Set up plastic pipe on the ground first, then bury as time permits. Bury piping 18" deep to provide insulation and control expansion. Keep accurate maps. See Annex C for components listing.

Figure 9. Diesel Water Pump.

Figure 10. Electrical Water Pump.

WATER STORAGE BLADDERS

Collapsible rubber bladders used to store raw or potable water (figure 11). Bladders are available in three common sizes: 20,000-gallon (23' x 27'), 10,000-gallon (21' x 21'), and 3000-gallon ("onion" bladders, approximately 7' in diameter (figure 12)). If soil is rocky or uneven, install bladders on a 2" bed of sand. For desert operations provide shade to prevent excessive heat buildup.

Figure 11. Water Storage Bladder.

Figure 12. 3000-Gallon Water Storage Tank.

HARVEST FALCON WASTEWATER SYSTEM

Two-tier system. Initially expedient latrines and Harvest Falcon latrines are used; wastewater disposal trailer used to empty Falcon latrines. For longer term deployments plastic sewer lines are installed leading to stabilization and evaporation lagoons. Primarily a gravity flow system; however, a few packaged lift stations are available.

EVAPORATION BEDS
Small graywater lagoons built downwind of showers, kitchens, and laundries (not used for latrines). Separate beds may be needed for each graywater source unless wastewater can be transported to a central lagoon. Construct seven adjacent beds, each 22' square and 1' deep, and use one each day of the week.

STABILIZATION LAGOON
Large wastewater lagoon built downwind of base; supplied by bare base piping system from latrines, showers, kitchens, and laundries. Allows natural decomposition and photosynthesis to stabilize wastewater before it is drained away from the base. A 127'-square lagoon can support 1100 people; additional and/or larger lagoons are needed for larger populations.

EVAPORATION LAGOON
Large wastewater lagoon built downwind of base if no off-base drainage is possible. Fed by discharge from stabilization lagoon. A 164'-square lagoon can support 1100 people for about 45 days; additional and/or larger lagoons must be built as needed for longer deployments or larger populations.

GREASE TRAP
Grease trap assemblies are included with Harvest Eagle and Harvest Falcon 9-1 kitchens to prevent grease from clogging treatment lagoons or attracting pests. If premanufactured units are not available, install a series of three or more steel drums in the drainage line between kitchen and wastewater disposal system. Drain the kitchen into the first drum, drain the first drum into the second, and so on. Install the drain lines about 3' above the bottom of the drums but turn their inlet ends down to within 6" of the bottom, so that only water at the bottom can enter the drain line--trapping the grease floating at the 3' level. Remove solidified grease daily, and dispose of it with other solid waste.

WASTEWATER DISPOSAL TRAILER

1,000-gallon mobile sewage tank and vacuum pump (figure 13), used for cleaning latrine holding tanks until they can be connected to the bare base distribution system. Requires a heavy truck with a pintle hook to tow it. Waste must be emptied into a lagoon, commercial sanitary sewer, or uninhabited area downwind from the base and away from drinking water sources.

Figure 13. Wastewater Disposal Trailer.

SANITARY LANDFILL

Earth-covered disposal site for garbage and other solid waste. Use a bulldozer to excavate a trench, compact the waste, and cover the waste each day with 6" of earth. When full, cover the trench with a final 2' layer of earth and mark its boundaries.

POWER PRODUCTION

MOBILE ELECTRIC POWER (MEP) GENERATORS

MEP-005: 30 kW, 120/208V, 3-phase, diesel-powered. Widely available in Harvest Eagle, but not typically part of Harvest Falcon packages. Derate to 24 kW for 50 Hz operation

MEP-006: 60 kW, 120/208V, 3-phase, diesel-powered. Widely available in both Harvest Eagle and Harvest Falcon. Use as general purpose generator in Harvest Eagle and as emergency backup generator in Harvest Falcon. Derate to 48 kW for 50 Hz operation

MEP-007: 100 kW, 120/208 or 240/416V, 3-phase, diesel-powered. Mission essential or emergency backup generator. Derate to 80 kW for 50 Hz operation. Not typically part of Harvest Eagle, but widely available in Harvest Falcon.

MEP-012A: 750 kW, 2400/4160V, 3-phase, diesel-powered (figure 14). Basic generator for large-camp power plant use in Harvest Falcon. Will eventually be found in Harvest Eagle encampment if supplemental utilities package (UTC XFFLU) is used. Can operate alone, or can be synchronized with others to produce high-capacity power plants. Derate to 625 kW for 50 Hz operation. In hot weather, provide shade to increase generator efficiency. Use berms or revetments for noise control and survivability. For high-threat areas, install in dispersed, closed loop system.

Figure 14. 750-kW Generator.

FUEL BLADDERS

Collapsible rubber bladders used to store fuel (figure 15). A 12' x 42' 10,000-gallon bladder will support two diesel MEP-012As for about 4-5 days. If soil is rocky or uneven, install bladders on a 2" bed of sand. Protect with continuous berms 4' high and 6' wide at the base. Use protective liner inside bermed area.

Figure 15. Generator Fuel Storage Bladder.

HARVEST EAGLE ELECTRICAL DISTRIBUTION SYSTEM

A-PANEL
60 kW, 3-phase, 200 amp load center. Receives power from MEP-006 and distributes it to four B-panels.

B-PANEL
15 kW, 3-phase, 60 amp load center. Receives power from A-panel, and distributes it to twelve facility distribution boxes.

DISTRIBUTION BOX (figure 16)
20 amp, single phase. Receives power from B-panel, and distributes it to six lights and 12 duplex outlets in the facility.

Figure 16. Facility Distribution Panel.

THIS PAGE IS INTENTIONALLY LEFT BLANK.

HARVEST FALCON ELECTRICAL DISTRIBUTION SYSTEM

EQUIPMENT RACK

Remote panel (figure 17) for control and synchronization of up to four MEP-012As, so they can act in phase with each other as a power plant. Install in an expandable shelter container (ESC) or other hardwall shelter to provide some noise and heat protection for operators.

Figure 17. Equipment Rack.

PRIMARY DISTRIBUTION CENTER (PDC)

High-voltage load center (figure 18). Receives power from up to four MEP-012As, and distributes it over six 200-amp primary circuits. Each circuit can support 10 to 15 secondary distribution centers (SDCs), or 6 to 10 if air conditioners are used. The PDC is a high voltage switching station that serves as a means of separating the high voltage onto individual circuits and distributing it throughout the system.

Figure 18. Primary Distribution Center.

SECONDARY DISTRIBUTION CENTER (SDC)

Transformer and 150 KVA low-voltage load center (figure 19). Receives 2400/4160V power from PDC or another SDC, steps it down to 120/208V, and distributes it over 16 60-amp secondary circuits. Also has two 3-phase primary output terminals to allow 2400/4160V power to be fed to two other SDCs, each of which can feed two others, and so on, up to the capacity

Figure 19. Secondary Distribution Center.

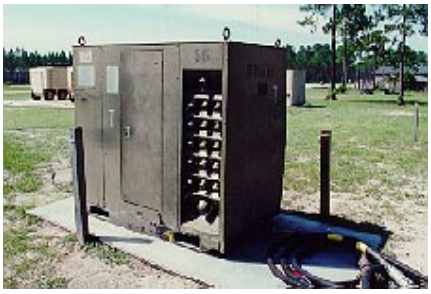

of the primary circuit. If air conditioners are used, use only 12 of the 16 output circuits. Transformer section can be bypassed, so an SDC can be fed from a MEP-006 or MEP-007 and used only as a distribution center.

POWER DISTRIBUTION PANEL (PDP)

Circuit breaker panel for a single facility. Receives 120/208V power from SDC, and divides it into separate circuits to run a given facility's HVAC, lighting, and utility outlet systems. PDPs come in several sizes. Standard PDP for a single facility has one 120/208V cannon plug input, one 120/208V cannon plug output for an environmental control unit, four 20-amp 120V outputs for lighting, and one 25-amp 120V convenience outlet.

CABLE

Primary: #1/0 insulated aluminum wire, used for high-voltage runs between generators and PDCs (figure 20), between PDCs and SDCs, or between one SDC and another. Use one cable for each of the three phases; it comes on a pallet of three 3000' cable reels mounted side by side (figure 21). Limit primary runs to one mile if the load is concentrated at the

Figure 20. Primary Electrical Cable.

end of the circuit, or two miles if loads are spread fairly evenly along the length of the run.

Figure 21. Cable Reels.

Secondary: 3-phase, 4 or 5 wire insulated cable, used for low-voltage runs between SDCs and final loads. Comes in 50' and 100' lengths, with cannon plugs at each end to connect to SDCs, PDPs, or other secondary cables (figure 22). Secondary cable runs should be limited to 150' to conserve cable and minimize voltage drop, but runs of up to 800' are acceptable when necessary.

Plan on providing initial power to mission critical facilities first using smaller MEP generators. Concentrate then on establishing power plants using the 750 kW units and laying out the distribution system above ground. As mission essential facilities are brought onto the power grid, set up the smaller MEP generator as backup units. Once entire electrical system is operational and if the contingency duration warrants it, start to bury distribution lines. Bury primary directly in the ground, 12 to 18" deep, with at least 6" of horizontal spacing between each cable. Bury secondary at least 8" deep. Keep accurate maps and drawings of where cables are buried.

Figure 22. Secondary Electrical Cable.

THIS PAGE IS INTENTIONALLY LEFT BLANK.

SUPPORT EQUIPMENT

REMOTE AREA LIGHTING (RAL) SYSTEM

Used for general lighting along flightline, around POL or LOX plants, etc. Contains 13 telescopic two-lamp light poles, four 375' cable sets, and an aluminum container/control box (figure 23). Connect one light pole to the control box, and connect the others every 125' along the cable sets. Up to two of the cable sets can be connected to the control box; connect the others to the ends of the first cable sets. RALS require outside power source, such as a generator or feed from a SDC.

ENVIRONMENTAL CONTROL UNIT (ECU)

208V, 3-phase electric HVAC system for bare base facilities (figure 24). 32,400 BTUH electric heating coil, 54,000 BTUH R-22 DX air conditioner, and variable speed fan are contained in a steel housing, 6'L x 4'W x 2'8"H. Place directly on the ground, adjacent (within 5') to the facility's supply and return air duct openings. Shipped six per pallet. Internal forklift slots. An aggressive preventive maintenance and repair program is critical.

HDU-36 ARCTIC HEATER

Diesel-fired 120,000 BTUH heater with electric blower, contained in a steel housing, 3'6"L x 3'W x 2'8"H. Place on level ground, within 5' of the facility's supply and return air duct openings. Shipped twelve per pallet, with connection ducts on top. Internal fuel tank, forklift slots.

Figure 23. Remote Area Lighting (RAL) System.

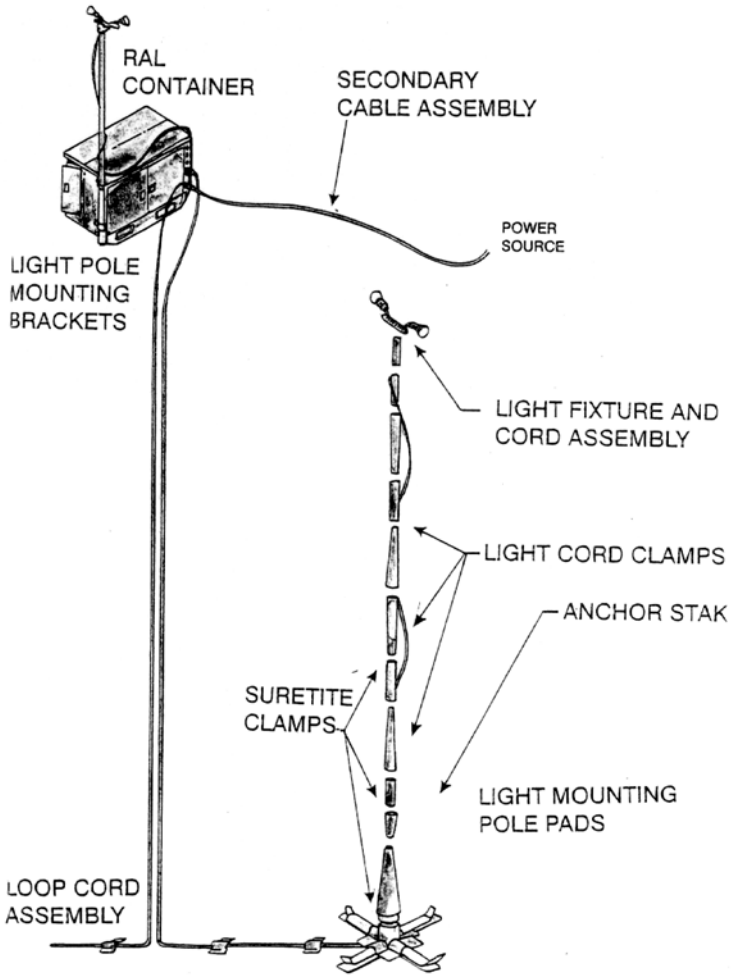

Figure 24. Environmental Control Unit.

150 CUBIC FOOT REFER

One-piece field refrigeration unit with rear-mounted 5,000 BTUH DX refrigeration unit, and single door in front (figure 25). Used for food service, mortuary, or medical applications. Approximately 7' x 7' x 7' overall. Place on level ground, with at least 3' of clear space around the condenser.

Figure 25. 150-cf Refer.

1200 CUBIC FOOT REFER

Large refrigeration unit assembled on site from insulating panels, with separate 18,000 BTUH refrigeration unit (figure 26). Supports food service operations. Approximately 13' wide. 17' long, and 8' high. Set up on flat, level, well-compacted site, with at least 6' of clear space on ends to allow for installation and ventilation of the condensers. Setup: 8 people, 8 hours, with forklift support.

Figure 26. 1200-cf Refer.

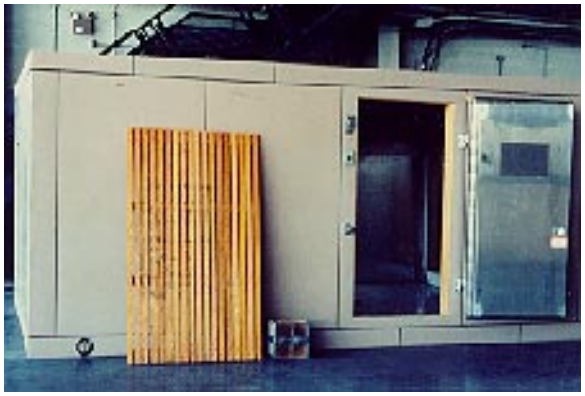

WATER CHILLER

An air-cooled, gasoline-driven chiller (figure 27) capable of cooling water from 120 degrees Fahrenheit to 60 degrees Fahrenheit at a delivery rate of 40 gph. Can be skid-mounted or water trailer-mounted.

Figure 27. Water Chiller.

PREWAY 70,000 BTU HEATER

Radiant type heater operated by diesel fuel (figure 28). Designed for floor installation in general purpose or TEMPER tents. Primarily supports Harvest Eagle facility assets.

Figure 28. Preway Heater.

M-80 HEATER

The primary boiler component (figure 29) for the M-1958 bath unit, Harvest Falcon shower/shave unit, Harvest Falcon kitchen, and bare base laundry. Operates on gasoline or diesel fuel and also requires 208v electrical service. Maintains water temperature in the 160-210 degrees Fahrenheit range, 24 gallon capacity.

Figure 29. M-80 Water Heater.

SOFTWALL SHELTERS

FRAME-SUPPORTED TENSIONED FABRIC STRUCTURE (FSTFS)
Large shelter used as a maintenance area or warehouse (figure 30). Constructed of synthetic fabric over aluminum frame sections, with steel tension cables to provide rigidity. There is no floor; shelters can be set up directly on pavement, or floors can be built from AM-2. Shelters require periodic maintenance to keep the tensioning cables properly adjusted. Erection of FSTFSs is accomplished by 49 MMG or RED HORSE personnel.

Figure 30. Framed-Support Tensioned Fabric Structure.

The 8400 square foot Type A shelter comes packaged in four containers, and measures 144' long, 60' wide, and 26' high when set up. End sections have vehicle doors, 18' wide and 14' high. If heating is required, use eight HDU-36 arctic heaters. Cooling may not be realistic in some situations. Setup: 8 people, 48 hours, using a 10K forklift.

The 4200 square foot Type B shelter comes packaged in three containers, and measures 72' long, 60' wide, and 26' high when set up. End sections have vehicle doors, 18' wide and 14' high. If heating is required, use four HDU-36 arctic heaters. Cooling may not be realistic in some situations. Setup: 8 people, 32 hours, using a 10K forklift.

"DOME" SHELTER

Large shelter used as a warehouse, maintenance area, or small aircraft hangar (figure 31). Constructed of synthetic fabric over aluminum arch sections, with steel tension cables to provide rigidity. The central bay area is 60' square, 10' high at the eaves, and 24' high at the peak. Curved clamshell-type doors are attached at each end of the central bay, and add 30' to each end when closed, making the overall structure 120' long and 60' wide. There is no floor, shelters can be set up directly on pavement, or floors can be built from AM-2. If heating is required, use two HDU-36 arctic heaters. Setup: 8 people, 32 hours, using only the tools included with the shelter. Erection accomplished 49 MMG or RED HORSE personnel.

Figure 31. Dome Shelter.

TEMPER TENTS

All-purpose shelter used for billeting, work areas, latrines and showers, storage, etc (figure 32). Constructed of synthetic fabric on an aluminum frame, with a rubberized floor mat. Modular sections are 20’ wide and 8’ long, and can be joined together end-to-end to create shelters of any length. An entry vestibule, 5’ wide and 11’ long, is typically installed at one end only. A standard billeting tent consists of four sections, and is 32' long. White fabric inner liner improves comfort and provides HVAC ducts. Insulated floor available for cold weather use. Lighting and electrical service equipment is included. A 4-section tent needs one ECU. During setup, pull bottom edges of tent frames inwards before installing fabric covering to prevent seams and zippers from being stretched too tightly over the frame. Setup: 4 people, 2 hours.

Figure 32. TEMPER Tents.

TEMPER tents come packaged in "ship/store" type reusable containers, each about 7' long, 9' wide, and 8' high. Each container holds four tents and related equipment, including power distribution panels, lighting sets,

fire extinguishers, and cots. When emptied, the containers can be lined up as a sound barrier around the power plant or used for storage, but must be kept available for repacking upon completion of the deployment.

CANVAS TENTS

GP Medium: 16' x 32', canvas on wood poles or hardback frame (figure 33). White fabric inner liner, if available, improves comfort in hot or cold weather. Need one oil or wood burning heater per tent for cold weather use. Some GP mediums have duct openings for ECUs or arctic heaters. Setup: 4 people, 40 minutes.

Figure 33. General Purpose Medium Tent.

GP Large: 18' x 52', canvas on wood poles (figure 34). Need two oil or wood burning heaters per tent for cold weather use. Setup: 6 people, 80 minutes.

Figure 34. General Purpose Large Tent.

THIS PAGE IS INTENTIONALLY LEFT BLANK.

HARDWALL SHELTERS

EXPANDABLE SHELTER CONTAINER (ESC)

Small shelter used as a maintenance shop, control center, office, etc (figure 35). Comes packaged as a self-contained unit, 8' long, 13' wide, and 8' high, and expands to 21' x 13' x 8' high, including a floor. Personnel and cargo doors are located in the center of the long sides. Lighting and electrical service equipment is included. Needs one ECU. Setup: 6 people, 2 hours.

Figure 35. Expandable Shelter Container.

GENERAL PURPOSE (GP) SHELTER

Medium-sized shelter used as a maintenance area, warehouse, etc (figure 36). Comes packaged in one shipping container, 10' long, 8' wide, and 8' high. Measures 48' long, 31' wide, and 12' high when set up. End panels have doors for personnel and cargo. There is no floor; GPs can be constructed directly on pavement, or floors can be built from wood or AM-2. Lighting and electrical service equipment is included. Needs two ECUs.

Figure 36. General Purpose Shelter.

Setup involves assembling aluminum honeycomb panels into segmented arches, with one large panel on each side forming the bases of each arch, and four smaller panels forming the roof. Five arches joined together and pinned to pre-set anchor plates make up the basic structure, and rubber flashings cover the joints between arches. Setup: 6 people, 15 to 20 hours.

AIRCRAFT HANGAR (ACH)

Large shelter used as a fighter hangar or warehouse (figure 37). Comes packaged in four shipping containers, and measures 125’ long, 77’ wide, and 25' high when set up. The central bay area is 73’ long and 77’ wide. Curved "clamshell" doors, built of lightweight fabric over a collapsible aluminum frame, add 26’ to each end when closed. The four shipping containers are used as personnel doors and offices at the corners. There is no floor; ACHs can be set up directly on pavement, or floors can be built from AM-2. Lighting and electrical service equipment is included. If heating is required, use eight HDU-36 arctic heaters. Cooling may not be realistic in some situations.

Figure 37. Aircraft Hangar.

Setup involves assembling aluminum honeycomb panels into segmented arches, with one large panel on each side forming the bases of each arch, and 12 smaller panels forming the roof. Seven arches joined together and pinned to pre-set anchor plates make up the basic structure, and rubber flashings cover the joints between arches. Setup: 12 people, 40 hours. This facility is normally erected by 49 MMG or RED HORSE personnel.

ISO CONTAINERS

Facilities that serve as their own shipping container and as a shelter once deployed (figure 38). Commonly are sized at 8' x 8' x 20', some are made in an expandable mode with areas up to about 400 SF. Normally are used for specialized purposes such as hospital operating rooms or command posts.

Figure 38. ISO Container Facilities.

K-SPAN FACILITIES

Arched buildings made on-site from rolls of galvanized steel or aluminum using an automatic building machine (figure 39). Machine forms structural arches of varying widths as well as straight sections for end walls. The facilities manufactured commonly are used for covered storage buildings, shops or hangars. RED HORSE personnel normally construct these facilities.

Figure 39. K-Span Facility.

SPECIAL USE BARE BASE ASSETS

TEMPER tents, ESCs, and GP shelters are available with slight modifications or specialized equipment configurations needed for various maintenance and support functions. The following assets are included in Harvest Falcon packages, or may be deployed individually (bear in mind that the make up of the following UTCs/asset configurations may change through periodic updates and field experience).

AIRCRAFT MAINTENANCE SHOPS

Avionics, 15 KVA, XFBM1: One ESC for use as an avionics maintenance shelter. Includes a 15 KVA frequency converter (120/208V, 3-phase, 60 Hz input, 400 Hz output), and equipment/MRSP. Requires three parallel circuits from an SDC – two for the ESC and one for the air conditioner.

Bearing Cleaning, XFBNB: One ESC with equipment MRSP for use as an aircraft bearing cleaning shop. Includes a gasoline-powered MC-2A compressor.

Electrical Maintenance, XFBNE: One 15 KVA avionics ESC with furniture, supplies, and equipment for use as an electrical/battery maintenance facility. Includes an emergency shower, electrical work benches, and a ventilation system. Requires potable water supply.

Life Support, XFBN5: One ESC with one desk, two tables, two chairs, and equipment/MRSP for use as a life support equipment work area.

NDI Lab, XFBNN: One ESC with furniture, supplies, and equipment for use as an NDI Lab. Includes gasoline-powered MC-2A compressor, X-ray machine, pentrometer set, and pulse generator. Requires potable water supply.

Parachute Shop, XFBN1: One special-configuration double ESC, consisting of two interconnected ESCs, for use in parachute drying and packing. Includes two 400,000 BTU JP-4 powered heaters for chute drying, and MRSP.

Pneudraulic/Environmental, XFBNP: One ESC with utility equipment for use as a limited aircraft pneudraulics and environmental shop. Includes a 5 KVA frequency converter, water, electrical and compressed air connections, and MRSP.

Power/Nonpower AGE, XFBNR: Two GP shelters with equipment and MRSP for use with powered and non-powered AGE. Includes bench and pipe vise, AGE set, battery charger, and eight bundles of AM-2 matting for flooring. Requires 60 PSI water source.

Propulsion, XFBEB: One 8400 square foot FSTFS tent for use as a jet engine maintenance shelter. Includes 19 bundles of AM-2 matting.

Propulsion, XFBEA: One GP shelter with limited aircraft engine shop equipment, for use as a jet engine maintenance facility. Includes four bundles of AM-2 matting for flooring.

Structural/Welding, XFBNQ: One GP shelter with equipment and MSRP for use as a limited machine/structural/welding shop. Requires 60 psi water source. Includes four bundles of AM-2 matting for floor.

LOGISTICS SHOPS

Fuels Lab, XFBFB: One ESC for use as a fuels lab for sampling and testing of aircraft fuels. Shelter only; needs UTC JFDES to provide functional capability for fuels operations.

Packing and Crating Warehouse, XFBRA: One 8400 square foot FSTFS tent and 19 bundles of AM-2 matting for flooring.

Supply Warehouse, XFBAE: One 8400 square foot FSTFS tent, two ESCs, a 1200-cf refer box. Requires 19 bundles of AM-2 matting for flooring.

Vehicle Operations/Maintenance Facility, XFBTD: Two 4200 square foot FSTFS tents, one TEMPER tent, 10 bundles of AM-2 matting, and office equipment and supplies.

SUPPORT FACILITIES

Admin Facility, XFBA5 (four each) or XFBA6 (12 each): Four-section TEMPER tents, each with two desks, two tables, and six chairs.

Briefing Facility, XFBS5: Two four-section TEMPER tents, each with one table and 50 chairs.

Chapel, XFBGC: One four-section TEMPER tent with religious equipment and supplies.

Laundry, XFBV5: One four-section TEMPER tent with field laundry equipment and supplies, to support 550 people. Needs 60 psi water source.

Mortuary, XFBXN: One four-section TEMPER tent with two 150-cf refer boxes and mortuary equipment. Needs 60 psi water source and backup power.

CIVIL ENGINEER SHOPS

Barrier Maintenance/Power Production, XFBCL: One GP shelter and four bundles of AM-2 for flooring.

Electric Shop, XFBC5: One four-section TEMPER tent with a grinding machine, cable cutter, and voltage tester.

Engineering Management, XFBNF: Two four-section TEMPER tents, with four desks, four tables, 12 chairs, and mobile blueprint machine.

Entomology, XFBCD: One four-section TEMPER tent with a fog generator, insecticide sprayer, and chemicals.

Fire Station, XFBCF: Three four-section TEMPER tents with 24 cots, two chairs, two tables, and two desks.

Heavy Equipment, XFBCE: One GP shelter with a diesel-powered MC-5 compressor. Requires four bundles of AM-2 for flooring.

Liquid Fuels, XFBC9: One four-section TEMPER tent with a grinding machine.

Metal Shop, XFBC7: One four-section TEMPER tent with an MC-2A compressor.

Power Plant, XFBEX: One ESC and related support equipment for

primary power plant operations. Includes one PDC, one SDC, two 10K fuel bladders, one remote-control equipment rack, one RALS unit, two primary cable skids, and spares.

Plumbing, Water/Waste, XFBC2: One four-section TEMPER tent with a pipe vise/thread cutter.

Refer Shop, XFBCB: One four-section TEMPER tent with a grinding machine, arbor press, and vacuum pump.

Tool Storage, XFBC3: One four-section TEMPER tent.

THIS PAGE IS INTENTIONALLY LEFT BLANK.

KITCHENS AND HYGIENE EQUIPMENT

HARVEST EAGLE/HARVEST FALCON KITCHEN (XFBK3)
Food service complex based on TEMPER tent sections (figure 40). Standard "9-1" kitchen serves 1100 people and uses 13 sections for dining area, 5 for kitchen, and 8 for cleaning and food preparation. Includes six 150-cf refer boxes, one 1200-cf walk-in refer and two ice machines. Needs 7 ECUs. Smaller version serves 550 and uses 7 sections for dining area and 10 for kitchen/cleaning, and includes four 150cf refer boxes. Both need power, water, wastewater, and HVAC support. Construct concrete floor for long-term deployments.

Figure 40. 9-1 Kitchen.

MOBILE KITCHEN TRAILER (MKT) (XFBK5)
Expandable, self-contained mobile kitchen; can support 250 people (figure 41). No dining area or refrigeration included. Needs no power, water, wastewater, or HVAC connections, although additional internal and external lighting would improve convenience of use. Designed for temporary use while larger kitchen facilities are being set up, or as a "satellite kitchen" to support emergency operations away from the main base.

Figure 41. Mobile Kitchen Trailer.

FIELD LAUNDRY UNIT:
Single set supports 550 people, and includes washer, diesel-fired dryer, and related hardware (figure 42). Two or more sets can fit inside a 4-section TEMPER tent, but additional space may be needed for storage, laundry sorting, etc. Each set needs one 208V, 60-amp cable feed from an SDC, and up to 480 gph of water. Use M-80 heater if hot water is needed. Commercial washers and dryers are programmed to replace these systems in the future.

Figure 42. Field Laundry.

FIELD LATRINE

Modular system; two latrine units fit end-to-end inside a standard 4-section TEMPER tent, and support 275 people (figure 43). Each unit contains six toilets, a urinal trough, and a hand-washing sink. Can be connected to bare base water distribution and wastewater removal piping. If not connected, waste holding tanks must be cleaned daily. Even if connected to the waste system, pumping may still be required due to low liquid to solid waste ratios. Construct concrete floor for long-term deployments. Setup: 4 people, 2 hours.

Figure 43. Field Deployable Latrine.

SHOWER/SHAVE UNIT

Modular system; fits inside a standard four-section TEMPER tent, and supports 275 people (figure 44). Contains 12 showers and 12 sinks with mirrors. Kit includes an M-80 diesel-fueled water heater, pumps, and supply/drain hoses. Can be connected to bare base water distribution and wastewater removal piping. Needs one ECU for heating/cooling in extreme conditions. Locally-purchased ventilation fan may be sufficient in moderate conditions. Construct concrete floor for long-term deployments. Setup: 4 people, 3 hours.

Figure 44. Shower/Shave Unit.

IMMERSION HEATER

Gasoline-fired 35,000 BTU heater (figure 45) used to heat water in corrugated cans for mess kit laundry and other purposes. Heater body is watertight sheet metal consisting of a doughnut-shaped combustion chamber and stack assembly welded together. Over all length with stove pipe sections 9’8”, weight 44 pounds.

Figure 45. Immersion Heater.

THIS PAGE IS INTENTIONALLY LEFT BLANK.

MEDICAL FACILITIES

These facilities are generally erected by medical personnel. CE prepares the site, provides water, power, sanitation, maintenance support, etc.

AIR TRANSPORTABLE CLINIC (ATC)
Supports an operational squadron with population of 300 to 600 personnel. Requires site preparation (1,500 SF) for tentage. Needs 15 kW of power.

AIR TRANSPORTABLE HOSPITAL (ATH) - 10 BED
(The first subset of the 50-Bed ATH) A TEMPER tent/hard wall (ISO container) sheltered 10 bed facility with minor surgery and hospitalization services, capable of supporting a deployed force for 30 days without resupply. Requires site preparation (26,000 SF), 92 kW of power, 2,000 gpd of potable water, 85 lbs/day of ice, and solid/liquid waste disposal support.

AIR TRANSPORTABLE HOSPITAL (ATH) - 25 BED
(The second subset of the 50-Bed ATH) A TEMPER tent/hard wall (ISO container) sheltered 25 bed facility with full surgery and hospitalization services, capable of supporting a deployed force for 30 days without resupply. Requires site preparation (40,000 SF), 170 kW of power, 3,500 gpd of potable water, 150 lbs/day of ice, and solid/liquid waste disposal support.

AIR TRANSPORTABLE HOSPITAL (ATH) - 50 BED
A TEMPER tent (70 sections)/hard wall (3 ISO containers) sheltered 50 bed facility with full surgery and hospitalization services, capable of supporting a deployed force for 60 days without resupply. Requires site preparation (50,000 SF), 200 kW of power, 5,500 gpd of potable water, 300 lbs/day of ice, and solid/liquid waste disposal support.

CONTINGENCY HOSPITAL
A 250-bed hospital comprised of 250 TEMPER tent sections, 31 ISO containers and a 9-1 kitchen. Requires site preparation (28 acres), 1,300 kW, 22,000 gpd of potable water, 1,250 lbs/day of ice, and solid/liquid waste disposal

AEROMEDICAL STAGING FACILITY
A facility capable of receiving and evacuating 250 casualties every 24 hours. Comprised of 168 TEMPER tent sections. Requires site preparation (90,000 SF), 200 kW, 12,000 gpd of potable water, 1,250 lbs/day of ice, and solid/liquid waste disposal.

TRANSPORTABLE BLOOD TRANSSHIPMENT CENTER
A small blood storage facility normally collocated with a contingency hospital consisting of eight TEMPER tent sections. Requires site preparation (4,000 SF), 200 kW, 300 gpd of potable water and 800 lbs/day of ice.

SURVIVABILITY

DISPERSED LAYOUTS

Dispersal of facilities, generators, and water purification units increases survivability, but requires more space and makes systems more difficult to construct and operate. The base civil engineer (BCE) and installation commander should agree on a layout plan based on the site's specific requirements, threat conditions, and available resources. See AFPAM 10-219, volume 5, and Annex A to this guide for typical diagrams of dispersed, semi-dispersed, and non-dispersed camp layouts.

PROTECTIVE BUNKERS

Many types are possible. Narrow, 5'-deep trenches or well-sandbagged, narrow bunkers provide good protection and are easy to build. Top cover can increase the protection, but can also collapse and suffocate occupants if not properly designed. To shield a 3' wide trench from fragments, build a top cover of 2 x 4s 12" on center, covered by three 3/4" or four 1/2" layers of plywood, and topped with 2 feet of earth. Wider trenches or protection from direct hits require much heavier construction. See AFPAM 10-219, volume 2, for more detailed information on protective construction.

CAMOUFLAGE, CONCEALMENT AND DECEPTION (CCD)

Included in the Harvest Falcon Housekeeping Set are two packages of CCD assets (UTC XFBP1). Each UTC contains 60 camouflage nets and supporting poles.

EUGENE A. LUPIA, Maj General, USAF
The Civil Engineer

THIS PAGE IS INTENTIONALLY LEFT BLANK.

ANNEX A

SCHEMATIC DIAGRAMS AND LAYOUT DRAWINGS

TABLE OF CONTENTS

FIGURE		PAGE
A1	Typical Base Layout	66
A2	EALS Layout	67
A3	EALS Distance-To-Go Marker Light, Edge Light and PAPI Layout	68
A4	B-1 Revetment	69
A5	Layout, Plan and Elevation for Type B-1 Kit	70
A6	Harvest Eagle Water Distribution System	71
A7	Harvest Eagle Water Distribution System Layout Detail	72
A8	Harvest Falcon Raw Water Supply/Treatment Complex	73
A9	Harvest Falcon Potable Water Distribution System	74
A10	Harvest Falcon Wastewater Collection System	75
A11	Harvest Falcon Wastewater Treatment and Disposal	76
A12	Harvest Eagle Electrical Distribution System	77
A13	Bare Base Power Plant - Typical Layout	78
A14	Harvest Falcon Power Distribution Schematic	79
A15	Dispersed Billeting Block	80
A16	Semi-Dispersed Billeting Block	81
A17	Non-Dispersed Billeting Block	82
A18	1100-Person Billeting Area	83
A19	1100-Person 9-1 Kitchen	84
A20	550-Person 9-1 Kitchen	85

ANNEX A

Figure A1. TYPICAL BASE LAYOUT

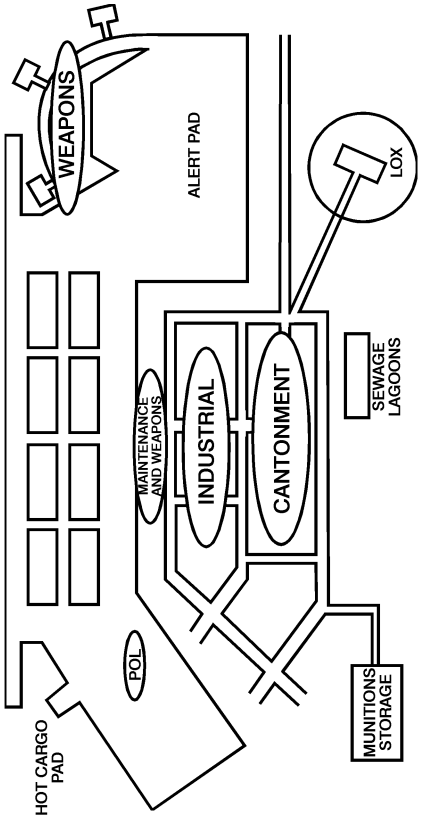

ANNEX A

Figure A2. EMERGENCY AIRFIELD LIGHTING SYSTEM GENERAL LAYOUT

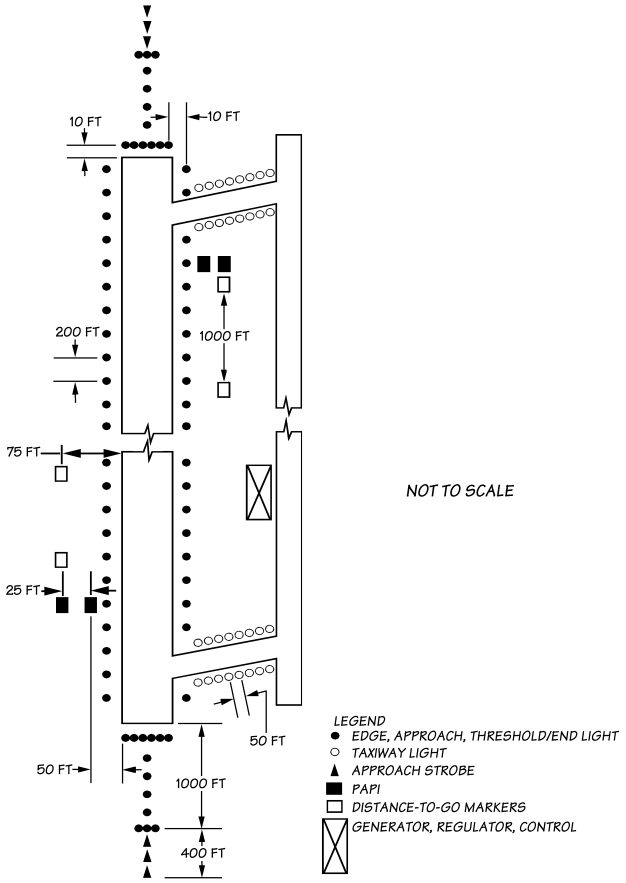

Figure A3. DISTANCE-TO-GO MARKER LIGHT, EDGE LIGHT AND PAPI LAYOUT

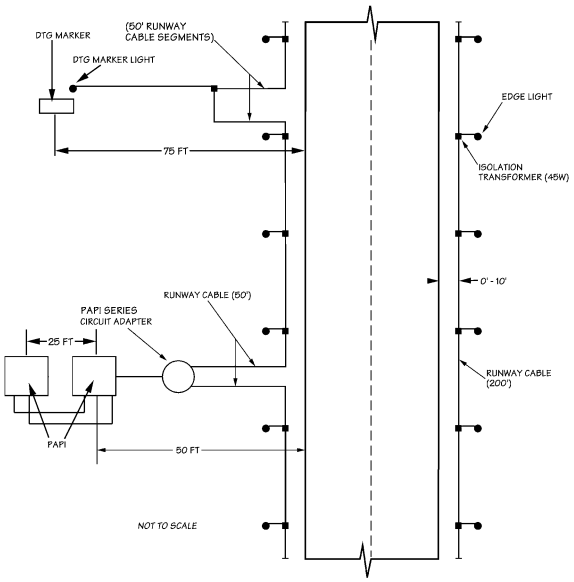

ANNEX A

Figure A4. B-1 REVETMENT

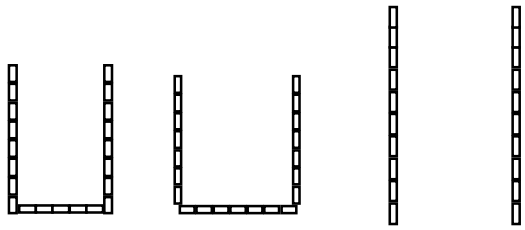

Revetment for F-15, F-16, F-117
Side: 8 sections, 96'
End: 5 sections, 60'

Revetment for A-10, F-111
Side: 7 sections, 84'
End: 7 sections, 84'

Flow-Thru Revetment for Integrated Combat Turns
Side: 10 sections, 120'
Center-to-center spacing:
100' for F-15, etc.
120' for A-10, F-111

NOTES:

1. If multiple "U" shaped revetments are constructed side by side or back to back,allow three kits for each four revetted spaces.
2. Site revetments far enough from the taxiway to provide wingtip clearance for aircraft that taxi by. Minimum distance from taxiway centerline to front edge of revetment depends on the type of aircraft that will likely use the taxiway, as follows:

Fighters and attack aircraft:	65'
Tankers, cargo planes except C-5s:	135'
Heavy Bombers, C-5s, 747s:	165'

3. Site revetments so that front end does not face any other aircraft parking area to provide a clear zone for forward-firing munitions on the revetted aircraft.
4. Verify configurations and spacing with flying unit commander prior to construction.

Figure A5. LAYOUT, PLAN AND ELEVATION FOR TYPE B-1 KIT

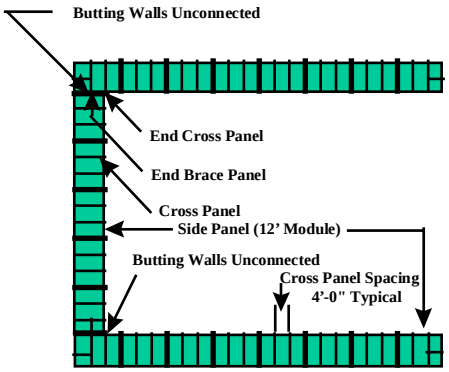

TYPICAL REVETMENT PLAN

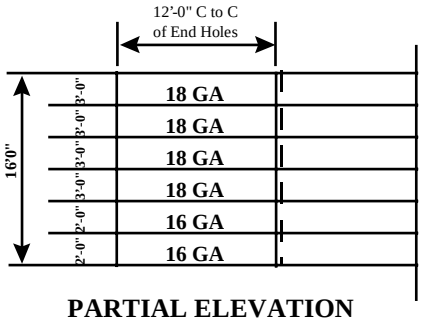

PARTIAL ELEVATION

ANNEX A

Figure A6. HARVEST EAGLE WATER DISTRIBUTION SYSTEM

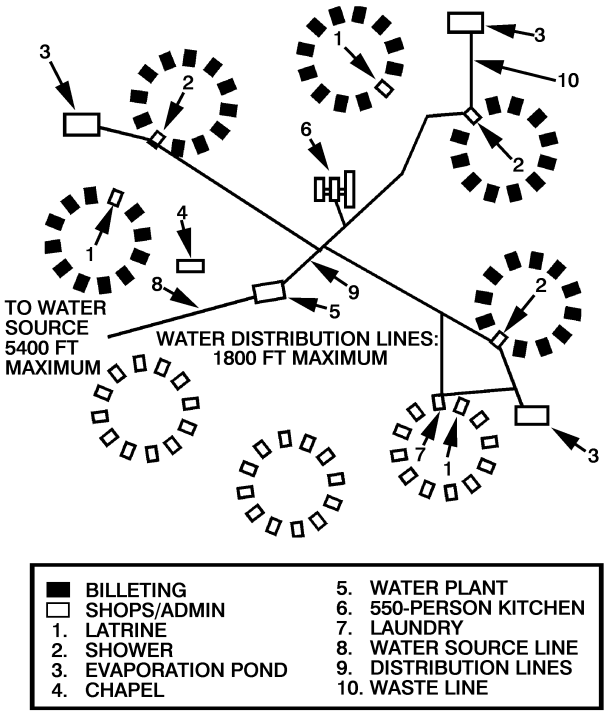

Figure A7. HARVEST EAGLE WATER DISTRIBUTION SYSTEM LAYOUT DETAIL

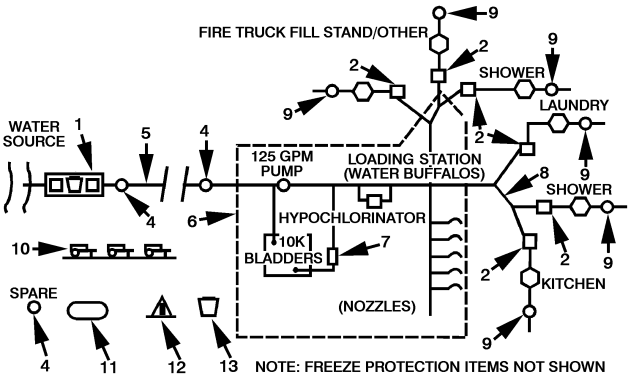

1. TEMPER TENT
2. 3000 GALLON ONION TANK
3. 600 GPH ROWPU
4. 125 GPM PUMP
5. 4" DIA. COLLAPSABLE HOSE
6. STORAGE/DISTRIBUTION SYSTEM
7. BACK-PRESSURE REGULATOR
8. CONNECTION KIT
9. WASTE DISPOSAL UNIT
10. 400 GAL. WATER BUFFALO W/CHILLER
11. SEMI-TRAILER MOUNTED FABRIC TANK, 4750 GAL.
12. LYSTER BAG
13. 5 GALLON JUG

Figure A8. HARVEST FALCON RAW WATER SUPPLY/TREATMENT COMPLEX

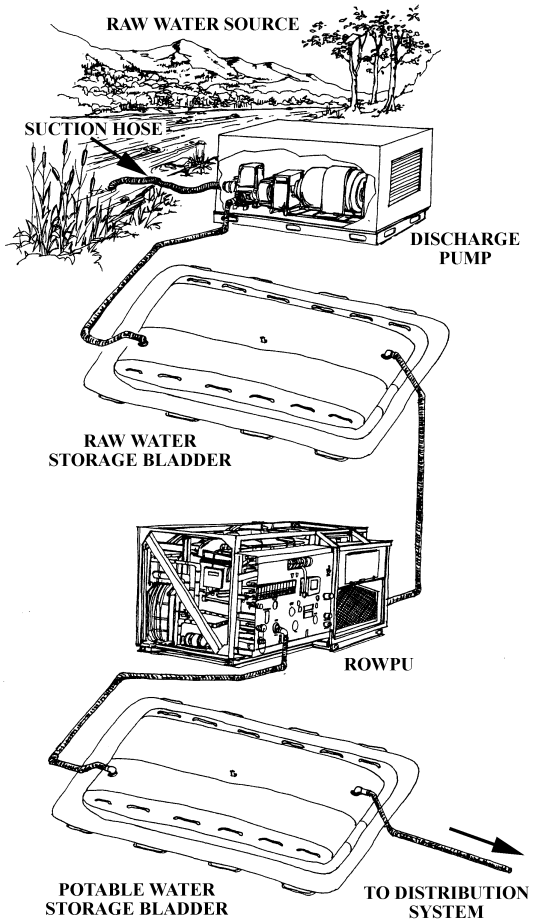

Figure A9. HARVEST FALCON POTABLE WATER DISTRIBUTION SYSTEM

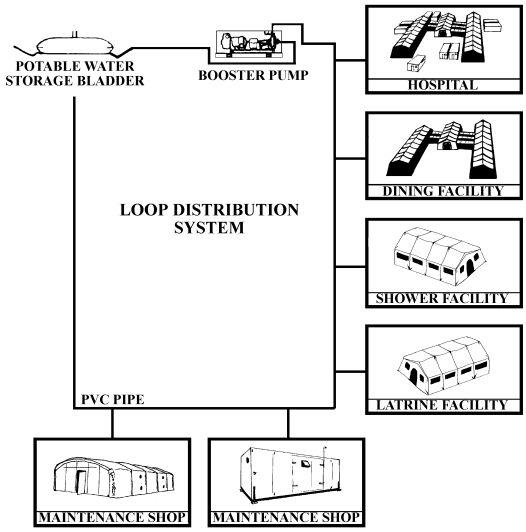

ANNEX A

Figure A10. HARVEST FALCON WASTEWATER COLLECTION SYSTEM

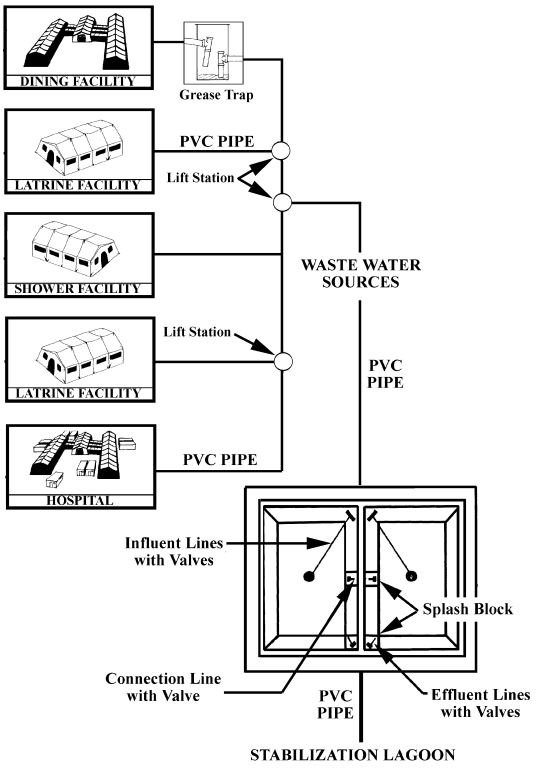

Figure A11. HARVEST FALCON WASTEWATER TREATMENT AND DISPOSAL

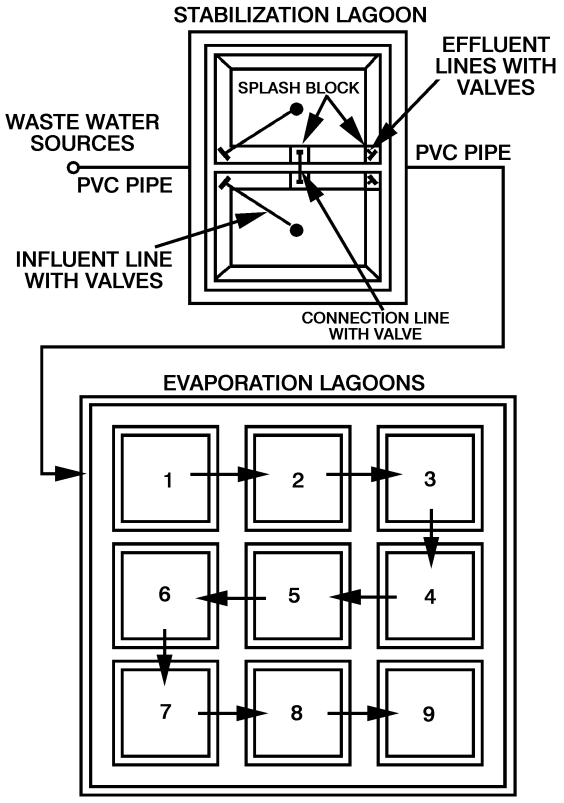

ANNEX A

Figure A12. HARVEST EAGLE ELECTRICAL DISTRIBUTION SYSTEM

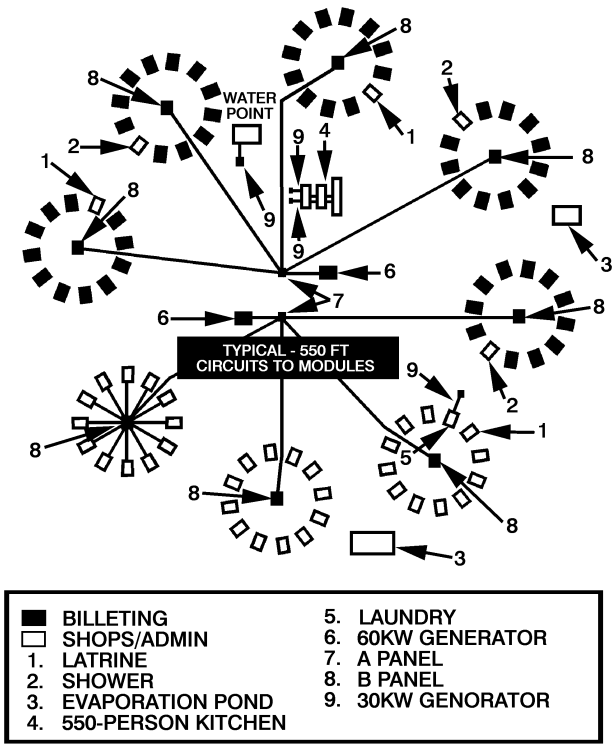

Figure A13. BARE BASE POWER PLANT—TYPICAL LAYOUT

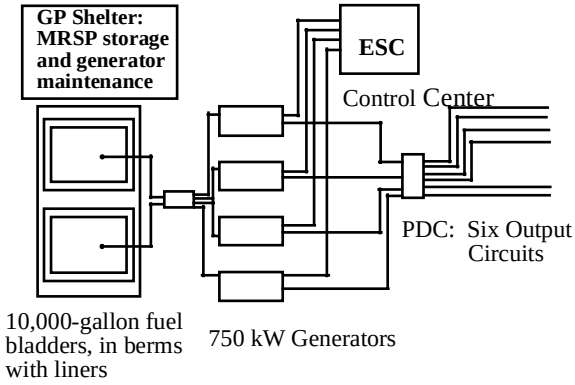

NOTES:

1. Plant size depends on load; assume 2.7 kW per person.
Medical facilities require additional power.
2. In high threat area, use smaller, dispersed plants and
looped primary circuits.
3. Plant area needs physical security, noise isolation, and
fuel truck access.

Figure A14. HARVEST FALCON POWER DISTRIBUTION SCHEMATIC

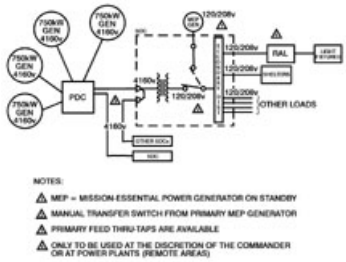

Figure A15. DISPERSED BILLETING BLOCK

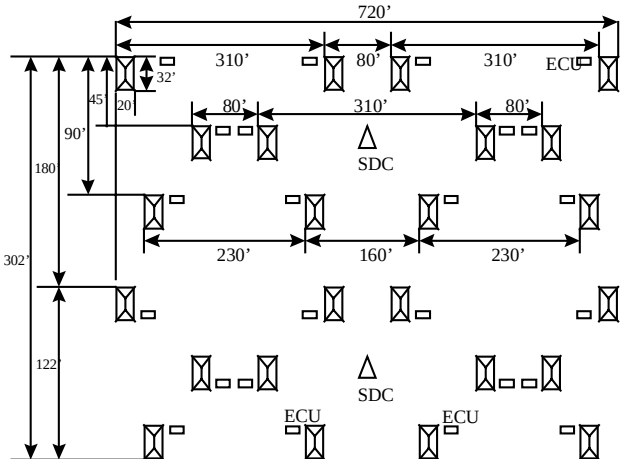

24 TENTS, 2 SDCs, 288 PEOPLE

Figure A16. SEMI-DISPERSED BILLETING BLOCK

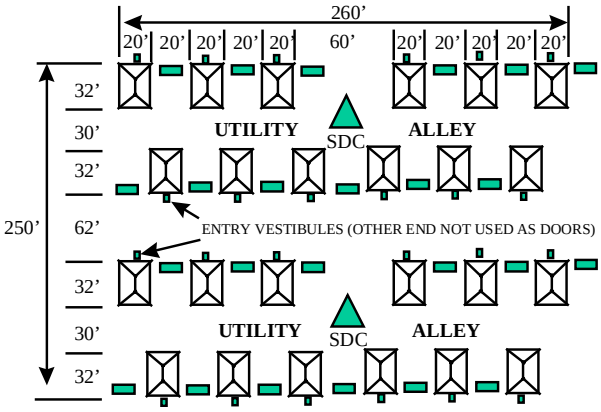

24 TENTS, 2 SDCs, 288 PEOPLE

Figure A17. NON-DISPERSED BILLETING BLOCK

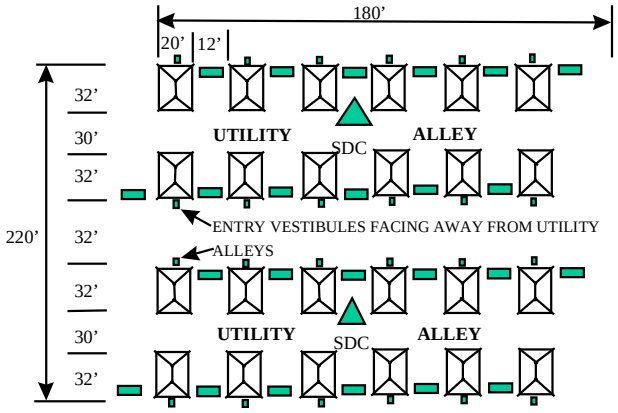

24 TENTS, 2 SDCs, 288 PEOPLE

ANNEX A

Figure A18. 1100-PERSON BILLETING AREA

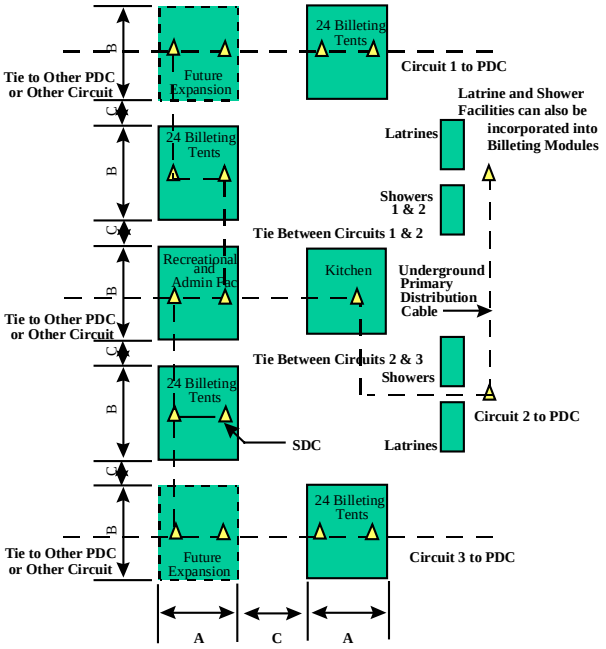

Dispersed Layout:	**A = 302' B = 720' C = 150'**
Semi-Dispersed Layout:	**A = 250' B = 260' C = 150'**
Non-Dispersed Layout:	**A = 230' B = 180' C = 60'**

Figure A19. 1100-PERSON 9-1 KITCHEN

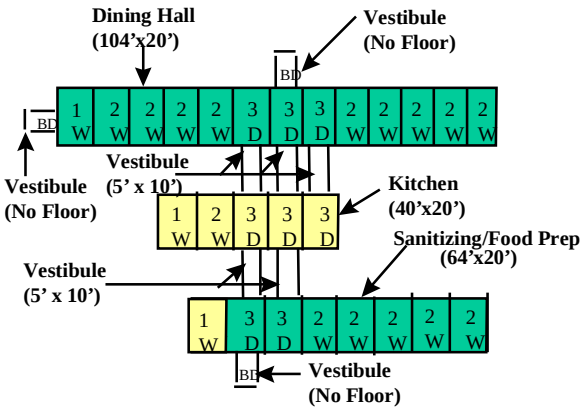

FLOOR LAYOUT PLAN

LEGEND
1 End Section
2 Extendable Frame
3 Extendable Door Section Frame
W Window
D Door
BD Bump thru door
Screen Room Ventilation

FLOOR CONSTRUCTION:
Each section is 8' x 20'
Floored vestibules are 5' x 10'

FLOOR MATERIALS:
2' x 4' x 10' @ 16" OC - 435 each
4' x 8' x 3/4" plywood - 150 sheets
12 penny nails - 75 pounds
6 or 8 penny nails - 100 pounds

ANNEX A

Figure A20. 550-PERSON 9-1 KITCHEN

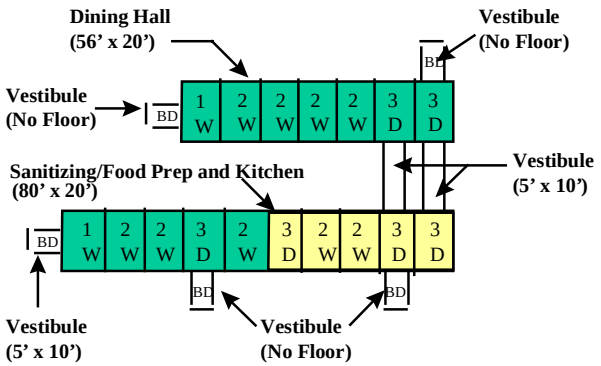

FLOOR LAYOUT PLAN

FLOOR CONSTRUCTION:
Each section is 8' x 20'
Floored vestibules are 5' x 10'

FLOOR MATERIALS:
2' x 4' x 10' @ 16" OC - 300 each
4' x 8' x 3/4" plywood - 100 sheets
12 penny nails - 40 pounds
6 or 8 penny nails - 60 pounds

LEGEND
1 End Section
2 Extendable Frame
3 Extendable Door Section Frame
W Window
D Door
BD Bump thru door
Screen Room Ventilation

THIS PAGE IS INTENTIONALLY LEFT BLANK.

ANNEX B

STANDARD HARVEST EAGLE AND HARVEST FALCON SETS

This annex summarizes the bare base assets contained in typical Harvest Eagle and Harvest Falcon sets. For detailed planning, coordinate with theater CE and LG planners to ensure this information is current and complete. Keep in mind the contents of these sets may be altered periodically due to equipment upgrades and planning changes.

TABLE OF CONTENTS

Page

Harvest Falcon Housekeeping Set 88
Harvest Falcon Industrial Operations Set 89
Harvest Falcon Initial Flightline Set 90
Harvest Falcon Follow-On Flightline Set 91
550-Person Harvest Eagle Set 92
275-Person Harvest Eagle Set (PACAF) 93

ANNEX B

HARVEST FALCON HOUSEKEEPING SET (XFBKA)

ASSET	QTY
Water Production Package	1
Initial Water Distribution (XFB12)	1
Generators, 60kW MEP-006	4
Generators, 100kW MEP-007	3
Generators, 750kW MEP-012A	4
Primary Cable Skids	4
Secondary Distribution Centers	20
Power Plant ESC/PDC/SDC/Bladder Set	1
Remote Area Light Sets	5
Environmental Control Units	150
TEMPER Tents, Admin	16
TEMPER Tents, Billeting	92
TEMPER Tents, Briefing	2
TEMPER Tents, Laundry	2
TEMPER Tents, Mortuary	1
GP Shelters, General Use	3
Field Latrines & Tents	6
Shower/Shaves & Tents	4
9-1 Kitchen	1
Camo Net/Pole Pallets	2
Light Carts	20
Primary Distribution Center	1

ANNEX B

HARVEST FALCON INDUSTRIAL OPERATIONS SET (XFBRB)

ASSET	QTY
Water System, Standard Package	1
Water Source Run (If Needed)	1
Water High Threat Additive (If Needed)	1
Generator, 750kW MEP-012A	1
Fuel Bladder, 10,000 Gallon	1
Secondary Distribution Centers	4
Environmental Control Units	42
8000 SF FSTFS, General Use	3
8000 SF FSTFS, Packing and Crating	1
8000 SF FSTFS, Supply	1
4000 SF FSTFS, Vehicle Ops/Maint	2
ESCs, General Use	5
ESCs, Tactical Exchange	2
ESCs, Supply	2
GP Shelters, General Use	2
GP Shelters, CE Shops	2
TEMPER Tents, Admin	4
TEMPER Tents, CE Shops	9
TEMPER Tents, Chapel	1
TEMPER Tents, Mortuary	1
TEMPER Tents, Multipurpose	4
TEMPER Tents, Tac. Field Exchange	2
Field Latrines and Tents	6
Mobile Kitchen Trailers	2

ANNEX B

HARVEST FALCON INITIAL FLIGHTLINE SET (XFBS1)

ASSET	QTY
Emergency Airfield Lighting System	1
Mobile Aircraft Arresting System	1
BAK-12 Systems (2 energy absorbers ea)	1
B-1 Revetment Kits	42
Generators, 60kW MEP-006	2
Secondary Distribution Centers	8
Environmental Control Units	42
TEMPER Tents, Alert Billeting	3
TEMPER Tents, Fire Station	3
8000 SF FSTFS, General Use	1
8000 SF FSTFS, Propulsion Shop	1
4000 SF FSTFS, General Use	2
ESCs, General Use	3
ESC, Avionics	1
ESC, Bearing Cleaning	1
ESC, Electrical Maintenance	1
ESC, Fuels Lab	1
ESC, Life Support	1
ESC, NDI Lab	2
ESC, Parachute Shop	1
ESC, Pneudraulic/Environmental	2
ESC, Aircraft Wheel/Tire Shop	1
GP Shelters, General Use	9
GP Shelters, Power/Non-power AGE	2
Aircraft Hangars	2
Flightline Fire Extinguishers, 150 lb	24
Field Latrines and Tents	2
Light Cart	2

ANNEX B

HARVEST FALCON FOLLOW-ON FLIGHTLINE SET (XFBS2)

ASSET	QTY
Secondary Distribution Centers	4
Environmental Control Units	12
ESC, Avionics	1
ESC, Life Support	1
ESC, Electrical Maintenance	1
GP Shelter, General Use	1
GP Shelter, Power/Non-power AGE	2
GP Shelter, Propulsion	1
Aircraft Hangar	1
Field Latrines and Tents	2
Flightline Fire Extinguishers, 150 lb	18

ANNEX B

550-PERSON HARVEST EAGLE SETS

The 550-person Harvest Eagle housekeeping UTC is a stand-alone package for supporting additional personnel at an existing warm-weather installation. A separate cold weather package, UTC XFBCW, is available to provide diesel-fueled tent heaters if needed. The utilities package provides supplemental assets needed for longer-term deployments. When combined with the XFBR3 housekeeping set, the two Harvest Eagle UTCs together are approximately equivalent to one half of a Harvest Falcon XFBKA housekeeping set.

ASSET	XFBR3 HOUSE-KEEPING	XFFLU UTILITIES
ROWPU	1	
Water Distribution System	1	
Generators, 30kW MEP-005	3	
Generators, 60kW MEP-006	2	
Generators, 750kW		2
Primary Cable Skids		2
Secondary Distribution Cen		9
Power Plant ESC/PDC Sets		1
Fuel Bladders, 10,000 Gallon		2
Remote Area Light Sets	1	1
Environmental Control Units		78
TEMPER Tents, Admin	15	
TEMPER Tents, Chapel	2	
TEMPER Tents, Billeting	48	
TEMPER Tents, CE Shops	3	
TEMPER Tents, Laundry	1	
TEMPER Tents, Mortuary	1	
TEMPER Tents, Supply	3	
Field Latrines & Tents	2	
Shower/Shaves & Tents	2	
9-1 Kitchen (550-Person)	1	

ANNEX B

PACAF 275-PERSON HARVEST EAGLE HOUSEKEEPING SET (XFFF6)

ASSET	QUANTITY
ROWPUs	1
Water Bladders, 3000 gallon	3
Generators, 30kW MEP-005	1
Generators, 60kW MEP-006	4
Lightalls	4
Light Pole Sets	6
GP Medium Billeting Tents	28
Tent Heaters, 70,000 BTU	28
Plywood Sheets, 4 x 8 x 3/4"	500 (16 per tent)
Lumber, 1 x 6, linear feet	2880 (96 per tent)
Lumber, 2 x 4, linear feet	9600 (320 per tent)
Equipment and Supplies	

PACAF 275-PERSON HARVEST EAGLE KITCHEN SET (XFFF7)

ASSET	QUANTITY
150 Cubic Foot Refer Boxes	4
Ice Machine	1
GP Medium Storage Tents	2
GP Large Dining Tents	2
M-1948 Kitchen Tents	2
Equipment and Supplies	

THIS PAGE IS INTENTIONALLY LEFT BLANK.

ANNEX C

WATER SYSTEM COMPONENTS

HARVEST EAGLE

Components	Qty
Raw water hose, 4”	190’
Raw water hose, 2”	5100’
Potable water hose, 4”	160’
Potable water hose, 2”	2370’
Potable water hose, 1.5”	150’
Wastewater hose, 2”	1400’
3000-gallon storage bladder, raw water	2
3000-gallon storage bladder, potable water	6
10,000-gallon bladder, potable water	2
Raw water pumps, diesel, 125 gpm	2
Potable water pumps, diesel, 125 gpm	4
Wastewater pumps, electric, 35 gpm	2
ROWPU	1
Hypochlorinator	1

ANNEX C

WATER SYSTEM COMPONENTS (cont)

HARVEST FALCON

Water Production Package (WPP)	Qty
ROWPU, 600 gph	2
Onion Tank (ROWPU support), 3000 gal	4
Bladder, Potable, 20,000 gal	2
Bladder, Raw, 20,000 gal	1
Water Trailer (Buffalo), 400 gal	1

Initial Water Distribution Package (IWDP)	Qty
Bladder, Potable, 10,000 gal	2
Bladder, Raw, 20,000 gal	1
Raw Water Pump, Diesel, 250 gpm	2
Potable Water Pumps, Electric, 35 gpm	2
Wastewater Pump, Electric, 35 gpm	5
Hypochlorinator	1
Back Pressure Regulator	1
Water Trailer (Buffalo), 400 gal	4
Raw Water Hose, Discharge, 4”	5,440’
Raw Water Hose, Discharge, 2”	50’
Raw Water Hose, Suction, 4”	120’
Potable Water Hose, Discharge, 4”	4,000’
Potable Water Hose, Discharge, 2”	2,350’
Potable Water Hose, Discharge, 1 ½”	150’
Potable Water Hose, Suction, 4”	80’
Wastewater Hose, 2”	1,400’

ANNEX C

WATER SYSTEM COMPONENTS (cont)

HARVEST FALCON

Standard Package (SP)	**Qty**
ROWPU, 600 gph	1
Onion Tank (ROWPU support) 3,000 gal	2
Bladder (Raw Water), 20,000 gal	4
Bladder (Potable Water), 20,000 gal	4
Raw Water Hose, Discharge, 4”	1,000’
Potable Water Pipe, 4” (485 sections)	9,215’
Potable Water Pipe, 2” (85 sections)	1,615’
Potable Water Pipe, 1 ½” (260 sections)	4,940’
Wastewater Suction Hose, 20’ lengths Quick Disconect, 2”	100’
Wastewater Discharge Hose, Quick Disconnect, 2”	1,200’
Auxiliary Pump, 50 gpm	2

Source Run Additive Package (SRAP)	**Qty**
Raw Water Pump, Diesel, 250 gpm	1
Raw Water Pipe, 6”, (560 sections)	10,640’
Raw Water Discharge Hose, 4”	5,280’
Raw Water Suction Hose, 20’ lengths, 6”	80’

ANNEX C

WATER SYSTEM COMPONENTS (cont)

HARVEST FALCON

High Threat Additive Package (HTAP)	Qty
Wastewater Lift Station, Electric*, 180 gpm	1
Potable Water Pump, Electric, 130 gpm	2
Hypochlorinator	1
Back Pressure Regulator	1
Wastewater Pipe* (20-19' sections), 6"	380'
Wastewater Pipe* (360-19' sections), 4"	6,840'
Wastewater Pipe* (150-19' sections), 3"	2,850'
Wastewater Pipe* (85-19' sections), 2"	1,615'
Potable Water Pipe (450-19' sections), 4"	8,550'
Potable Water Pipe (290-9' sections), 3"	5,510'
Potable Water Pipe (20-19' sections), 2"	380'
Potable Water Pipe (90-19' sections), 1 ½"	1,710'
Potable Suction Hose (4-20' lengths), 4"	40'

*Can be tailored out if Wastewater Package not deployed.

Waste Water Package (WWP)	Qty
Waste Water Lift Station, Electric, 180 gpm	4
Waste Water Pipe (770 sections), 4"	14,630'
Waste Water Pipe (230 sections), 3"	4,370'

ANNEX D

BARE BASE VEHICLE PACKAGES

BARE BASE SUPPORT PACKAGE (UFSWA)

Vehicle Type	Qty	Vehicle Type	Qty
Container Handler	1	Ambulance 4x4	2
Trk Refrigerated	1	Trk Highlift 9T	1
Trk Dump 5T	1	Trk Fuel 1,200 Gal	2
Trk Highreach 45ft	1	Trk Dump 8cy	6
Trac Tow Bobtail	3	Trl Manhole Cln	1
Trl Trencher	1	Crane 7.5T	1
Trac Industrial	1	Dozer D7	1
Clnr Vac Multi	1	Sweeper, Towed	1
Ldr Scoop W/Backhoe	1	Ldr Scoop 2.5cy	1
Ldr Scoop 4cy	1	Grader Sz2	1
Roller Vibr	1	Dist Wtr 1,500 Gal	1
Excavator, Wheeled	1	Trencher, Pneu Tire	1
Forklift 4k Std	3	Forklift 6k R/T	5
Forklift 6k Std	3	Forklift 10k Std	2
Forklift 10k A/T	3	Forklift 13k A/T	3
Trailer M105	1	Trk Fire P-19	2
Trk Fire P-10	1	Trk Fire P-20	1
Trk Fuel R-9	2	Trac Tow MB-4	1
Trl Fuel A1B 600 Gal	1		

ANNEX D

BARE BASE VEHICLE PACKAGES (cont)

M-SERIES BARE BASE SUPPORT PACKAGE (UFSWB)

Vehicle Type	Qty	Vehicle Type	Qty
Trk Utility, M1009	3	Trk Utility, M10026	6
Trk Cargo, M1008	1	Trk Shelter, M1028	1
Trk Cargo 2.5T	9	Trl Cargo 3/4T	3
Trk Wrecker, M936	1	Trac Tow, MB-4	1
Trl Wtr 400 Gal	9		

GENERAL PURPOSE PACKAGE (UFSWC)

Vehicle Type	Qty	Vehicle Type	Qty
Bus 28 Pax	3	Multistop	3
Trk P/U 3 Pax 4x4	6	Trk P/U 6 Pax 4x4	5
Trk Cargo 2.5T	3		

ORGANIC MOVEMENT SUPPORT PACKAGE (UFSWD)

Vehicle Type	Qty	Vehicle Type	Qty
Trk Trac 10T 6x4	9	Trailer Tilt 22T	2
Trailer Semi 20T 25ft	6	Trailer Semi 20T 40ft	6

ANNEX D

BARE BASE VEHICLE PACKAGES (cont)

FIGHTER AIRCRAFT SUPPORT PACKAGE (UFSWE)

Vehicle Type	Qty	Vehicle Type	Qty
Multistop	2	Trk Trac 10T 6x4	2
Trailer Semi 20T 25ft	3	Trac Bobtail	9
Trk Utility, M1026	4	Trk Fuel R-9	2
Trac Tow, MB4	3		

BOMBER/TANKER AIRCRAFT SUPPORT PACKAGE (UFSWF)

Vehicle Type	Qty	Vehicle Type	Qty
Bus 28 Pax	2	Multistop	4
Trk Trac 10T 4x6	6	Trailer Semi 20T 40ft	8
Trac Bobtail	9	Trk Utility, M1026	4
Trk Fuel R-9	2	Trk Wtr Demin A-2	4
Trac Tow MB2	2		

CARGO AIRCRAFT SUPPORT PACKAGE (UFSWG)

Vehicle Type	Qty	Vehicle Type	Qty
Multistop	2	Trk Trac 10T 4x6	4
Semi 20T 25ft Trailer	1	Trailer Semi 20T 40ft	3
Trac Bobtail	3	Loader AC 25K	3
Loader AC 40K	2	Forklift 10K A/T	4
Loader AC Widebody	2	Trk Utility, M1026	4
Trk Fuel R-9	2	Trac Tow MB2	2

ANNEX D

BARE BASE VEHICLE PACKAGES (cont)

AIRCRAFT SQUADRON ADDITIVE PACKAGE (UFSWH)

Vehicle Type	Qty	Vehicle Type	Qty
Multistop	12	Trk P/U 3 Pax 4x4	12
Trk P/U 6 Pax 4x4	14		

AIR HOSPITAL PACKAGE (UFSWJ)

Vehicle Type	Qty	Vehicle Type	Qty
Bus Ambulance	2	Ambulance 4x4	1

RAPID RUNWAY REPAIR PACKAGE (UFSWK)

Vehicle Type	Qty	Vehicle Type	Qty
Trk Dump 8cy	4	Roller Vibr	1
Excavator Wheeled	1		

ANNEX II

BARE BASE ASSET TECHNICAL ORDER LISTING

TO NUMBER	TITLE
00-105-12	Water Distribution System, Bare Base
00-105-12-1	Water Distribution System, Bare Base
00-105-12-1CL-1	Water Distribution System, Bare Base
00-105-12CL-1	Water Distribution System, Bare Base
00-105L-2	Water Distribution System, Harvest Falcon
36A11-18-24-1	Wastewater Disposal Trailer
37A12-15-1	Fuel/Water Bladders, All Sizes
40W4-13-25-1	ROWPU (trl mtd) 600 GPH
40W4-13-41/-44	ROWPU (skid mtd) 600 GPH
40W4-14-1	Water Distribution System, Harvest Eagle
00-105A-12	Electrical Distribution System, Bare Base
35C1-2-1-301	Electrical Distribution System, HF
35C1-2-1-331	Electrical Distribution System, HE
35C2-3-386-1	MEP-016A 3kW Generator
35C2-3-442-1/-4	MEP-007A 100kW Generator
35C2-3-442-11/-14	MEP-007B 100kW Generator
35C2-3-443-1	MEP-009A 200kW Generator
35C2-3-444-1/-4	MEP-006A 60kW Generator
35C2-3-446-1/-4	MEP-005A 30 kW Generator
35C2-3-459-1/-14	MEP-012 750kW Gas Turbine Generator
35C2-3-474-1/-4	MEP-012A 750kW Diesel Generator
35CA1-2-4-7	Primary Distribution Center
35CA1-2-6-1	Primary Distribution Center

ANNEX II

BARE BASE TECHNICAL ORDER LISTING (cont)

TO NUMBER	TITLE
35CA2-2-10-1	Secondary Distribution Center
35CA6-9-1	Equipment Rack
35CA6-1-101	Power Distribution Panel
35F5-5-16-1	Floodlight, TP-5A4-DC
35E2-2-7	AM-2 Aluminum Mat
35E2-3-1	Rapid Runway Repair
35E2-4-1	Repair Quality Criteria for RRR System
35E2-5-1	Crushed Stone RRR System
35E2-6-1	MOS Layout & Marking
35E4-170-2	B-1 Revetment
35E8-2-5-1/-4	BAK-12
35E8-2-10-1/-4	MAAS
35E8-2-11-2	Lightweight Fairlead Beam
35F5-3-17-1/-4	Emergency Airfield Lighting System
35E4-1-131	Aircraft Hangar Configurations
35E4-1-141	GP Shelter Configurations
35E4-94-1	Expandable Shelter Container
35E4-132-1	GP Shelter (Goodyear)
35E4-133-1	Aircraft Hangar (Goodyear)
35E4-169-1/-11	9-1 Kitchen
35E4-183-1	Frame-Supported Tensioned Fabric Structure (FSTFS)
35E5-1-101	Tent, GP Small/Medium/Large
35E4-216-1	New Harvest Falcon Shelter (Dome Shelter)
35E5-6-1/-4	TEMPER Tent

ANNEX II

BARE BASE TECHNICAL ORDER LISTING (cont)

TO NUMBER	TITLE
35E7-4-27-1	Portable Water Heater(M-80) & Circulatory
35E7-6-19-1/-4	120,000 BTU Arctic Heater
35E9-163-1	Air Conditioner, Type A/E 32C-39
35E9-189-1/-4	Environmental Control Unit
35E9-274-1/-4	1200-cf Refer
35E9-276-1/-4	10K Condenser for 1200-cf Refer
35E35-3-1	Shave Stand
35E35-4-1	Shower Facility
35E35-5-1	Field Latrine
40P1-6-2-1/-4	Bath Unit (M-80 Heater, Pump, Shower Stand)
40R7-5-8-1	Refrigeration Unit, Panel Type, 5000BTU
50D1-3-1	Bare Base Laundry Facility
5-1080-200-13&P	Camouflage Netting (Army Technical Manual)
5-4110-240-13 & P	150-cf Refer (Army Technical Manual) (Box only)
5-4520-235-13	Preway 70,000 BTU Space Oil-Fired Tent Heater
9-4110-248-13	5K Condenser for 150-cf Refer
10-4130-239-14	Small Mobile Water Chiller
10-4500-200-13	Heater, Space Radiant Type, M1941

THIS PAGE IS INTENTIONALLY LEFT BLANK.

ANNEX T

SELECTED HARVEST FALCON UNIT TYPE CODES (UTCs)

The following list of UTCs represents Harvest Falcon assets that will commonly require civil engineer support during beddown. Most are used or operated solely by engineer forces.

UTC	Function/Asset Type	Asset Quantities
XFBA5	TEMPER Tent	4
XFBA6	TEMPER Tent	12
XFBB7	TEMPER Tent	48
XFBK3	9-1 Kitchen	1
XFBL8	Shower/Shave w/TEMPER Tent	4
XFBLA	Latrine Unit w/TEMPER Tent	4
XFBW7	ROWPU	3
XFBV5	Laundry	1
XFB12	Initial Water Distribution	1
XFB11	Water Distribution Loop (Pumps)	1
XFB13	Water Distribution System	1
XFBD1	Air Conditioning (ECU)	6
XFBD3	Air Conditioning (ECU)	18
XFBD5	Air Conditioning (ECU)	42
XFBG1	General Purpose Shelter	1
XFBG3	General Purpose Shelter	3
XFBEX	Power Pro Fac (ESC)(PDC)(SDC)	1

ANNEX T

SELECTED HARVEST FALCON UNIT TYPE CODES (UTCs) (cont)

UTC	Function/Asset Type	Asset Quantities
XFBE2	60 kW Generator	4
XFBE3	100 kW Generator	1
XFBE7	750 kW Generator	1
XFBE8	750 kW Generator	3
XFBE9	60 kW Generator	1
XFBEX	Power Production System	1
XFBZ1	TF-1 Light Cart	1
XFBZ2	TF-1 Light Cart	4
XFBEG	Power Cable Reel Skid	2
XFBEF	Primary Distribution Center (PDC)	1
XFBET	Secondary Distribution Center (SDC)	4
XFBEV	Secondary Distribution Center (SDC)	12
XFBYB	Remote Area Lighting (RALS)	1
XFBAA	8000 SF Modular Structure (FSTFS)	1
XFBAB	4000 SF Modular Structure (FSTFS)	1
XFBG5	Expandable Shelter Container (ESC)	1
XFBG6	Expandable Shelter Container (ESC)	3
XFBF1	10,000-Gal Fuel Bladder	1
XFBSH	Aircraft Hangar	1
XFBCM	150 lb Fire Extinguishers	6
XFBCN	150 lb Fire Extinguishers	24
XFBR1	B-1 Revetments	6
XFBYA	Airfield Lighting Set (EALS)	1
XFBCK	BAK-12 Arresting Barrier	1
XFBR4	Mobile Aircraft Arresting System	1